Smart Lock

User Manual

S06

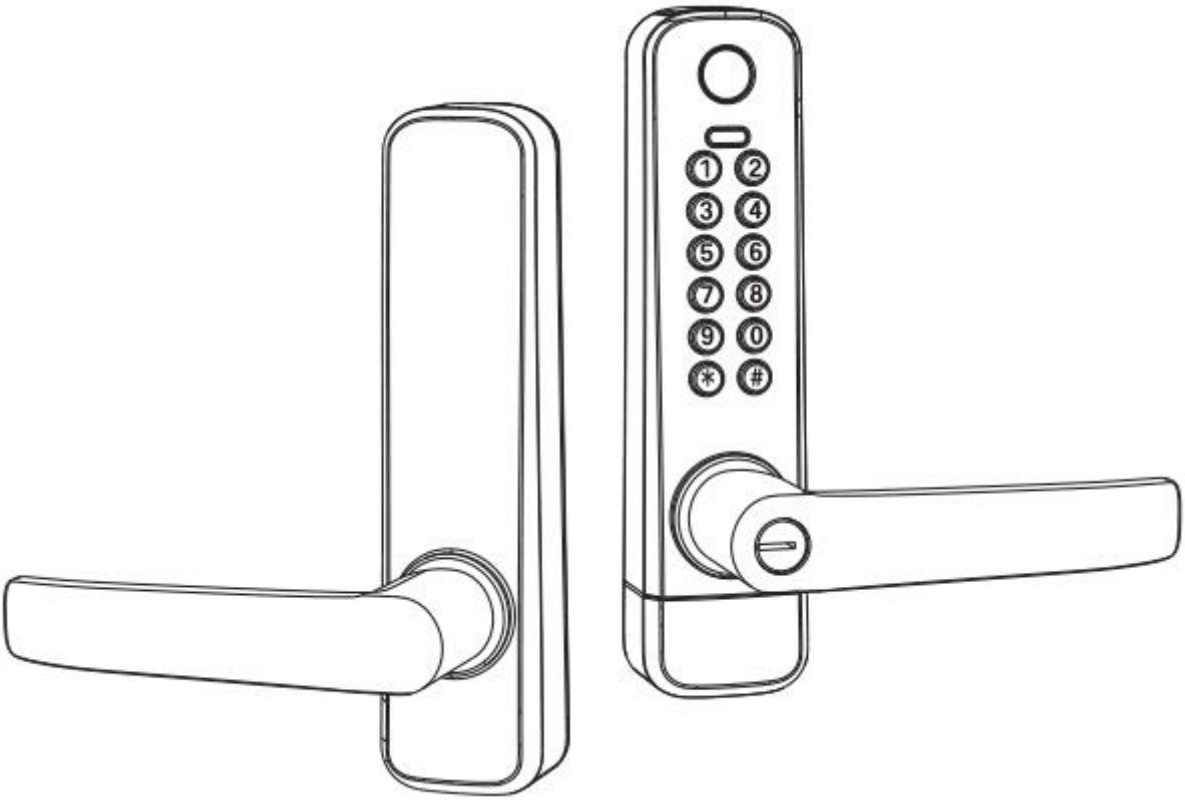

Special Attention:

1. Mechanical keys please keep outdoor, just in case keys lock in doors.
2. Please replace for the battery when low wattage alarm.
3. Reading this manual carefully before installation, and keep it for future reference.

1.Introduction

1.1.Lock structure

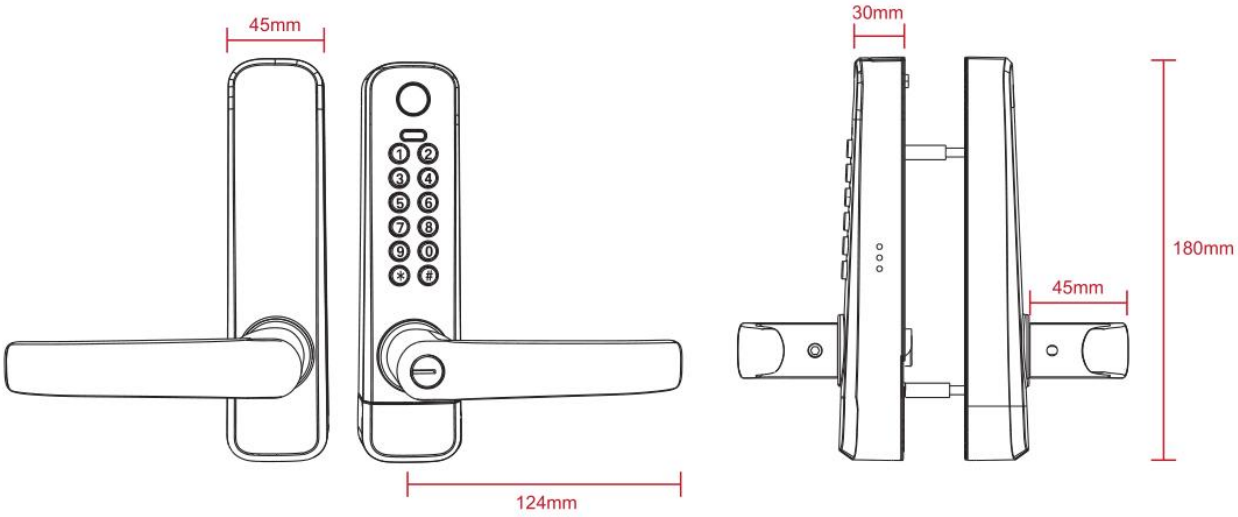

1.2.Packing List

Check the following drawing to check whether the package contains all the parts.

NO	Name	Qty	NO	Name	Qty
1	Front Panel	1	9	Mortise Screws:KM5*10mm (For Aluminum Door)	4
2	Back Panel	1	10	Mortise Screws:KA4*20mm (For Wooden Door)	5
3	Mortise	1	11	Sliding Screw:M5*6.5mm	2
4	Card	3	12	L -shaped Hexagon Wrench	1
5	Mechanical Key	2	13	Screw Stubs:M5*18mm	2
6	Waterproof Rubber Plate	2	14	KM5*20mm Screw	2
7	Strike&Strike Box	1+1	15	KM5*25mm Screw	2
8	User Manual	1	16	60mm Square Shaft	1

1.3.Specifications

Suitable for Models	S06	Doors Applicable	Aluminum door Wooden door
Materials	Aluminum alloy	Working Voltage	3V,1x CR123 Battery
Lock Weight	1KG	Door Thickness to Fit	20-30mm
Unlocking Way	Bluetooth Fingerprint(option) Password Card Mechanical key Gateway(option)	Data Capacity	Fingerprint：200 Password：150 Card：200
Color	Silver Black	Working Temperature	-10℃-55℃
Low Wattage Alarm	Less than 2.4V	Working Humidity	0-95%RH

2.Installation

2.1 Turn the handle

Notice: Adjust the handle according to the direction you open the door.

Front handle

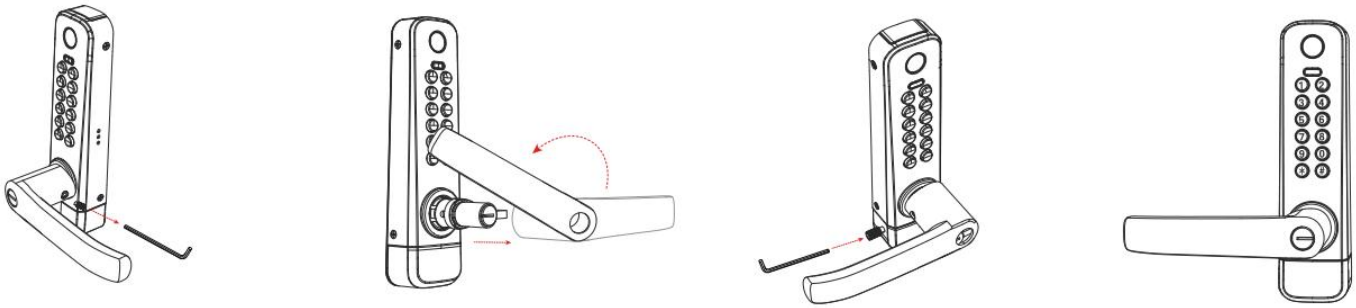

Back handle

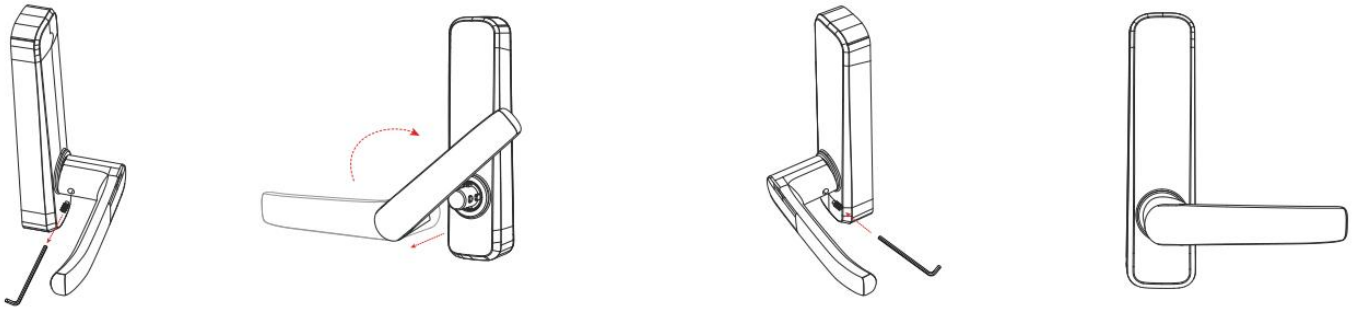

2.2 Installation Diagram

Step 1 Install Mortise

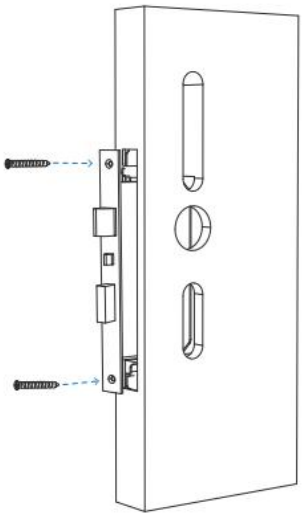

Install the mortise into the door with screws.

Step 2 Install Batteries

1.Remove the screw of the battery cover.
2.Open the battery cover.
3.Insert battery and the battery cover.

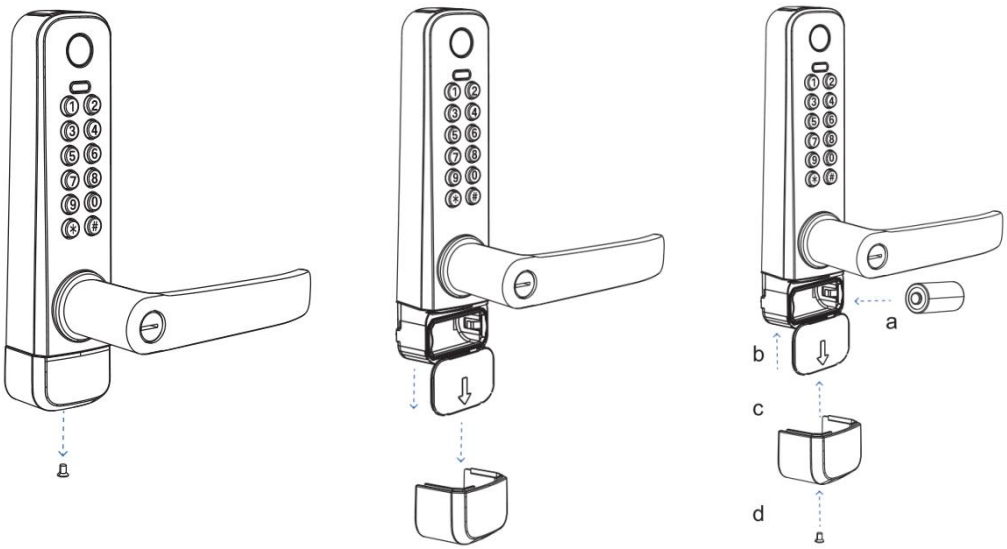

Step 3 Install Exterior Assembly

1.Install the waterproof rubber plate to exterior assembly.
2.Install square shaft into spindle hub,keep the arrow pointing down.
3.Install 2 screw casings.
4.Install the exterior assembly to the door.

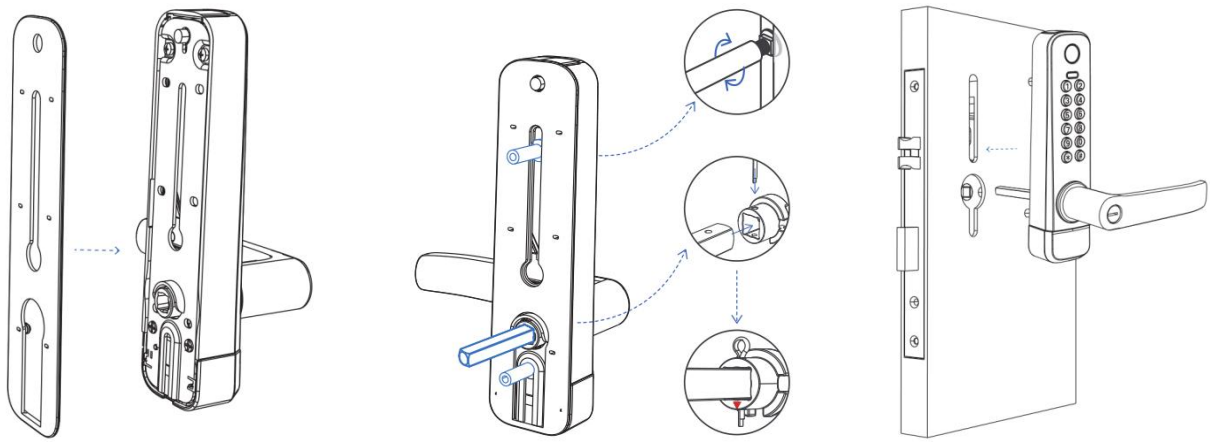

Step 4 Install Interior Assembly

1.Install the waterproof rubber plate.
2.Install 2 screws .
3.Install the back panel cover.
4.Install the handle and 1 screw .Complete Installation.

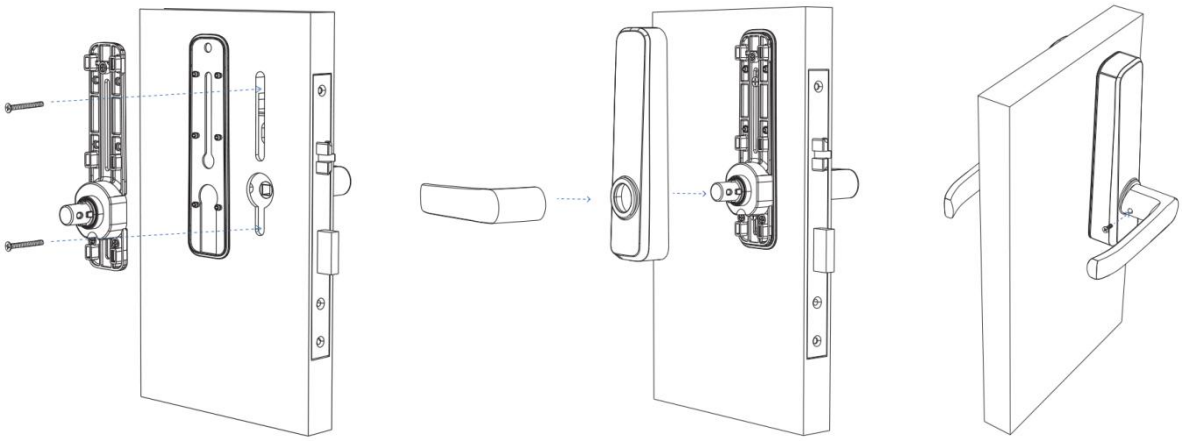

3.Initialization

Note: Please note all date will be erased if you reset your lock to factory default.All entered fingerprint, password, and other data will be cleared.

1. Open the cover plate of the back panel.
2. Long press the reset button until the voice prompt "Please enter initialization password".
3. Release the reset button, and then enter "000#".

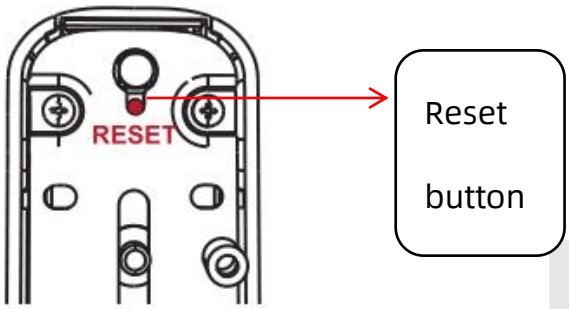

4.APP Operation

4.1.Download

The software (iOS version) can be downloaded from the app store, and the Android version can be downloaded from the application store of Google play.

4.2.Registration

1. please scan the QR code to download the app.
2. You can also search for TTLock in the APP store(Google Play)to download.
3. Register a new account (phone number or email) or login with an existing account.

TTlock users can register the account by mobile phone and Email which currently support 200 countries and regions on the world. The verification code will be sent to user's mobile phone or email, and the registration will be successful after the verification.

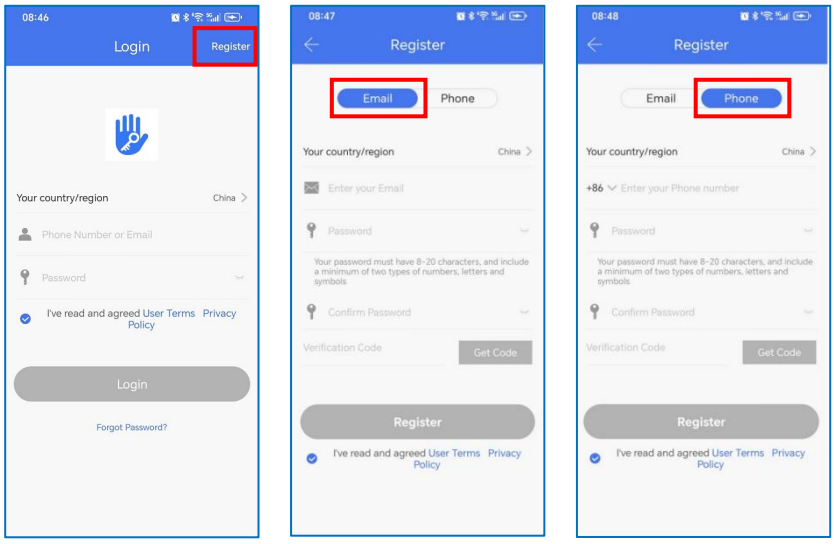

① ② ③

4.3.Login

If you already have an account,choose “Register with Existing Account”and enter the log in page.

1. The system will automatically locate the current country/region you are in. Or you can choose the country/region by yourself.
2. Enter mobile number/ email and password.

If you forget your account password, you can click on "Forgot Password" to reset it, then log in to the app using the new password.

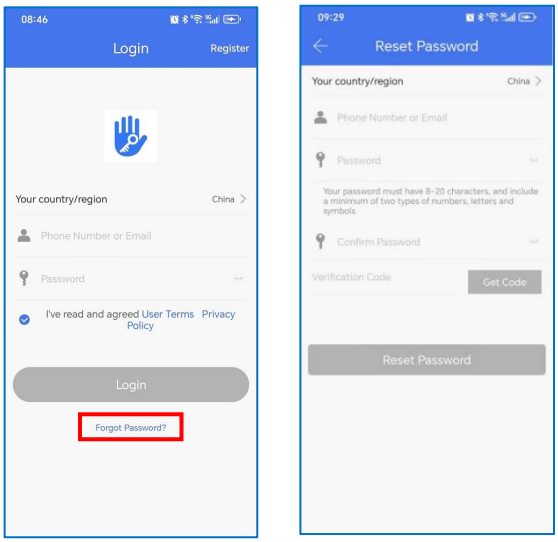

① ②

4.4.Add locks

1. Open the mobile Bluetooth.
2. In the TTLock APP,click "+ Add Lock” ”All Locks”.
3. Touch the lock screen to light.
4. The lock nearby will appear on the phone screen, click "+".
5. Re-name the lock.
6. The lock added successfully.

TTLock supports multiple types of lock devices. The lock needs to be added by the app after entering the add mode. Generally, a lock that has not been added, as long as the lock keyboard is touched, it will enter the add mode. For a lock that has already been added, it needs to be initialized before it can be added again.The default password is 123456 if not added by the phone.

Note:If the lock cannot be added in the above steps, please close the mobile app and Bluetooth, reopen the app and Bluetooth, and repeat the steps to add the lock.

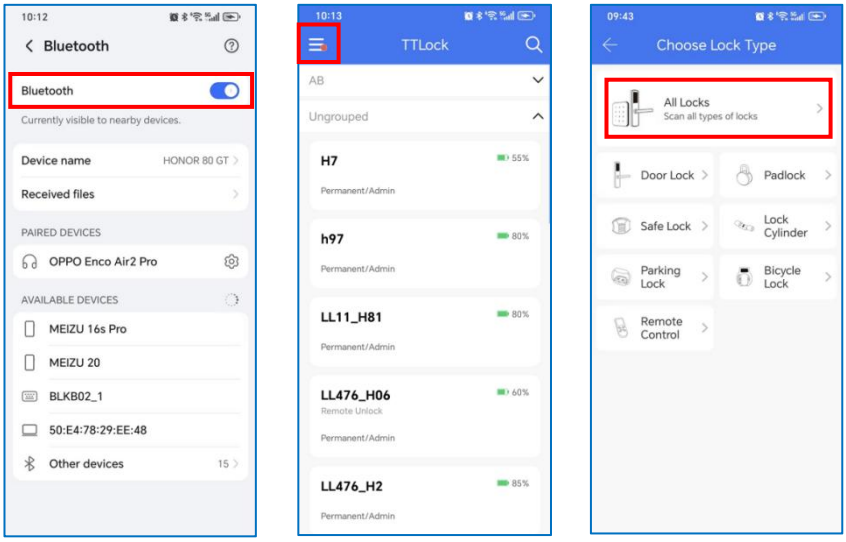

① ② ③

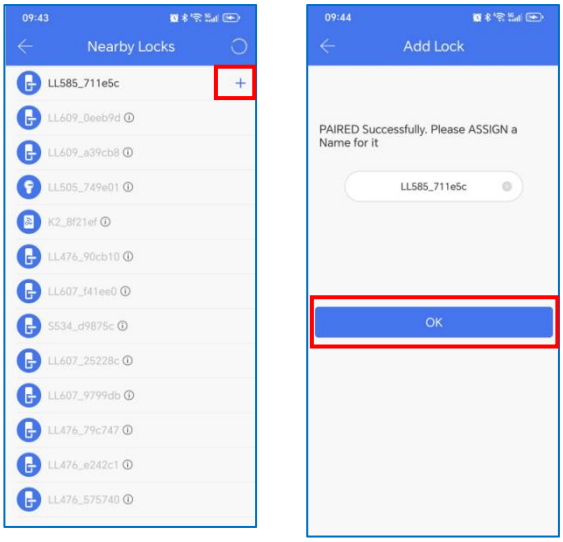

④ ⑤

4.5.Bluetooth Unlock

Make sure there is no problem with Bluetooth communication. After connecting the phone to the door lock as above, Click "to unlock.

Note:the phone is within 5meters from the door lock and there should be no walls or other obstacles in between.

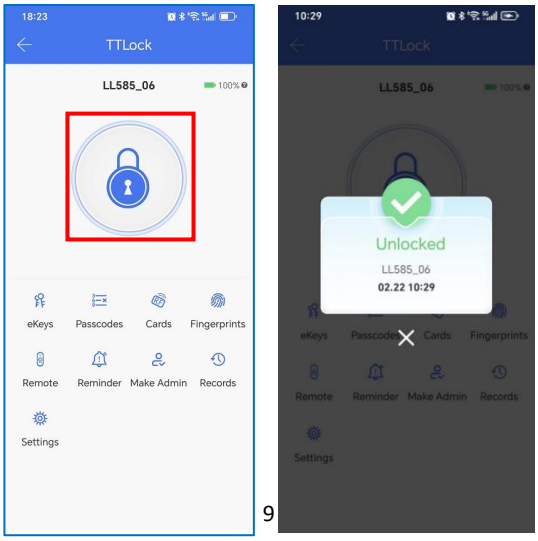

① ②

4.6. Setting Passcode

Passcodes are also a way to unlock. After entering the passcode on the locked keyboard, press the unlock button in the lower right corner to unlock. Passcodes are divided into permanent, time-limited, one-time,permanent, recurring, custom and erase passcodes. You can share the Passcode to other user via WeChat、SMS、Email、Messenger、WhatsApp.

Note:

The time-limited passcode can be used for unlimited times within the validity period. This passcode must be used at least once within 24 hours after Start time, or it will be suspended for security reasons.

2.The one-time passcode must be used within 6 hours from the current time or it will be suspended for security reasons. This passcode can only be used once.

3.This permanent passcode must be used at least Once, within 24 hours from current time, or it will be suspended for security reasons.

4.You can configure your own passcode. It needs to be between 4 - 9 Digits in Length. You can configure the customized passcode via Bluetooth or remotely via network.

5.The recurring passcode can be used for unlimited times within the validity period.

This passcode MUST BE used at least ONCE within 24 Hours after Start Timeor it will be SUSPENDED for Security Reasons.

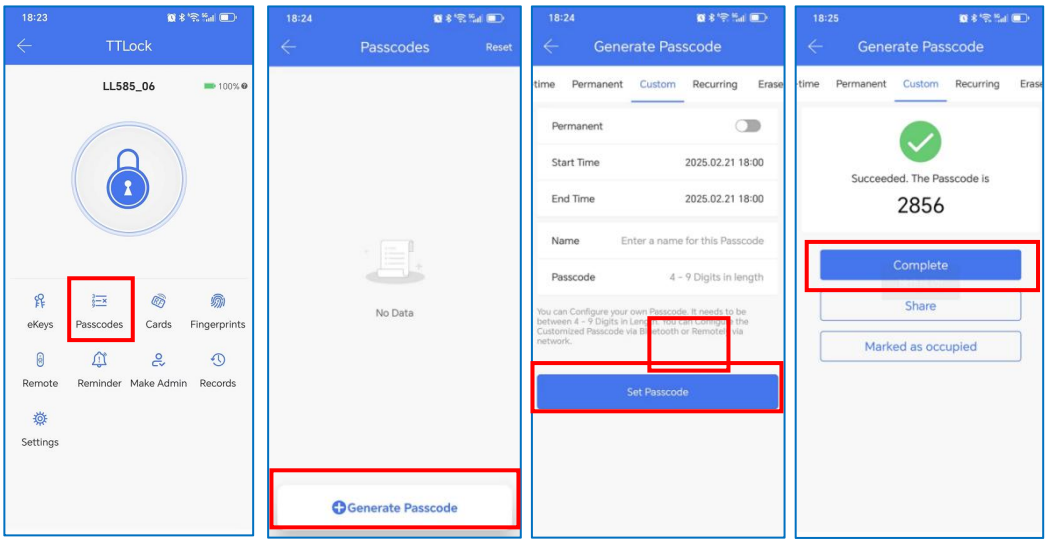

① ② ③ ④

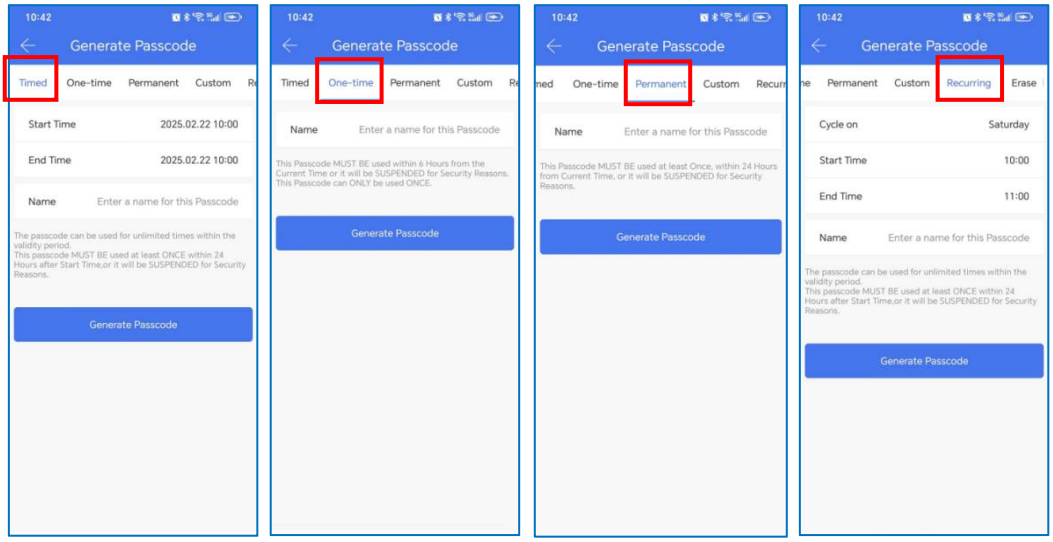

⑤ ⑥ ⑦ ⑧

4.7.Add card

Supports opening doors through various IC cards. Before an IC card is used to open the door, it needs to be added first. The adding process needs to be performed by the app beside the lock.The validity period of the IC can be set, it can be permanent, timed or recurring.

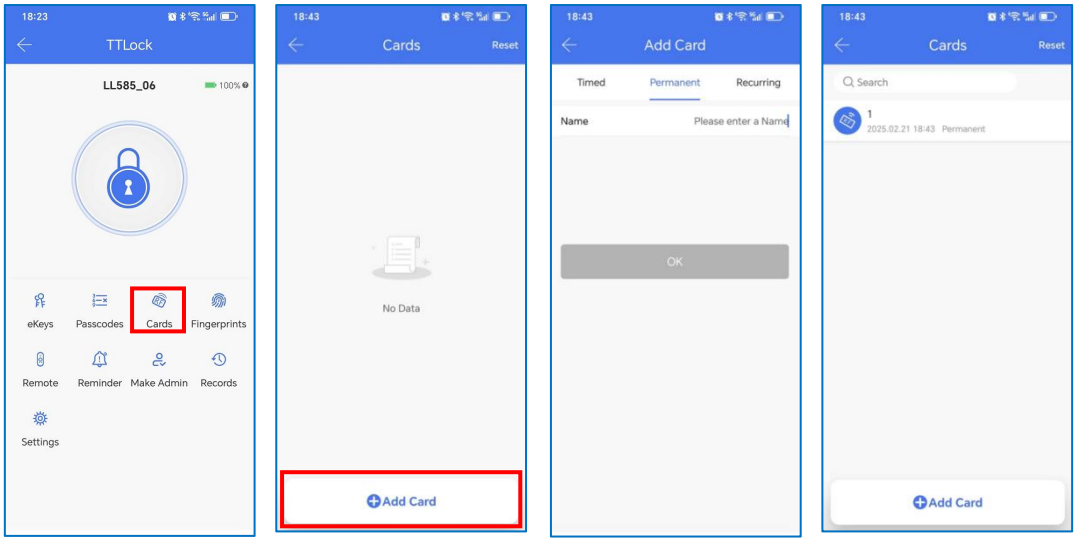

① ② ③ ④

4.8.Add fingerprint (option)

The premise that a fingerprint can be used to open a door is that it needs to be added first. The adding process needs to be performed by the APP beside the lock. The fingerprint expiration data can be set, it can be permanent, timed or recurring. After setting ,you can modify its validity period.

If someone forces you to open door, you can use this forced fingerprint.The alarm message will be sent to the administors. To use this feature, please make sure your lock is online.Please don't use the forced fingerprint for daily use.

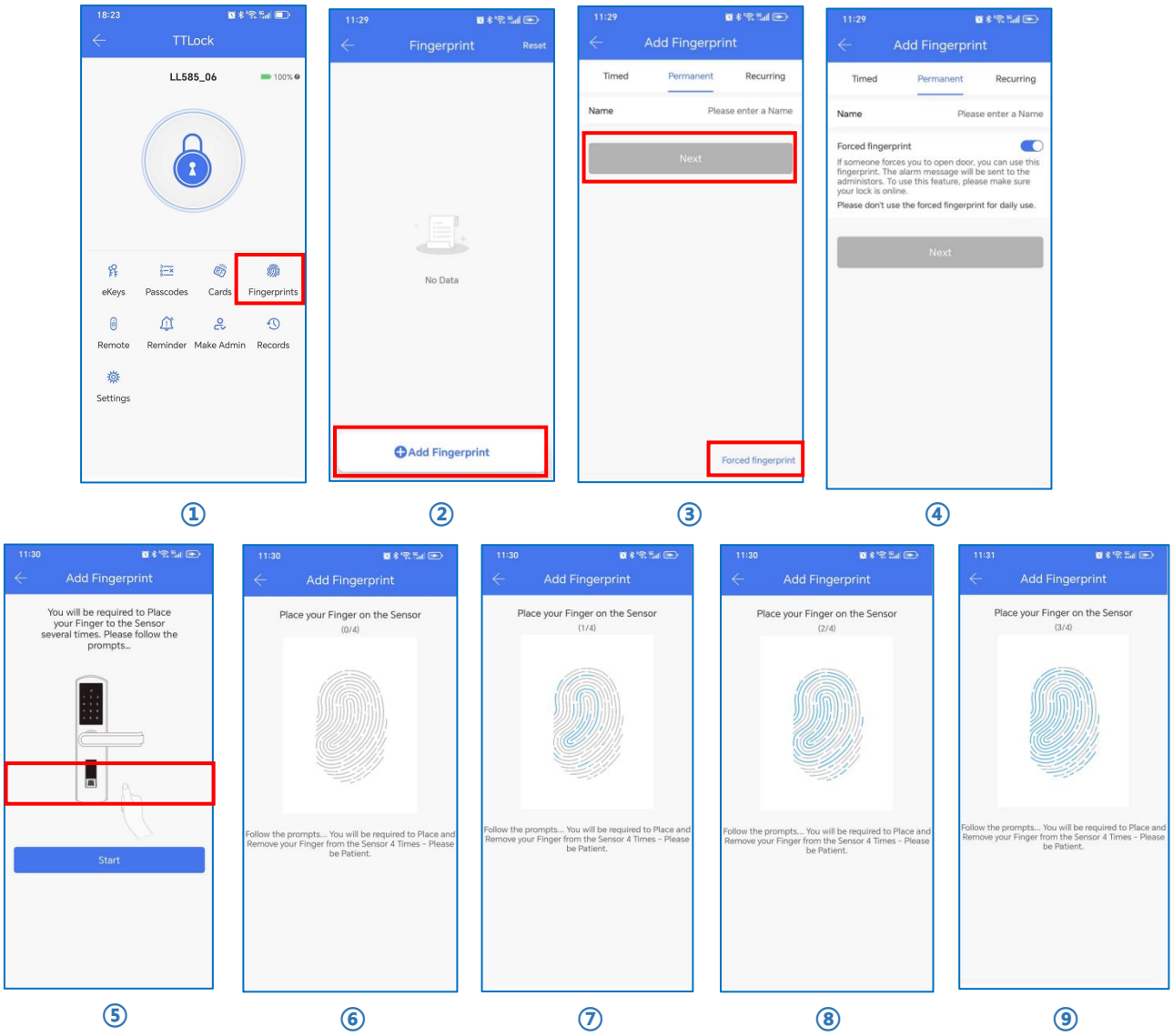

4.9.Send eKeys

Click on the “eKeys”as shown in figure, you can send the eKey to other users of TTlock to authorize the unlock(the receiver must be download the APP and set up an account)→ Select e-key format (Timed, permanent, One-time, Recurring) → Enter recipient's account of TTlock,set the name and effective time of the eKey, Can choose to allow remote unlocking or disallowing, authorized administrator or not authorized, as shown in figure →Send→The recipient's account has Bluetooth unlock permission.

The eKeys manager can delete ekey, reset ekey, send and adjust the ekey, meanwhile he can search the lock record.

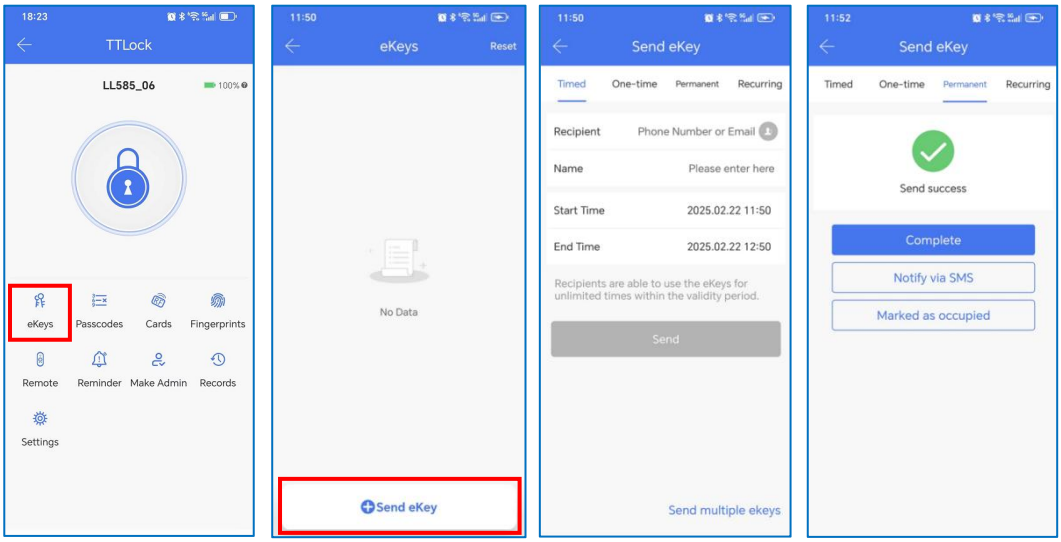

① ② ③ ④

4.10.Unlock records

Click " Records "you can query your unlock record as shown in figure. Cannot see the operation records possible reasons:

1.The lock is not connected to the internet, so the records of passcode card, fingerprint, and other door opening methods cannot be uploaded in real-time.

2.Only a certain period of records can be retained.If you need to keep the historicalrecords, you can export the them.

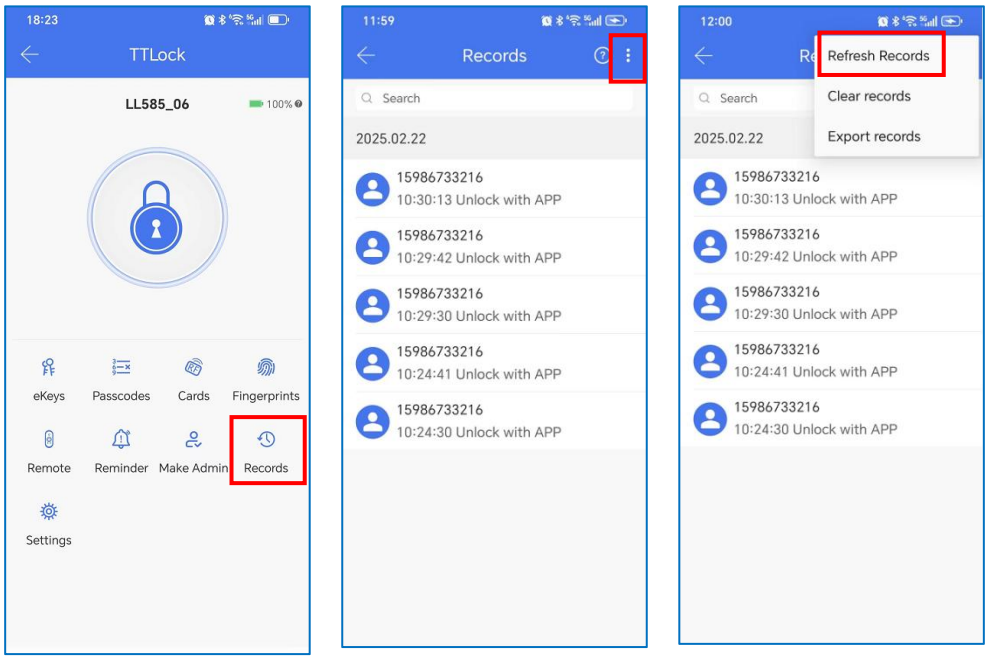

① ② ③

5. Gateway (Optional)

The TT lock is directly connected via Bluetooth, that is why it is not attacked by the network. The gateway is a bridge between smart locks and home WIFI networks. Through the gateway, the user can remotely view and calibrate the lock clock, read the unlock record. Meanwhile, it can remotely delete and modify the password.

5.1 Add Gateway

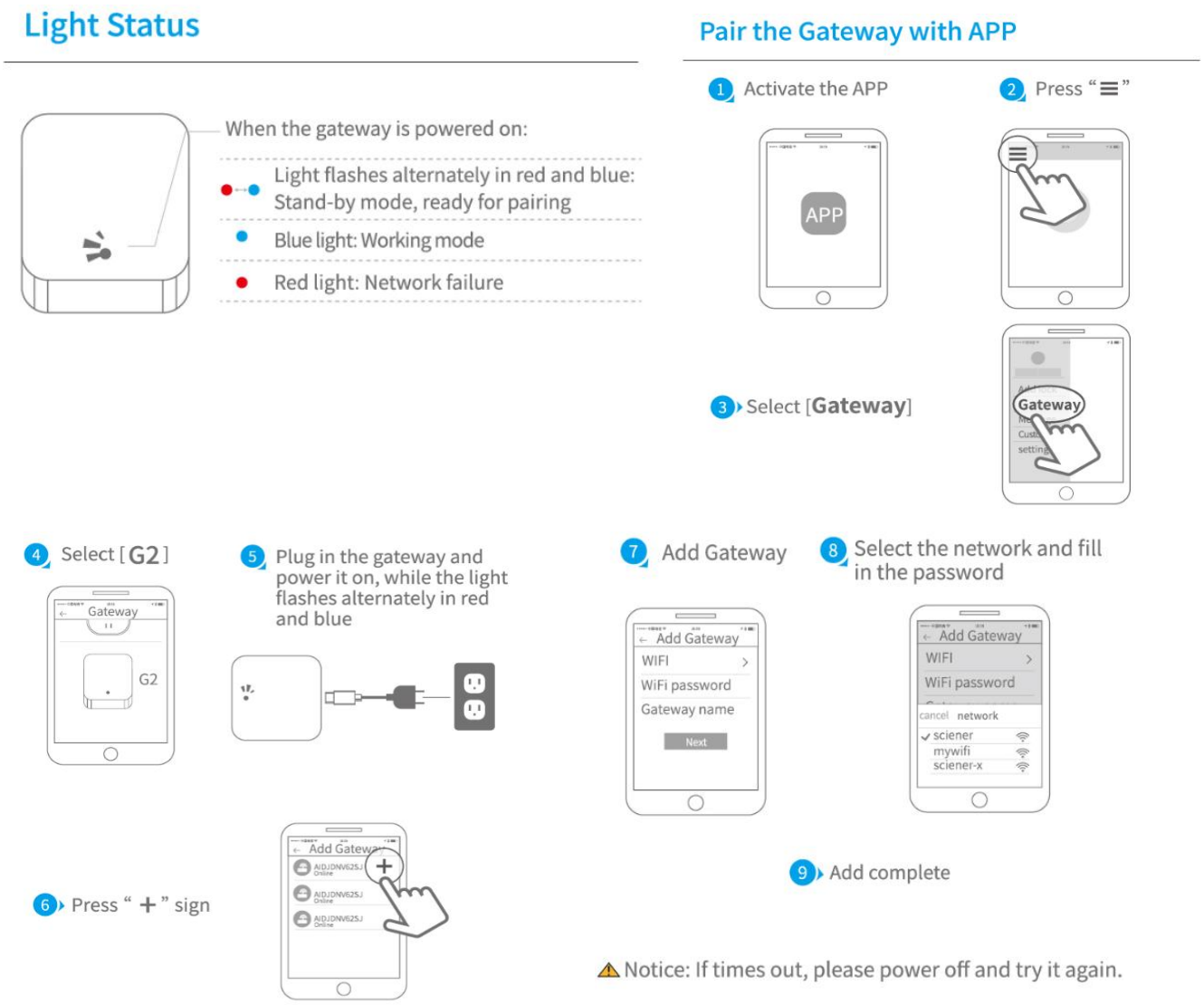

5.2 Manual

After a short period of time, you can see which locks are in their coverage in the app. Once the lock is bound to the gateway, the lock can be managed through the gateway.

6. FAQ

1.How to read operation records?	In the Records of the main interface.
2.Why can't I unlock it after open the passage mode?	You need to perform an unlock verification in any method, than the passage mode will take effect.
3.What is the purpose of Auto Lock?	You can set how long to lock after unlocking.
4.After installation, touch sensing keyboard, screen no respond	a) In this case, first check that the positive and negative electrodes of the battery have been installed upside down, whether the battery has enough power b) Remove the back panel and see if it's connected. c) To eliminate the above situation, you need to remove the lock ,check whether the wires of the lock body are squeezed, and the re-wire.
5.Unable to register fingerprint	Check the fingers for dirt or wear, check the fingerprint head on the lock for dirt and oil stains, etc. Check to see if the fingerprint is working properly(Press to see if there is any responds.
6.What is the reason why the smart lock consumes fast power?	a) Large standby power consumption. b) Short circuit.
7.There is no response to pressing the handle on outside the door, and there is unlock normally on inside the door, but the verification is normal, and the motor is normal.	It may be the triangle direction on the clutch was error, please check correction.
8.How many times will the password be locked? How long is it locked?	Enter the wrong password more than 5 times in a row, the keyboard is locked for 90 seconds.

Guarantee

Customer Name：_____

Customer Calls ：_____

Purchase Date ：_____

Product Name ：_____

Product Model ：_____

Note:

1) Please keep this card so that you can use it when you need warranty service.

2) We provide you with a one-year warranty from the date of purchase.

3) This warranty service is valid for customers in any country in the world.

FCC WARNING

This device complies with part 15 of the FCC Rules. Operation is subject to the following two conditions: (1) this device may not cause harmful interference, and (2) this device must accept any interference received, including interference that may cause undesired operation.

Any changes or modifications not expressly approved by the party responsible for compliance could void the user's authority to operate the equipment.

NOTE: This equipment has been tested and found to comply with the limits for a Class B digital device, pursuant to Part 15 of the FCC Rules. These limits are designed to provide reasonable protection against harmful interference in a residential installation. This equipment generates, uses and can radiate radio frequency energy and, if not installed and used in accordance with the instructions, may cause harmful interference to radio communications.

However, there is no guarantee that interference will not occur in a particular installation. If this equipment does cause harmful interference to radio or television reception,

which can be determined by turning the equipment off and on, the user is encouraged to try to correct the interference by one or more of the following measures:

-- Reorient or relocate the receiving antenna.

-- Increase the separation between the equipment and receiver.

-- Connect the equipment into an outlet on a circuit different from that to which the receiver is connected.

-- Consult the dealer or an experienced radio/TV technician for help.

To maintain compliance with FCC’ s RF Exposure guidelines, This equipment should be installed and operated with minimum 20cm distance between the radiator and your body: Use only the supplied antenna.