Smart Door Lock

User Manual

S3

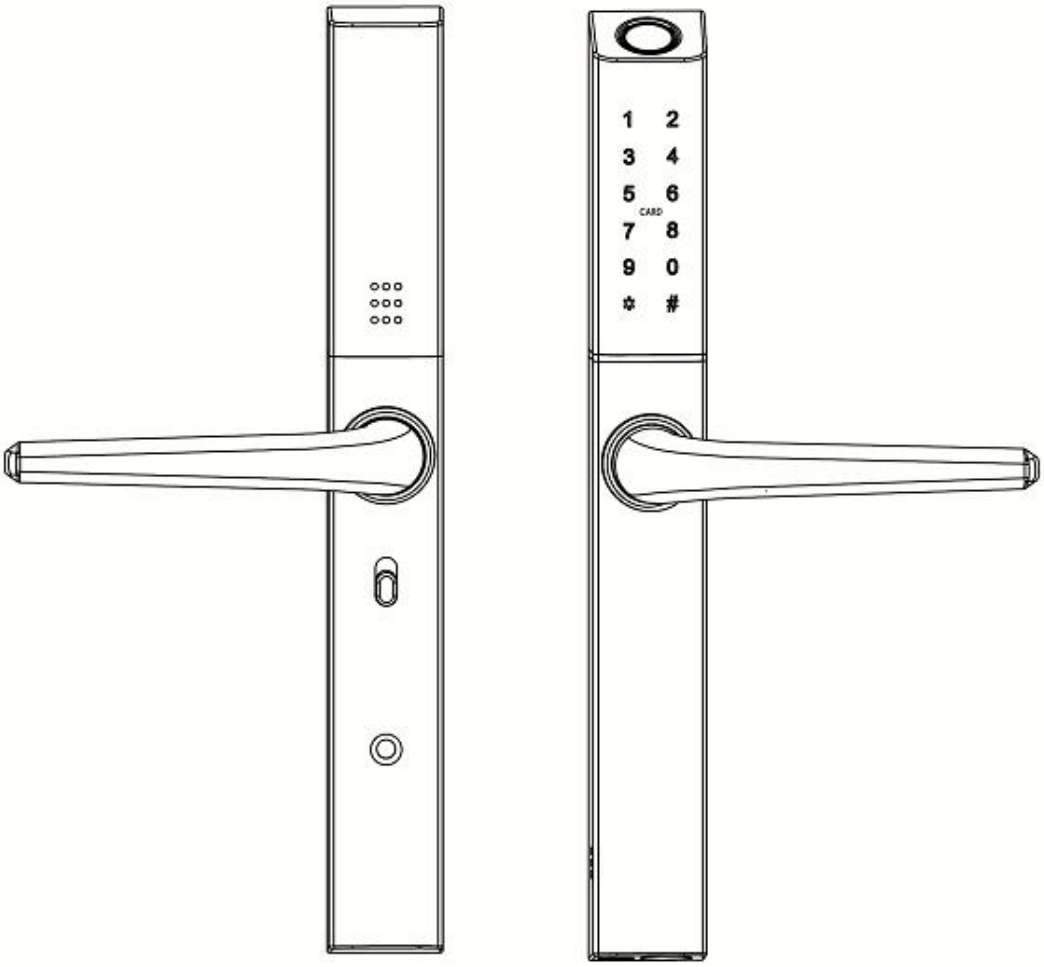

Special Attention:

1. *Mechanical keys please keep outdoor, just in case keys lock in doors.*

2. *Please replace for the battery when low wattage alarm.*

3.*Reading this manual carefully before installation, and keep it for future reference.*

1. Introduction

1.1.Lock structure

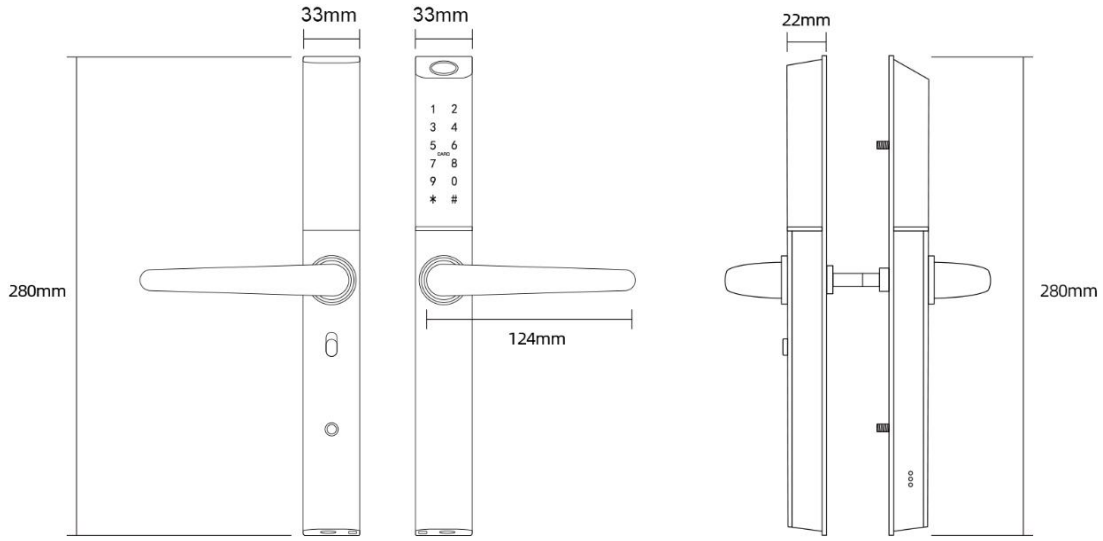

1.2.Packing List

Check the following drawing to check whether the package contains all the parts

NO	Name	Qty		NO	Name	Qty
1	Front Pane	1		12	Sliding Screws:M5*11mm	1
2	Back Panel	1		13	Mortise Screws:M5*10mm (For Aluminum Door)	4
3	Mortise	1		14	Mortise Screws:M4*25mm (For Wooden Door)	4
4	Card	3		15	M5*25mm Screw	1
5	Mechanical Key	2		16	M5*30mm Screw	1
6	Spring	1		17	M5*40mm Screw	1
7	Hexagonal wrench	1		18	M5*50mm Screw	1
8	User Manual	1		19	M5*60mm Screw	1
9	Strike&Strike Box	1+1		20	50mm Square shaft	1
10	Screw Stubs:M5*30mm	2		21	57mm Square shaft	1
11	Screw Stubs:M5*35mm	2		22	67mm Square shaft	1

1.3.Specifications

Suitable for Models	S3	Doors Applicable	Aluminum door Wooden door
Materials	Handle：ADC12 Panel：Aluminum alloy	Working Voltage	6V/4x AA Batteries
Lock Weight	2.5KG	Door Thickness to Fit	35-60mm
Unlocking Way	Bluetooth Password Card Mechanical key Gateway(option)	Data Capacity	Fingerprint：200 Password：150 Card：200
Color	Silver Black	Working Temperature	-10℃-55℃
Low Wattage Alarm	Less than 4.8V	Working Humidity	0-95%

System Initialization

Open the cover plate of the front panel ,long press the "Reset" button on the back panel for 5s, press “000#”,and the initialization is complete

Reset button

2.Installation

2.1.Adjust the Handles Direction

Notice: *Adjust the handle according to the direction you open the door. The door opens to the left, with the handle facing left. The door opens to the right, with the handle facing right.*

For Exterior Assembly:

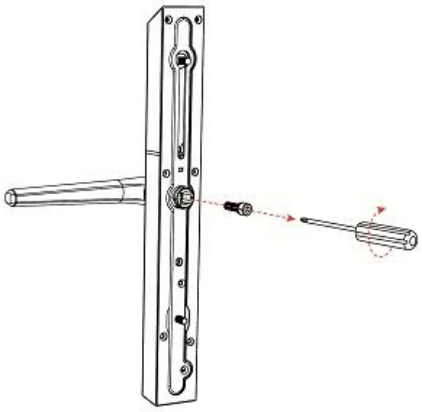

1.Loosen the screw

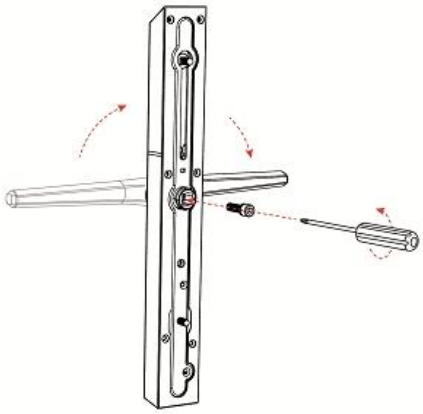

2.Adjust the direction of the handle，tighten the screws

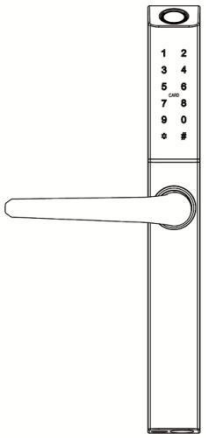

3.Completion

For Interior Assembly:

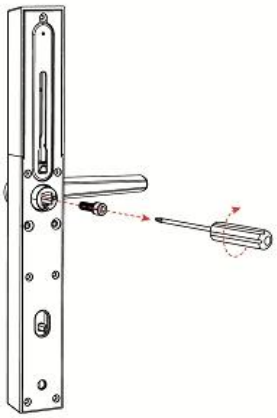

1.Loosen the screw

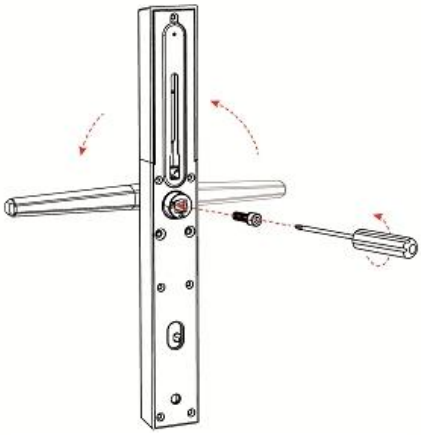

2.Adjust the direction of the handle, tighten the screws

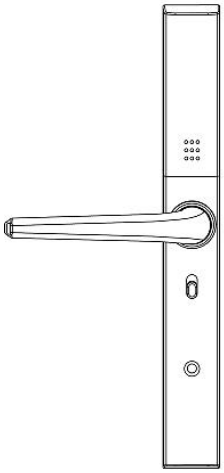

3.Completion

2.2.Installation Diagram(For 3585)

Step 1 Install Mortise

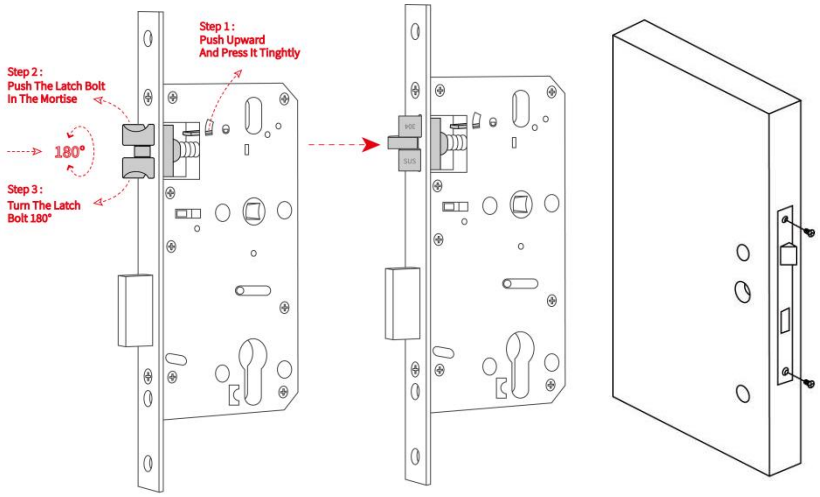

1.According to the size indicated by the hole icon, open the corresponding hole position as needed, and install the lock body.

2.Adjust the direction of the bolt according to the door opening direction

Step 2 Install Sliding Screw Casing and Square Shaft

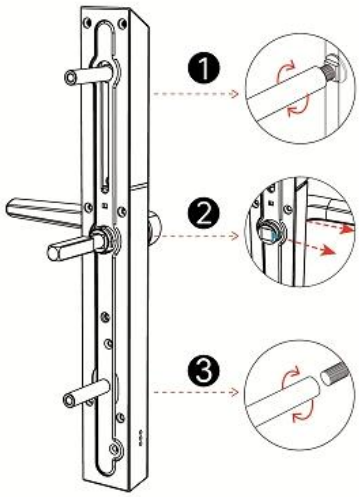

1.Choose a screw column suitable for the thickness of the door install it on the front panel,

2.Install the square shaft, put on the U-Clip,Arrow aligned with door handle orientation.

Step 3 Install Front Panel

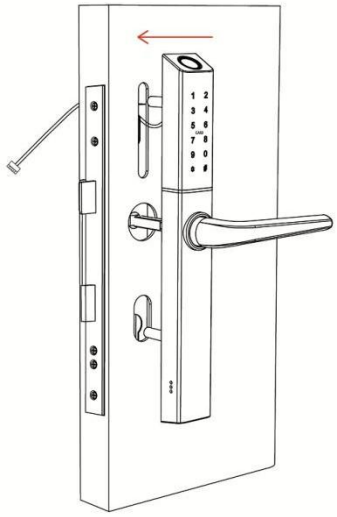

1.Align the front panel of the installed accessories with the holes of the door and install

Step 4 Connect Front and Back Panels Wires

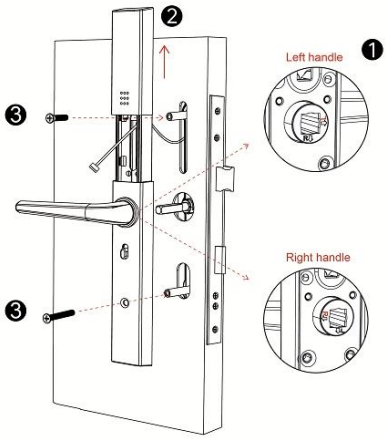

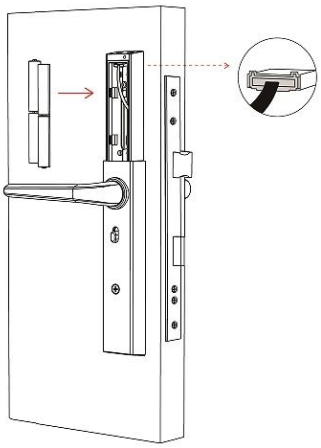

1.Fix the front and back panels with screws suitable for the thickness of the door
2.The Arrow aligned of the rear panel faces in the left and right directions of the handle
3.The Arrow aligned of the rear panel faces in the left and right directions of the handle

Step 6 Install the Battery

1.Install 4* AA batteries
2.Install the battery cover

3.Operation

3.1.Registration

The software (iOS version) can be downloaded from the app store, and the Android version can be downloaded from the application store of Google play, Yingyongbao, Baidu, Ali, 360, Huawei, and Xiaomi.

3.2. Connect lock to the phone

1) please scan the QR code to download the app

2) You can also search for TTLock in the APP store(Google Play)to download

4) Register a new account (phone number or email) or login with an existing account.

5) Touch the lock screen to light, click "+ Add Lock"

6) The lock nearby will appear on the phone screen, Click "+"

7) Re-name the lock

8) The lock added successfully

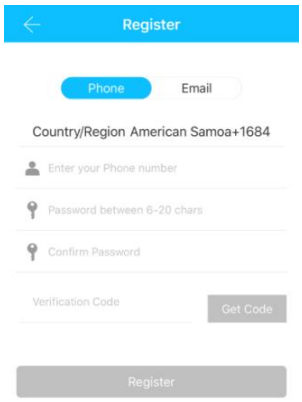

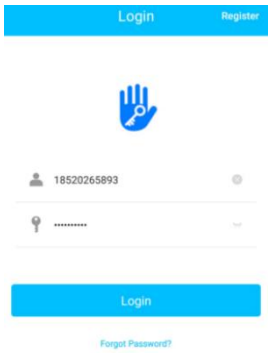

TTlock users can register the account by mobile phone and Email which currently support 200 countries and regions on the world. The verification code will be sent to user's mobile phone or email, and the registration will be successful after the verification.

3.3.Add locks

TTLock supports multiple types of lock devices. The lock needs to be added by the app after entering the add mode. Generally, a lock that has not been added, as long as the lock keyboard is touched, it will enter the add mode. The default password is 123456 if not added by the phone

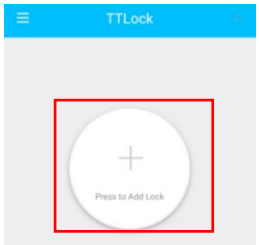

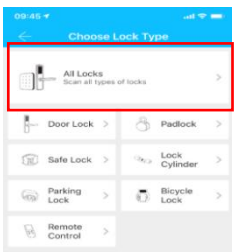

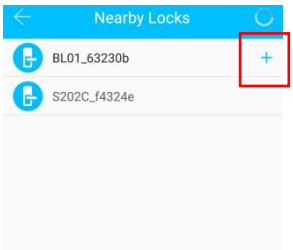

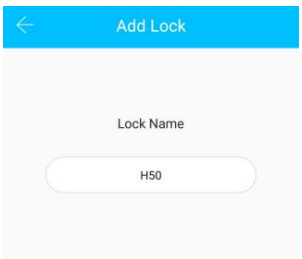

3.4.User Management

3.4.1. Bluetooth management

Make sure there is no problem with Bluetooth communication. After connecting the phone to the door lock as above, Click " "to unlock.(the phone is within 5meters from the door lock)

3.4.2. Setting Passcode

Passcodes are also a way to unlock. After entering the passcode on the locked keyboard, press the unlock button in the lower right corner to unlock. Passcodes are divided into permanent, time-limited, single, clear, cycle, and custom.(You can share the Passcode to other user via WeChat、SMS、Email、Messenger、WhatsApp)

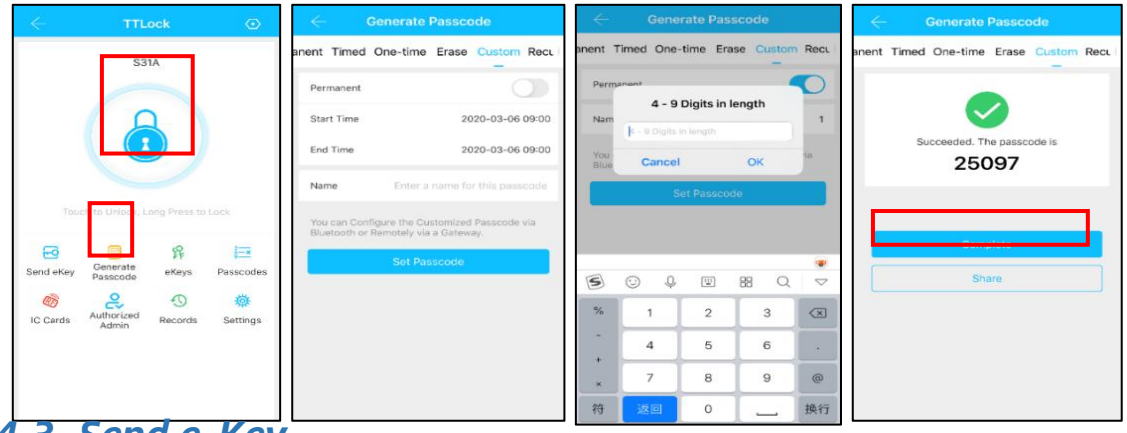

3.4.3. Send e-Key

Click on the " Send eKey " as shown in figure, you can send the eKey to other users of TTlock to authorize the unlock(the receiver must be download the APP and set up an account)→ Select e-key format (Timed, permanent, One-time, Recurring) → Enter recipient's account of TTlock,set the name and effective time of the eKey, Can choose to allow remote unlocking or disallowing, authorized administrator or not authorized, as shown in figure →Send→The recipient's account has Bluetooth unlock permission.

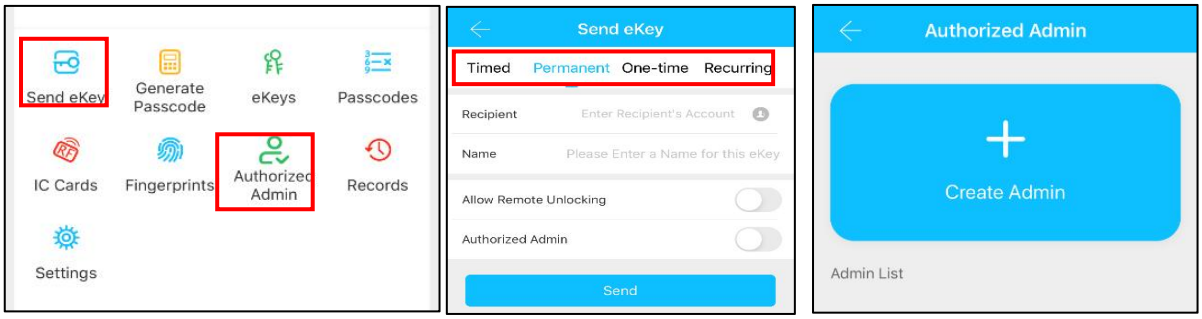

3.4.4.Add card

Supports opening doors through various IC cards. Before an IC card is used to open the door, it needs to be added first. The adding process needs to be performed by the app beside the lock.The validity period of the IC can be set, it can be permanent, or it can be limited in time.

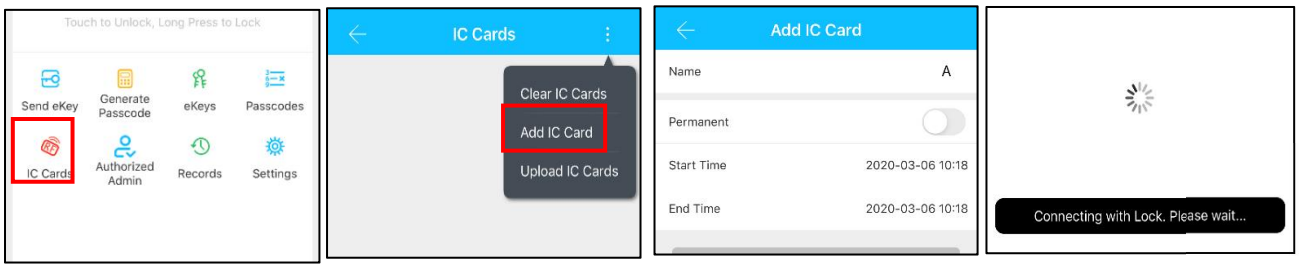

3.4.5. e-Key management

Click " eKeys " The manager can delete ekey, reset ekey, send and adjust the ekey, meanwhile he can search the lock record.

3.4.6. Passcode management

Click " Passcodes All generated passwords can be viewed and managed in the password management module. This includes a password change, password deletion, password reset, and password unlock record.

3.4.7.Unlock records

Click " Records "you can query your unlock record as shown in figure

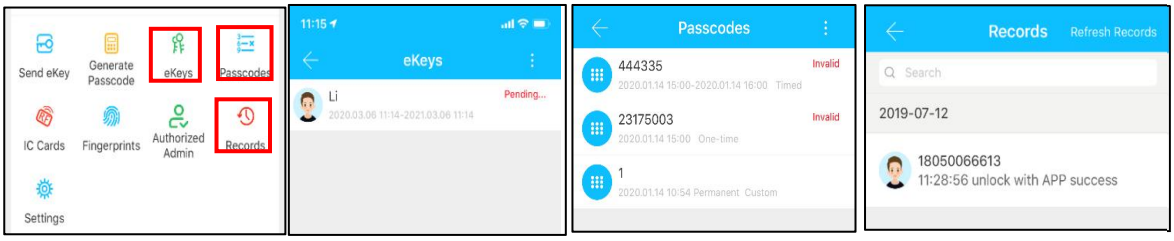

3.5. Gateway management(Optional)

The TT lock is directly connected via Bluetooth, that is why it is not attacked by the network. The gateway is a bridge between smart locks and home WIFI networks. Through the gateway, the user can remotely view and calibrate the lock clock, read the unlock record. Meanwhile, it can remotely delete and modify the password.

3.5.1. Add Gateway

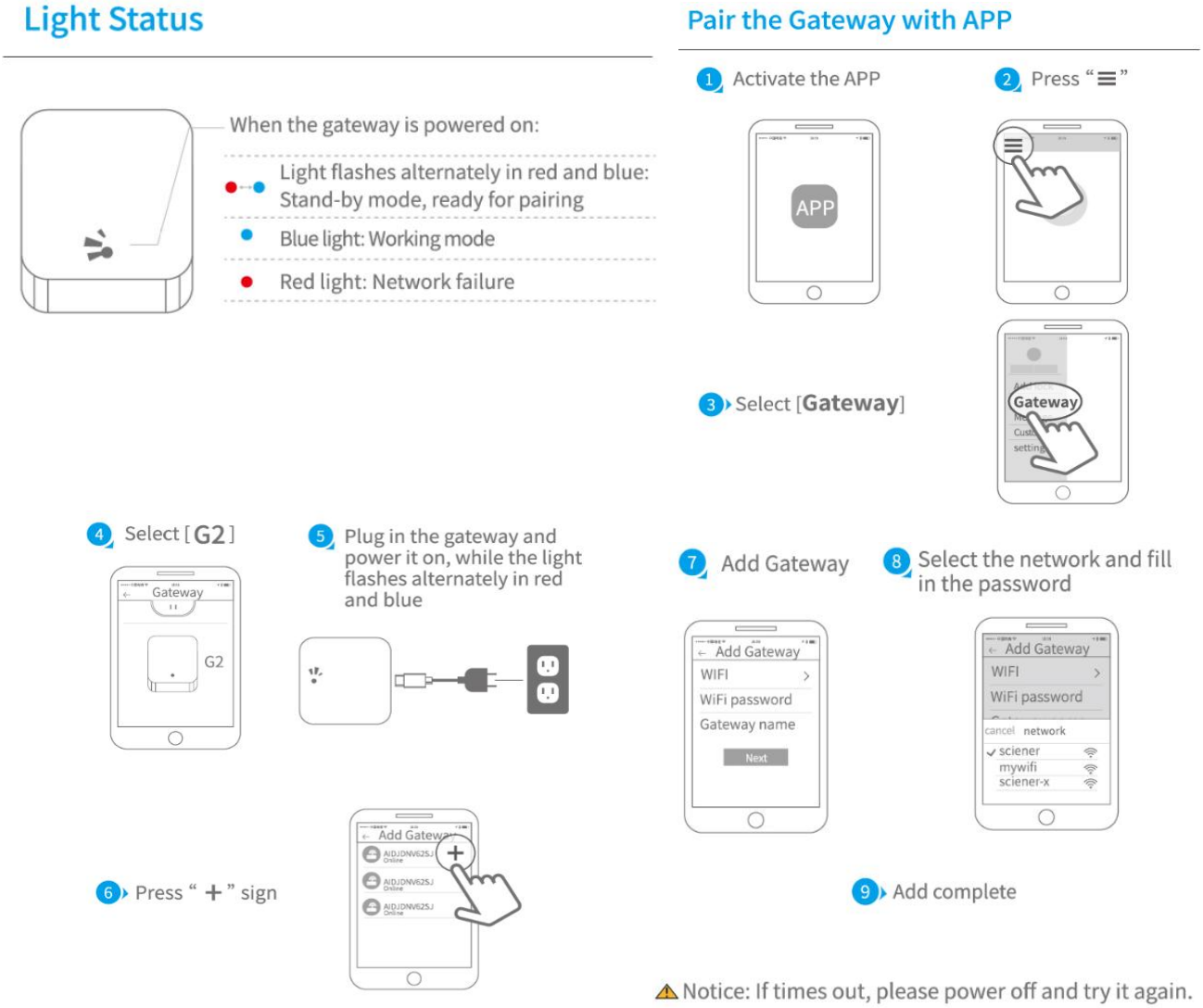

3.5.2. Manual

After a short period of time, you can see which locks are in their coverage in the app. Once the lock is bound to the gateway, the lock can be managed through the gateway

4.FAQ

1) How to read operation records?	In the Records of the main interface. .
2) Why can't I unlock it after open the passage mode	You need to perform an unlock verification in any method, than the passage mode will take effect.
3) What is the purpose of Auto Lock	You can set how long to lock after unlocking
4）After installation, touch sensing keyboard, screen no respond	a) In this case, first check that the positive and negative electrodes of the battery have been installed upside down, whether the battery has enough power b) Remove the back panel and see if it's connected. c) To eliminate the above situation, you need to remove the lock ,check whether the wires of the lock body are squeezed, and the re-wire.
5）Unable to register fingerprint	Check the fingers for dirt or wear, check the fingerprint head on the lock for dirt and oil stains, etc. Check to see if the fingerprint is working properly(Press to see if there is any responds.
6）What is the reason why the smart lock consumes fast power?	a) Large standby power consumption b) Short circuit
7）There is no response to pressing the handle on outside the door, and there is unlock normally on inside the door, but the verification is normal, and the motor is normal.	It may be the triangle direction on the clutch was error, please check correction.
8）How many times will the password be locked? How long is it locked?	Enter the wrong password more than 5 times in a row, the keyboard is locked for 5 minus, Other ways to can open the door

Guarantee

Customer Name：_____

Customer Calls ：_____

Purchase Date ：_____

Product Name ：_____

Product Model ：_____

Note:

① *Please keep this card so that you can use it when you need warranty service.*

② *We provide you with a one-year warranty from the date of purchase.*

③ *This warranty service is valid for customers in any country in the world.*

FCC WARNING

This device complies with part 15 of the FCC Rules. Operation is subject to the following two conditions: (1) this device may not cause harmful interference, and (2) this device must accept any interference received, including interference that may cause undesired operation.

Any changes or modifications not expressly approved by the party responsible for compliance could void the user's authority to operate the equipment.

NOTE: This equipment has been tested and found to comply with the limits for a Class B digital device, pursuant to Part 15 of the FCC Rules. These limits are designed to provide reasonable protection against harmful interference in a residential installation. This equipment generates, uses and can radiate radio frequency energy and, if not installed and used in accordance with the instructions, may cause harmful interference to radio communications.

However, there is no guarantee that interference will not occur in a particular installation. If this equipment does cause harmful interference to radio or television reception,

which can be determined by turning the equipment off and on, the user is encouraged to try to correct the interference by one or more of the following measures:

-- Reorient or relocate the receiving antenna.

-- Increase the separation between the equipment and receiver.

-- Connect the equipment into an outlet on a circuit different from that to which the receiver is connected.

-- Consult the dealer or an experienced radio/TV technician for help.

To maintain compliance with FCC's RF Exposure guidelines, This equipment should be installed and operated with minimum 20cm distance between the radiator and your body: Use only the supplied antenna.