Smart Lock

User Manual

H01A-TYAZ

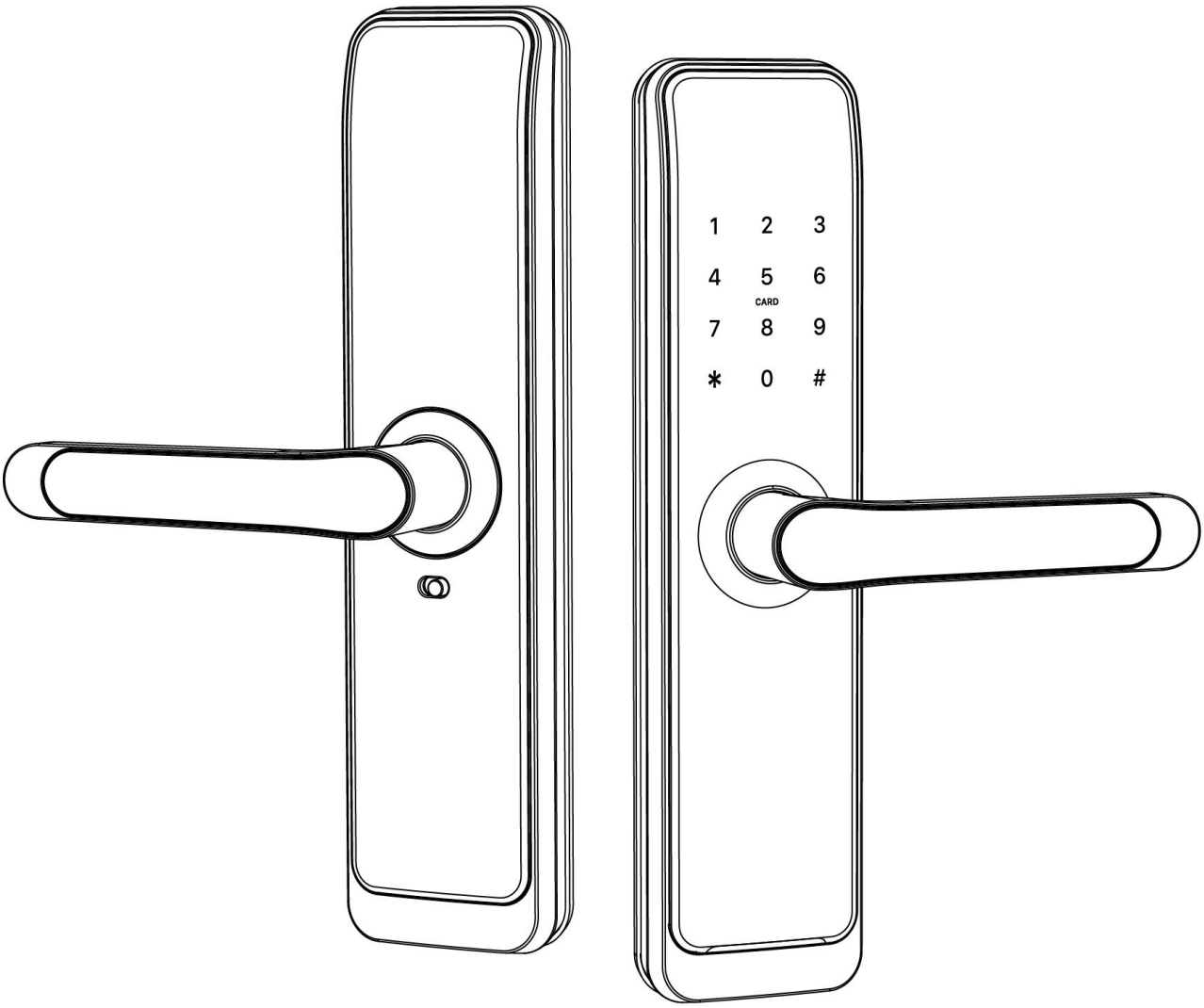

Special Attention:

1.Please keep any mechanical keys outdoors. in case of any emergencies requiring their use.

2.Please promptly replace batteries after receiving low battery notification.

3**.Please carefully read this manual before installation, and keep it for future reference.**

1. Introduction

1.1.Lock structure

1.2.Packing List

Check the following drawing to check whether the package contains all the parts

NO	Name	Qty	NO.	Name	Qty
1	Front Panel	1	10	Mortise Screws:M5*10mm (For Aluminum Door)	4
2	Back Panel	1	11	Mortise Screws:M4*25mm (For Wooden Door)	4
3	Mortise	1	12	60mm Square shaft	1
4	Card	3	13	80mm Square shaft	1
5	Mechanical Key	2	14	M5*25mm Screw	1
6	Waterproof Rubber Plate	2	15	M5*40mm Screw	1
7	Screw Stubs:M5*35mm	2	16	M5*50mm Screw	1
8	Strike&Strike Box	1+1	17	U-Clip	1
9	Sliding Screws:M5*10mm	1	18	User Manual	1

1.3.Specifications

Suitable for Models	H01A-TYAZ	Doors Applicable	Aluminum door Wooden door
Materials	Aluminum alloy	Working Voltage	6V/4x AA Batteries
Lock Weight	3KG	Door Thickness to Fit	35-65mm
Unlocking Way	Password Card Mechanical key	Data Capacity	Password：10 temporary password：10 Card：380
Color	Silver Black	Working Temperature	-10℃-55℃
Low Wattage Alarm	Less than 4.8V	Working Humidity	0-95%

1.4.Networking mode：

1.Touch to wake the screen

2.Long press the network configuration key for 5 seconds to enter the network configuration mode

2.Installation

2.1Turn the handle

Notice: Adjust the handle according to the direction you open the door.

For Front Panel

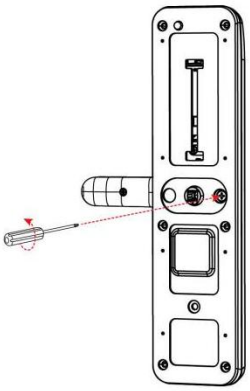

1.Loose Screws

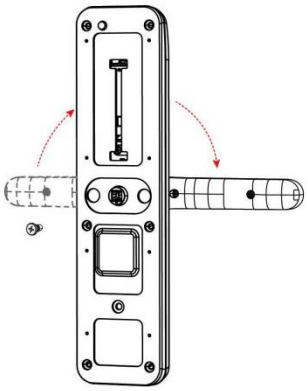

2.Left Open the Handle Toword the Left;
Right Open the Handle Toword the Right.

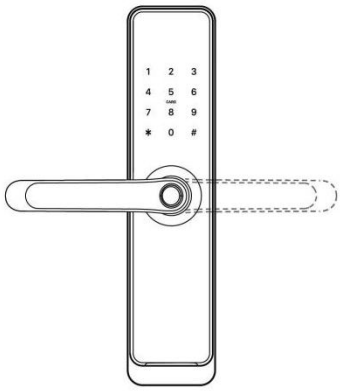

3.Reinstall the Screw After Adjusting the Direection

For Back Panel

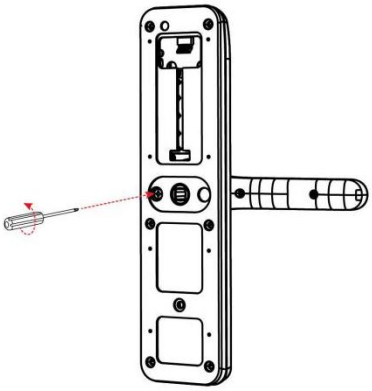

1.Loose Screws

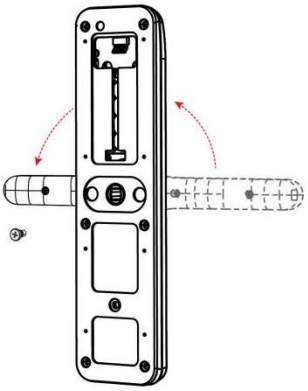

2.The direction of the rear panel handle is opposite to the front panel handle

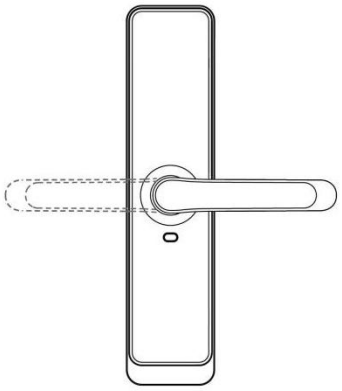

3.Reinstall the Screw After Adjusting the Direection

2.2. Installation Diagram(For 5572)

Step 1 Install Mortise	Step 2 Install Sliding Screw Casing
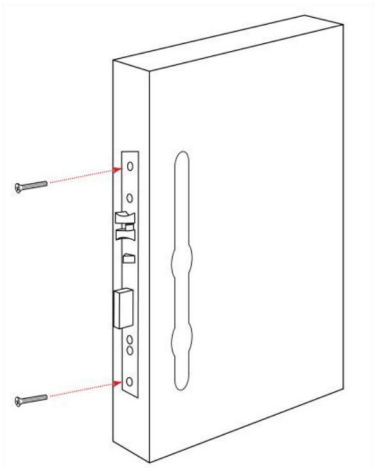	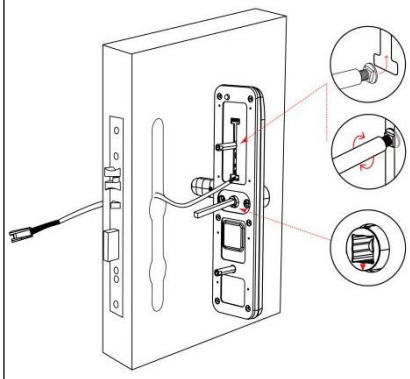 1.The screw casing place is adjustable from 55mm to 100mm far from the square shaft. Depending on the location of the hole-drilling or the old door hole. 2.The arrow is always pointing down
Step 3 Install Back Panel and link wire	**Step 4 Install fixing screws**
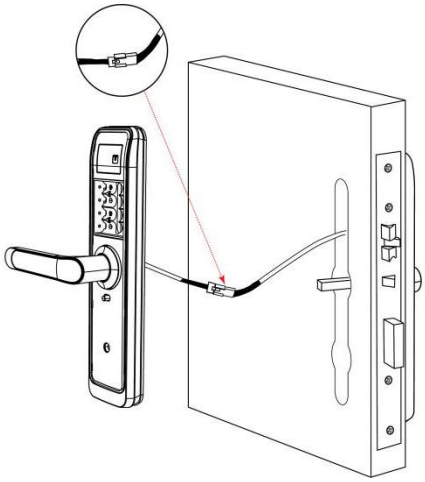	
Step 5 installation complete	
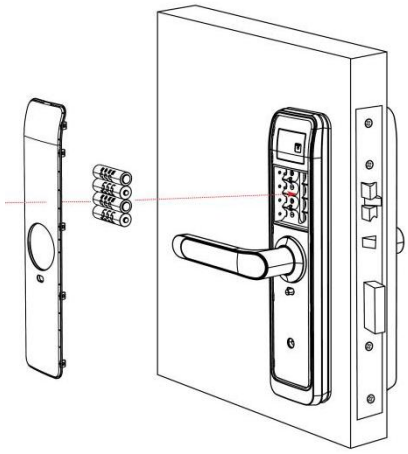	

3.Operation

3.1. Download

The software (iOS version) can be downloaded from the app store, and the Android version can be downloaded from the application store of Google play or scan the QR code above to download

3.2. Registration

After entering the APP, click "Register" at the bottom to create an account. After the authentication of the account and the setting of the password, the account is registered, and then you can log in to the system.(You can register with your email or mobile number)

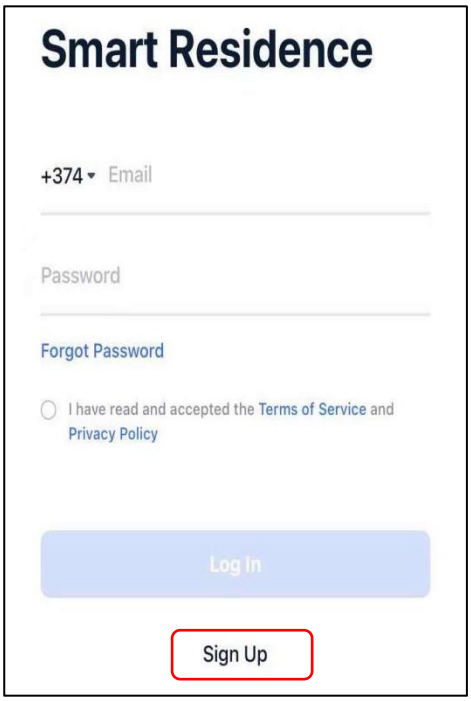

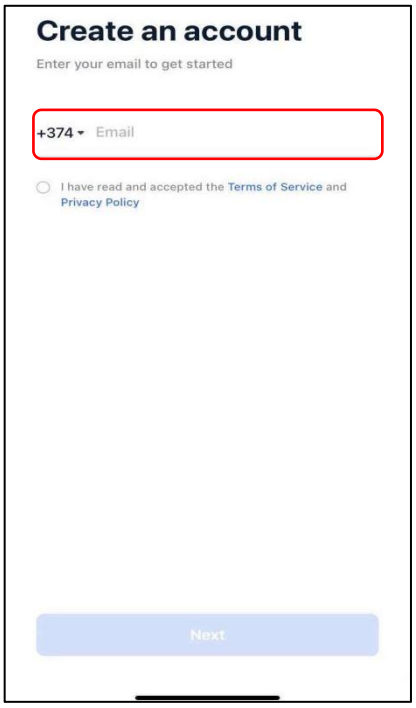

3.3.Account login

After the account is successfully registered, you can enter your account to log in

3.4.Create sites and zones

After registering an account for the first time, you need to create a site first, and you can also create an area, so that you have a site with many areas, which is convenient for classification and management of devices later.

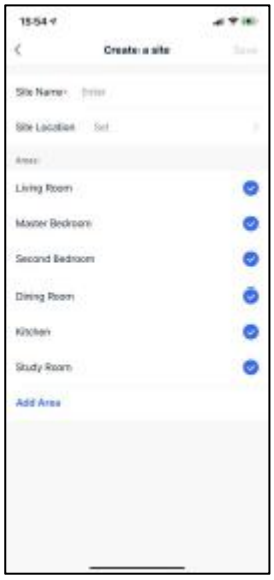

3.5.Join the site

In addition to creating your own site, you can also join other people's sites. After creating the site with other accounts, you can invite site members to join. After the invitation is confirmed, the site and smart devices can be shared

3.6.Device

3.6.1. Add Device

Select the corresponding equipment category for distribution network installation, which can be manually selected or automatically scanned. After the device is added, you can access the panel to use the corresponding functions. It can also be displayed and operated in workbench widgets.

3.6.1.1. Add Gateway

1. Tap Add Device on the Home page or + in the upper right corner of the page to go to the Add Device page.

2.Click the Gateway，Choose add your zigbee gateway type，Added successfully

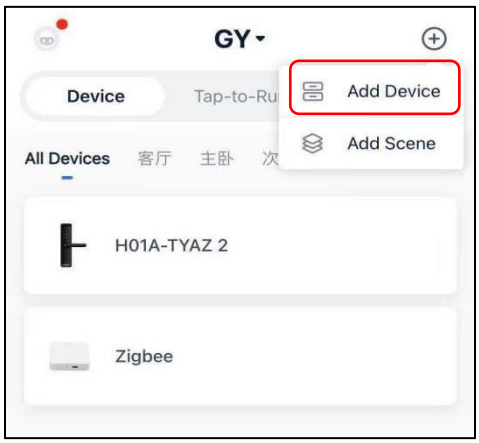

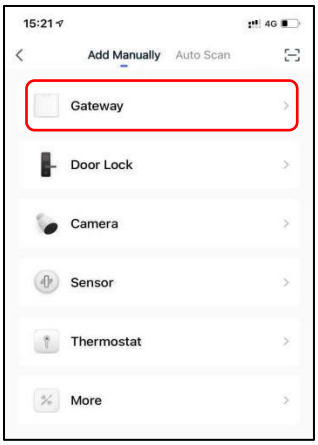

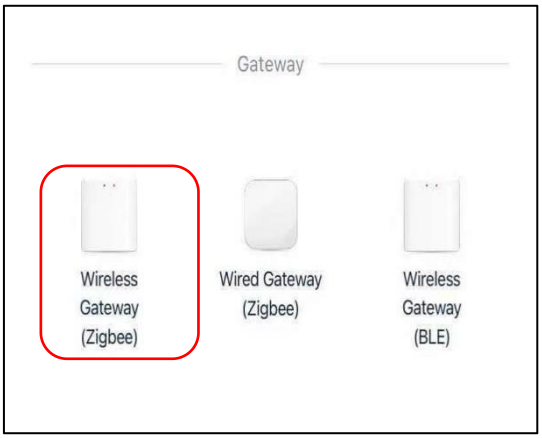

3.6.1.2. Add lock

1.After the gateway is added successfully, enter the gateway page, click on "Add sub device",then select more device type.find the door lock option

2.Door Lock：Touch to wake the screen，Long press the network configuration key for 5 seconds, Door lock reminder : “ Under connecting, pls wait” to enter the network configuration mode

3.Door lock reminder：“Network join Succeed” Added successfully

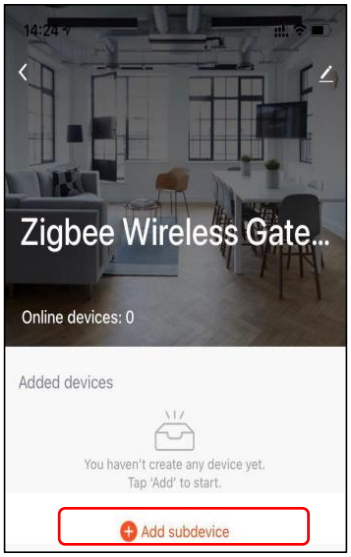

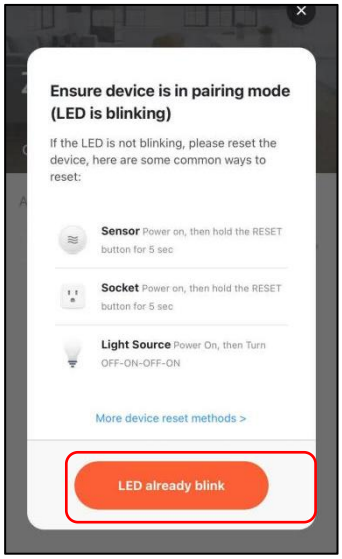

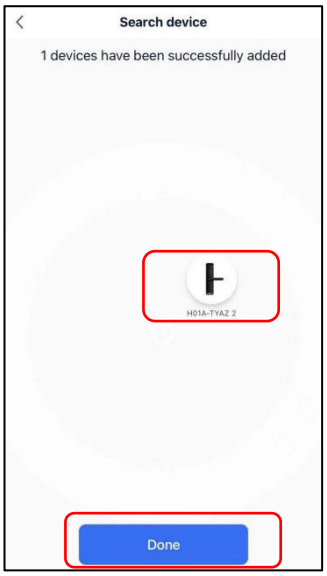

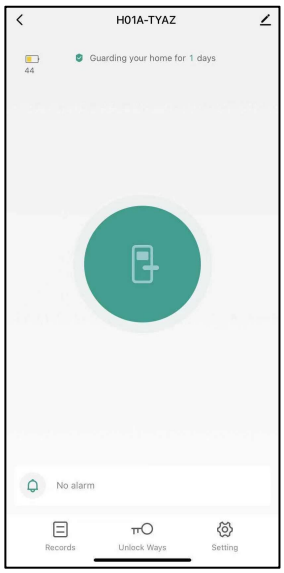

3.7.Setting

3.7.1.Remote Open

Need to open the remote unlock setting in the settings,You can directly press and hold the unlock button to unlock

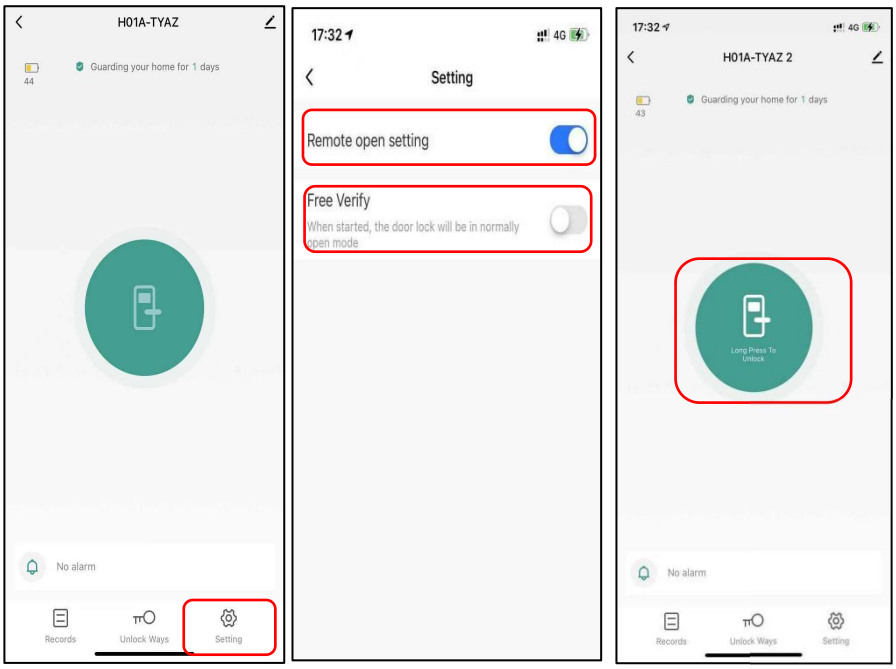

3.7.1.2.Free Verify

When started,the door lock will be in normally open mode

3.8.UnLock Ways

3.8.1.Manage Password

Used for security verification on the door lock device side and cannot be unlocked

3.8.2.Emergency Password

If all other passwords have been forgotten,use this password to unlock the lock in an emergency

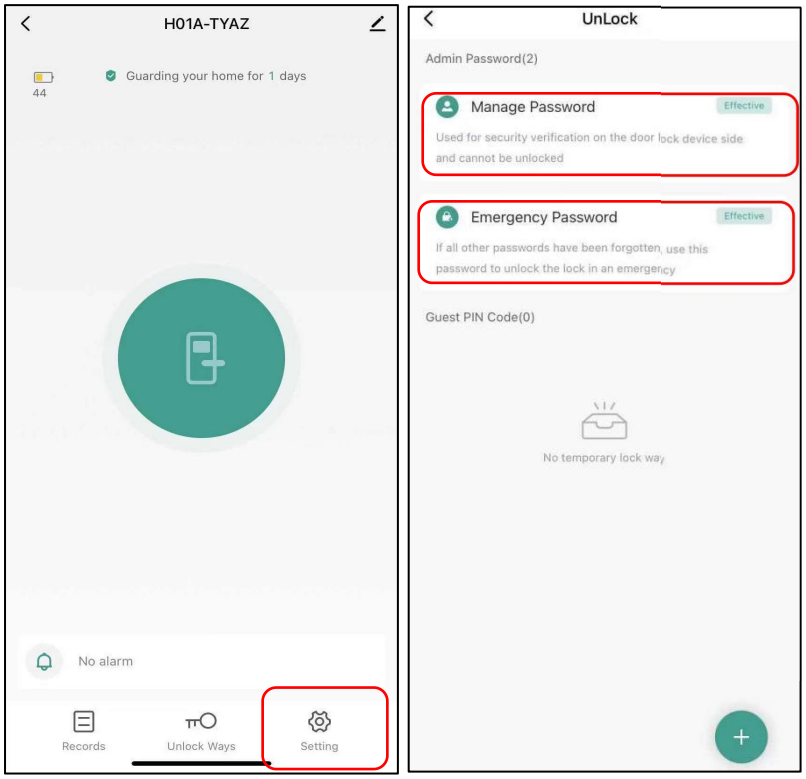

3.8.3 Add temporary password

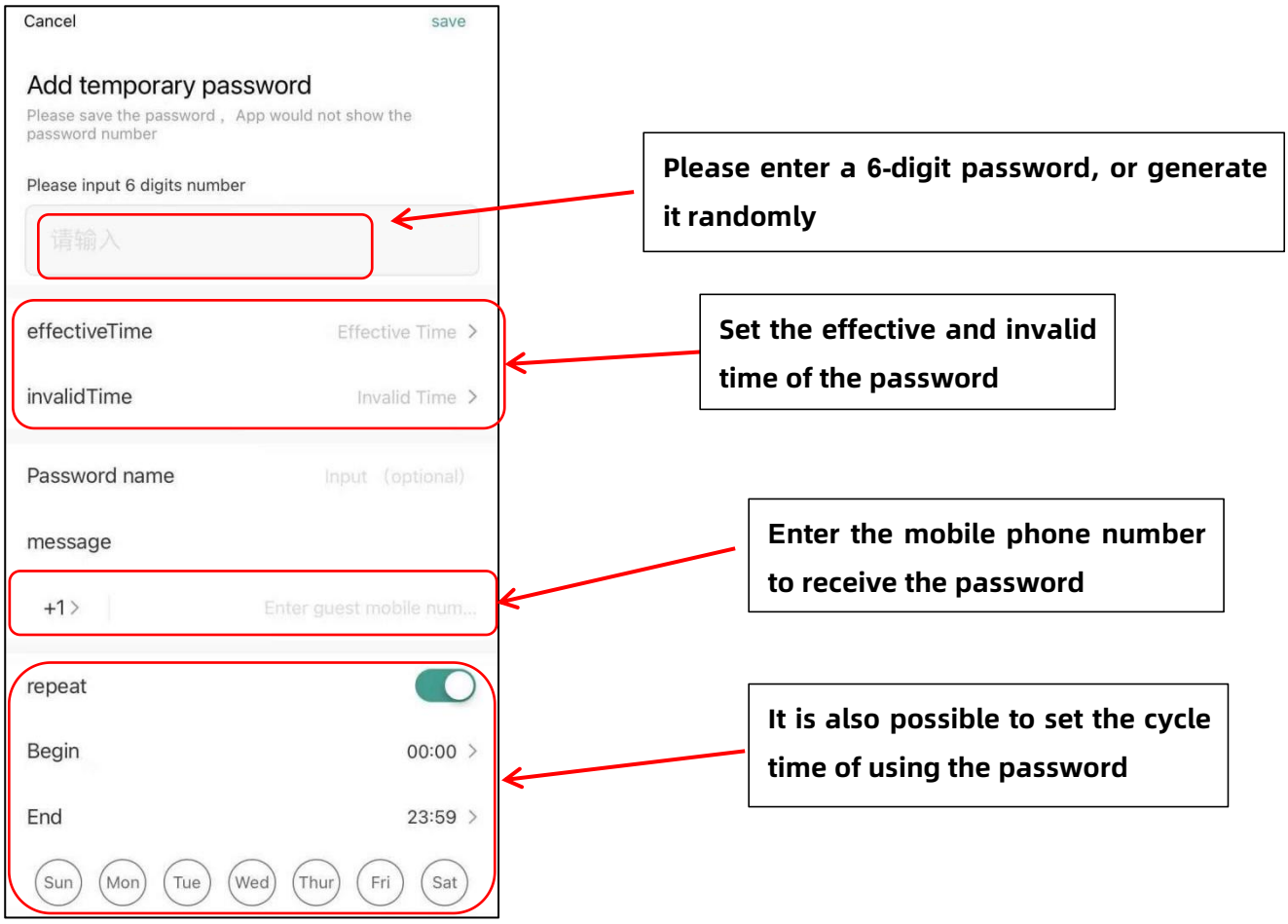

3.9.Dashboard

3.9.1.Edit widget

After entering the APP, you directly come to the workbench, where you can add and assemble the small components you need to build a custom application scenario. But before the widgets can play a role, you need to add the corresponding type of equipment. After the widget is successfully added, the specific devices and functions of the widget can be displayed in the workbench.

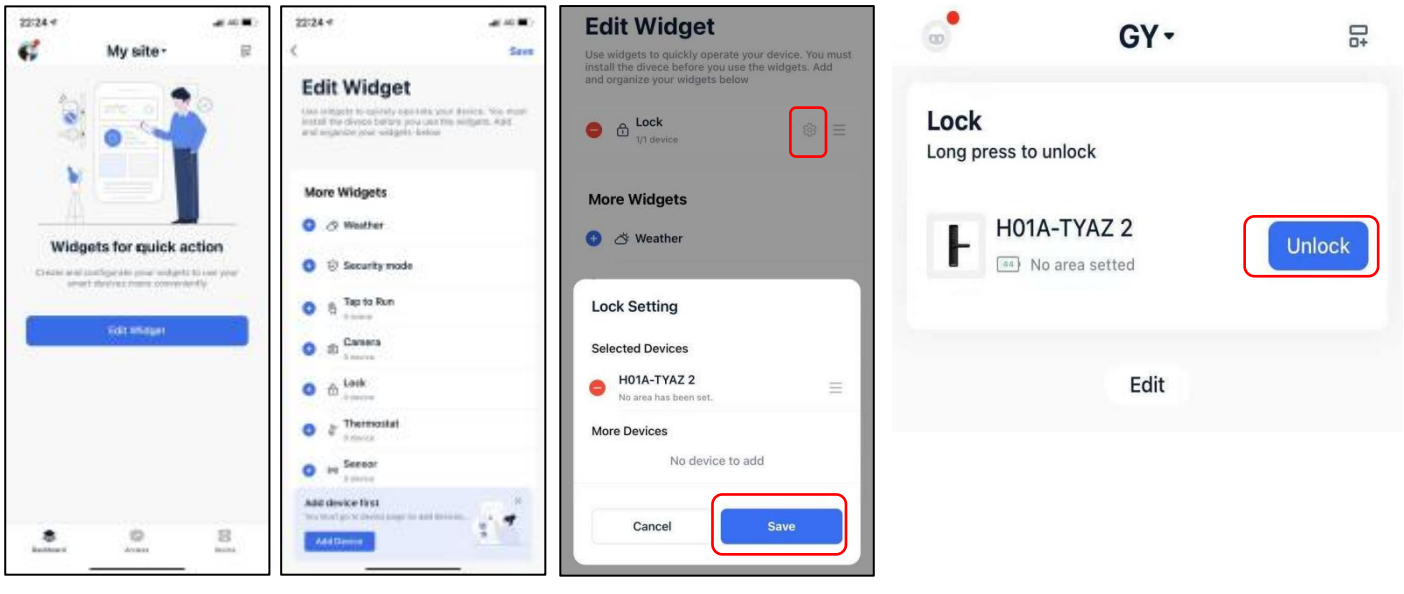

3.9.2.Access

3.9.2.1.APP access (passenger)

Add passers to this module, select the corresponding time range and pass equipment, and you can log in to the app to use the pass function.

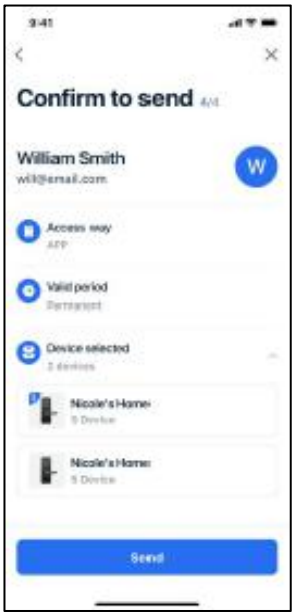

3.7.2.2.Password

Add a password, including a one-time password and a periodic password, for the user to use the password space in the corresponding time range

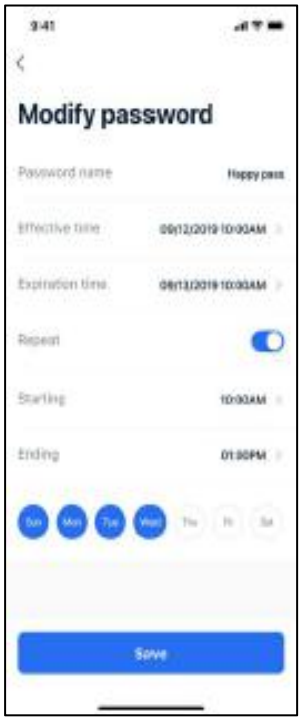

Guarantee

Customer Name：_____

Customer Calls ：_____

Purchase Date ：_____

Product Name ：_____

Product Model ：_____

Note:

① Please keep this card so that you can use it when you need warranty service.

② We provide you with a one-year warranty from the date of purchase.

③ This warranty service is valid for customers in any country in the world.

使用距离小于20cm的产品：使用距离（使用产品时，与人的距离）

This device complies with part 15 of the FCC Rules. Operation is subject to the following two conditions: (1) this device may not cause harmful interference, and (2) this device must accept any interference received, including interference that may cause undesired operation.
Any changes or modifications not expressly approved by the party responsible for compliance could void the user's authority to operate the equipment.
NOTE: This equipment has been tested and found to comply with the limits for a Class B digital device, pursuant to Part 15 of the FCC Rules. These limits are designed to provide reasonable protection against harmful interference in a residential installation. This equipment generates, uses and can radiate radio frequency energy and, if not installed and used in accordance with the instructions, may cause harmful interference to radio communications. However, there is no guarantee that interference will not occur in a particular installation.
If this equipment does cause harmful interference to radio or television reception,
which can be determined by turning the equipment off and on, the user is encouraged to try to correct the interference by one or more of the following measures:
-- Reorient or relocate the receiving antenna.
-- Increase the separation between the equipment and receiver.
-- Connect the equipment into an outlet on a circuit different
from that to which the receiver is connected.
-- Consult the dealer or an experienced radio/TV technician for help.
The device has been evaluated to meet general RF exposure requirement. The device can be u sed in portable exposure condition without restriction
FCC ID: 2AY4QH01A-TYAZ