mobifitness

Mobifitness smart elliptical trainer Regulus

User Guide

First edition of 2022

Please read this user guide carefully before start doing sports.

Product Installation:：

9 The installation is only 9 steps, you can enjoy the excellent sports experience right away.

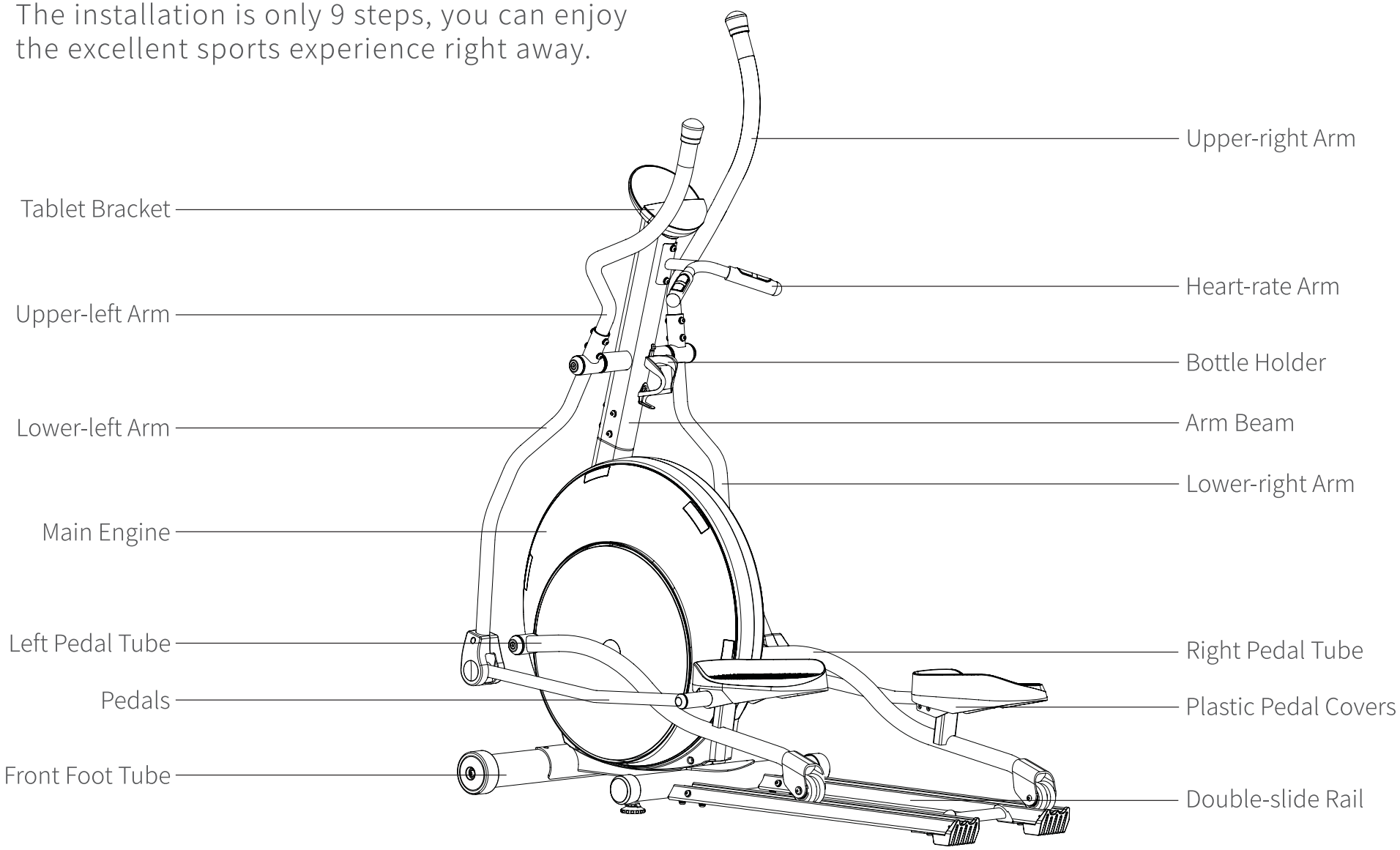

Installation Reminders:

Please check the list of accessories in the product packaging box first.

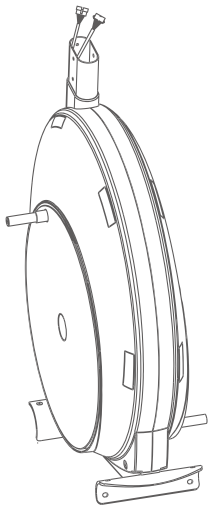

Main Engine *1

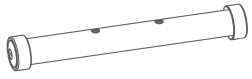

Front Foot Tube*1

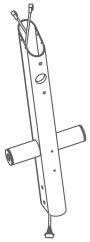

Arm Beam *1

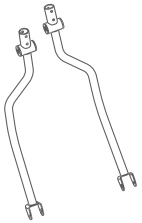

Lower Arm *2

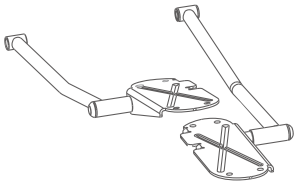

Pedal*2

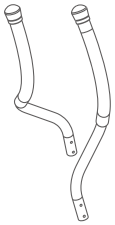

Upper Arm*2

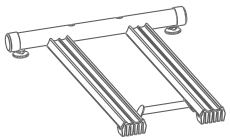

Double-slide rail *1

Central Axis*1

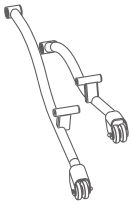

Pedal Tube*2

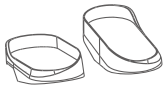

Plastic Pedal Cover*2

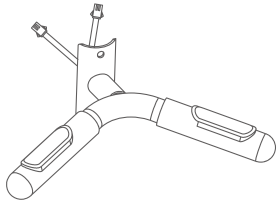

Heart Rate Arm*1

Tablet Holder*1

Bottle Holder*1

Lower Arms' Decorative Cover*2

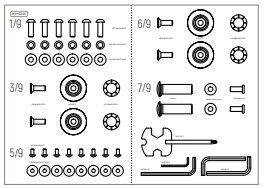

Toolkit*1

User Guide*1

MEH3202 TOOLS

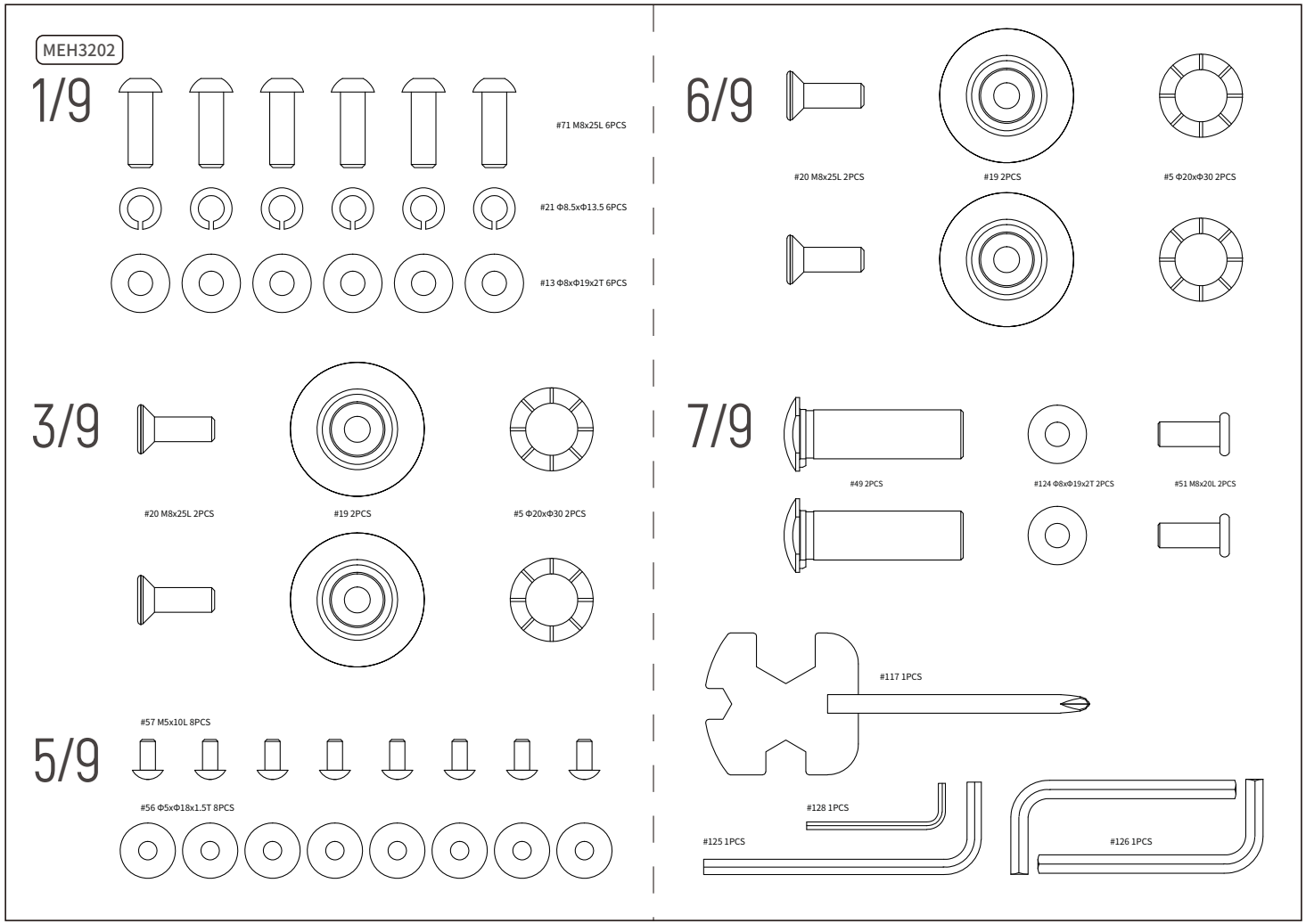

Please use the corresponding number in the installation procedure

1/9

Place the main engine on the front foot tube and double-slide rail; install and tighten the six groups of screws.

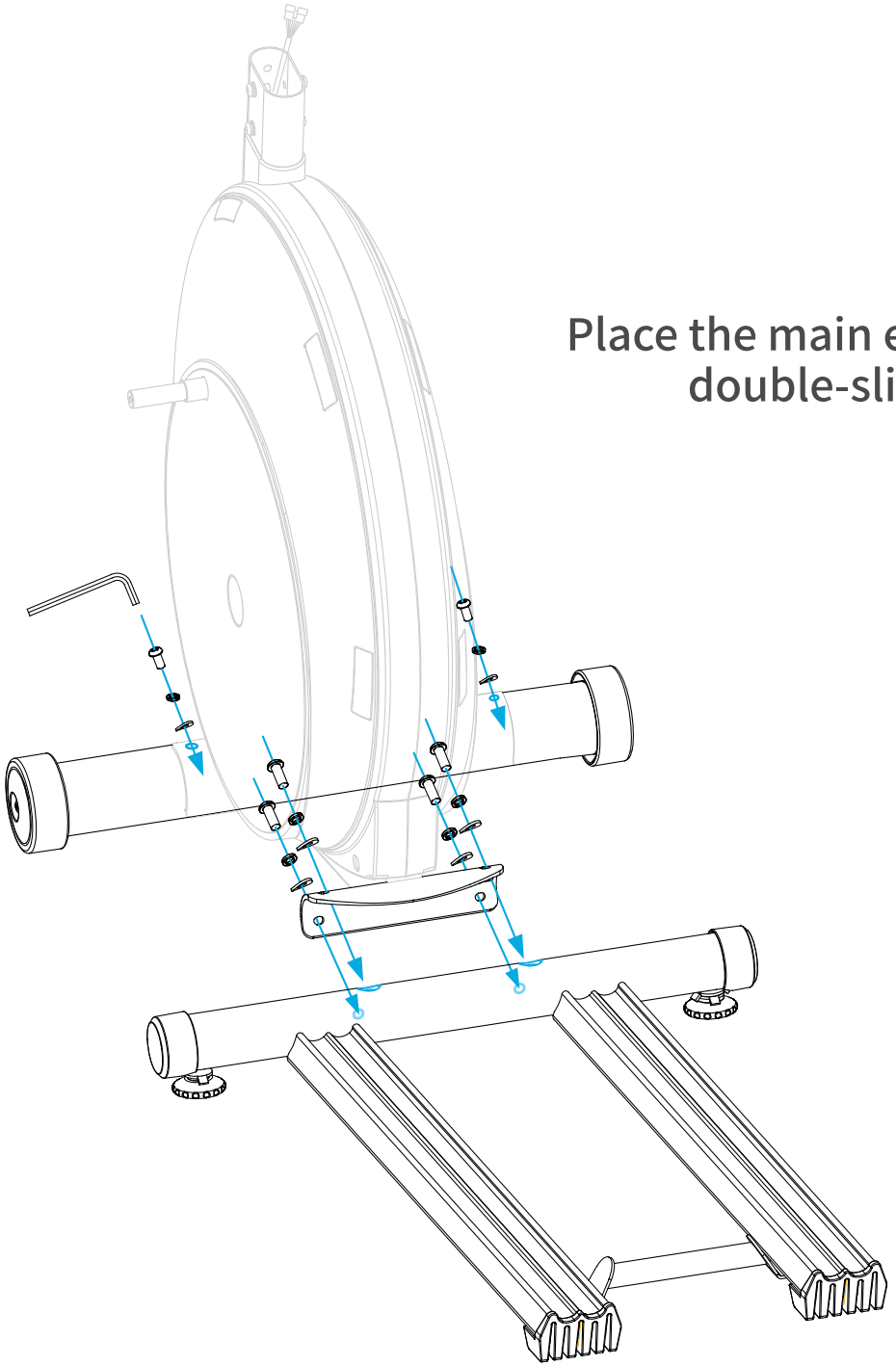

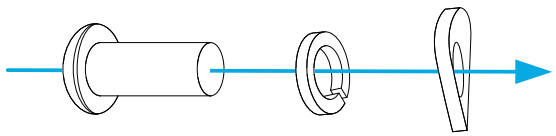

MEH3202 TOOLS		
#71 M8*25L 6PCS	#21 Ø8.5*Ø13.5 6PCS	#13 Ø8*Ø19*2T 6PCS

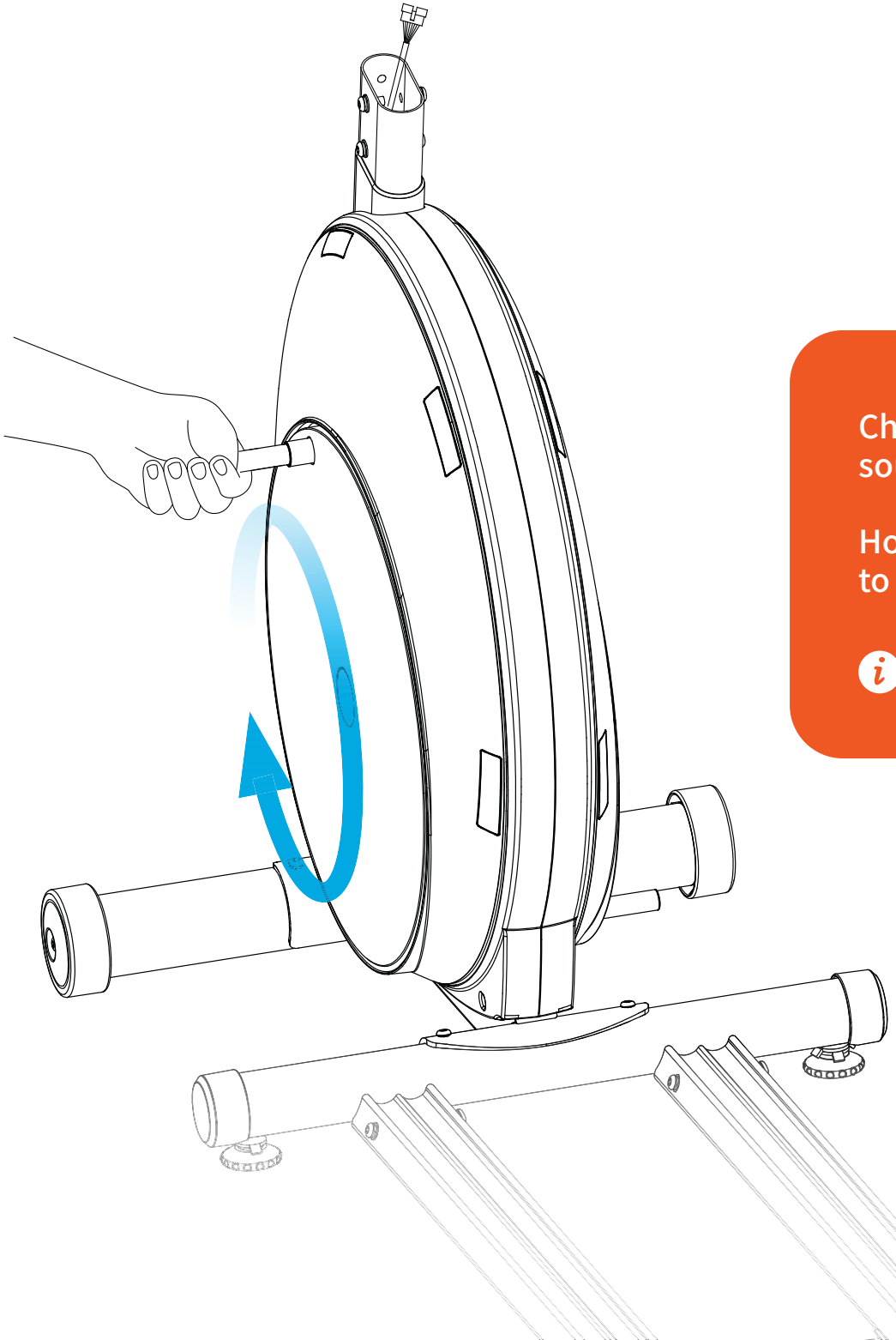

First Check 1

Check whether there is abnormal sound within the main engine.

Hold the shaft and rotate 3-4 circles to check up on the abnormal sound

Please contact customer service if there is any abnormal noise.

2/9

Unscrew the pre-installed screws; connect the data cables, and install the arm beam as well as the screws.

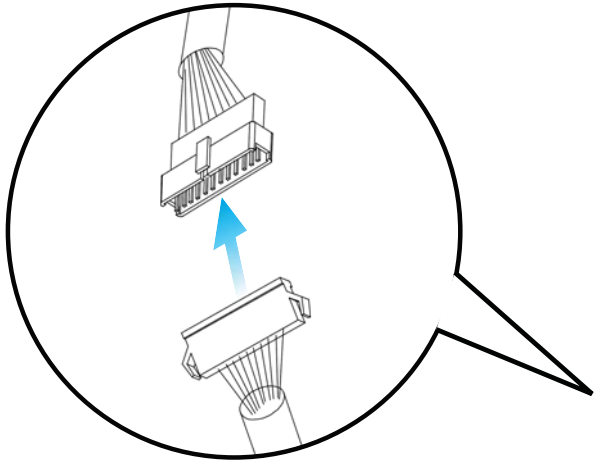

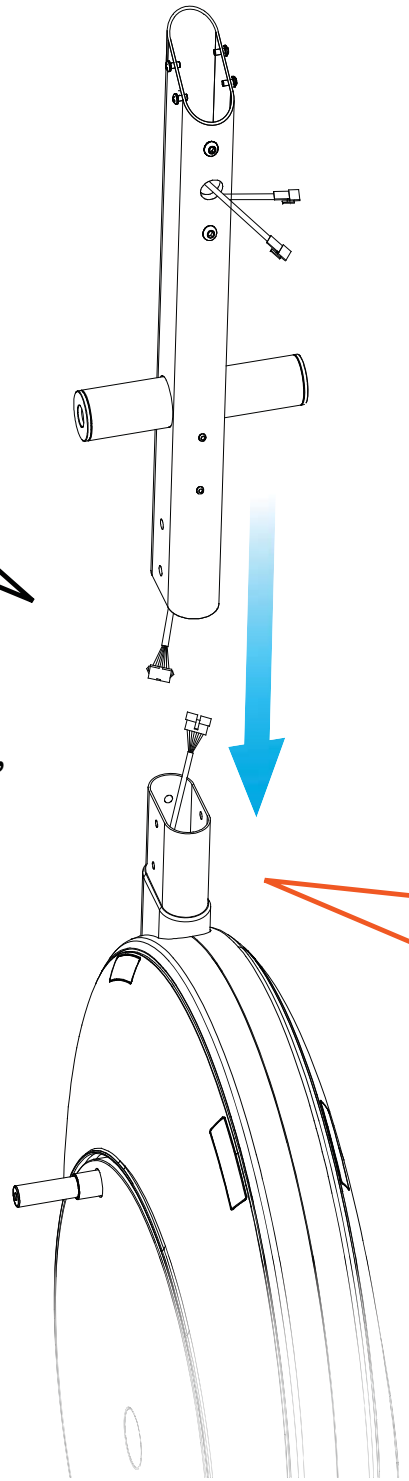

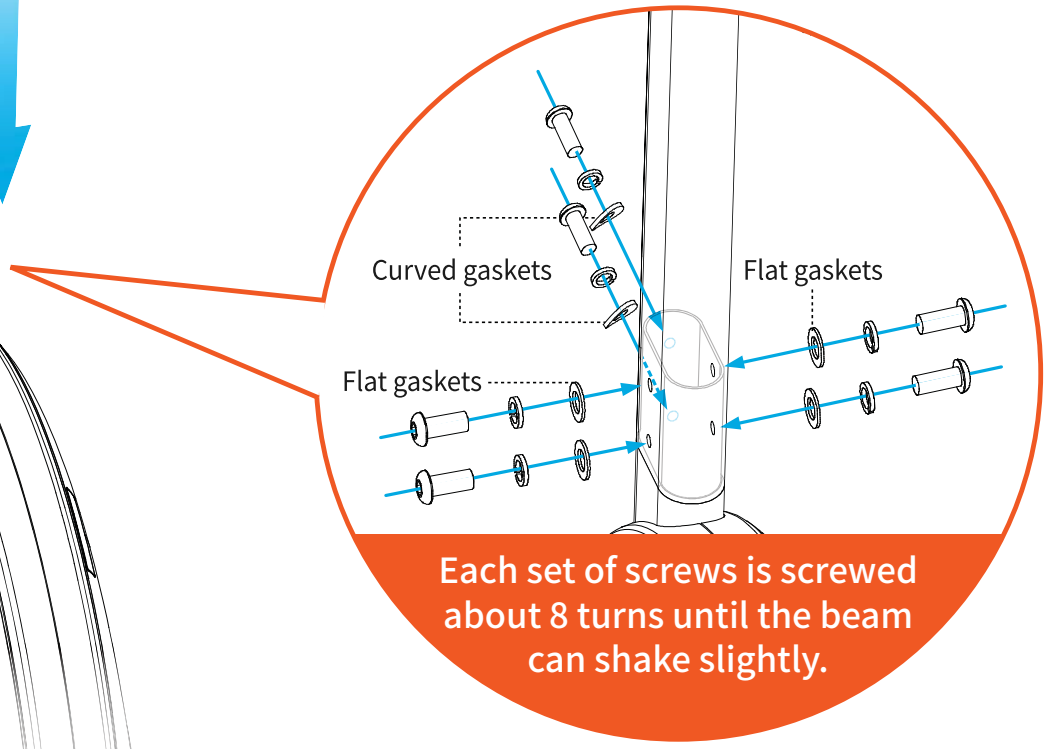

Each set of screws is screwed about 8 turns until the beam can shake slightly.

If you buy Tmall/Retro/NIO models, please refer to the special instructions on wiring.

Insert the central axis, the lower right and left arms. Rotate the wrench to lock the screws on both sides at the same time.

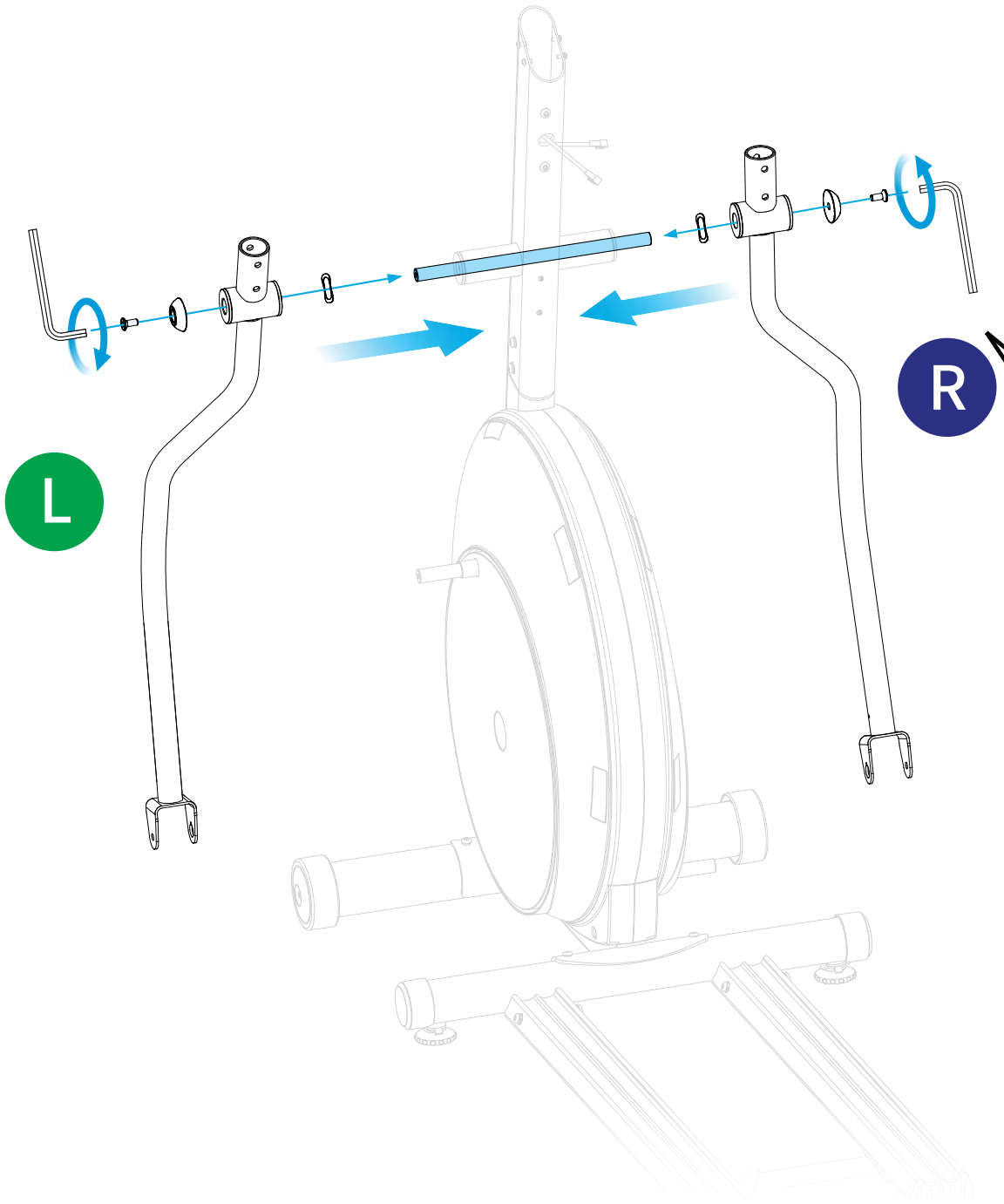

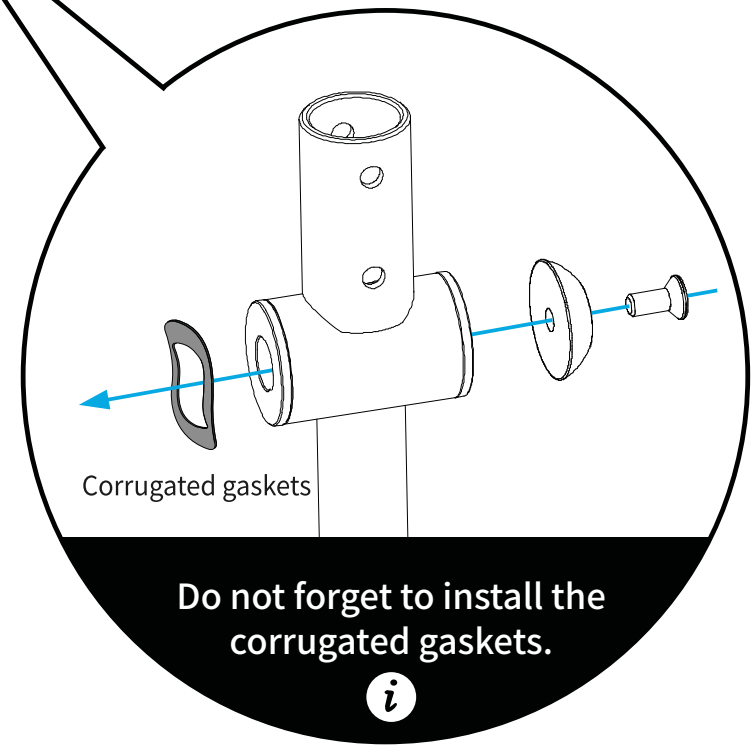

MEH3202 TOOLS		
#20 M8*25L 2PCS	#5 Ø20*Ø30 2PCS	#19 2PCS

4/9

Remove the triangle locking after connecting the pedal tube and the pedals, screw the locking back.

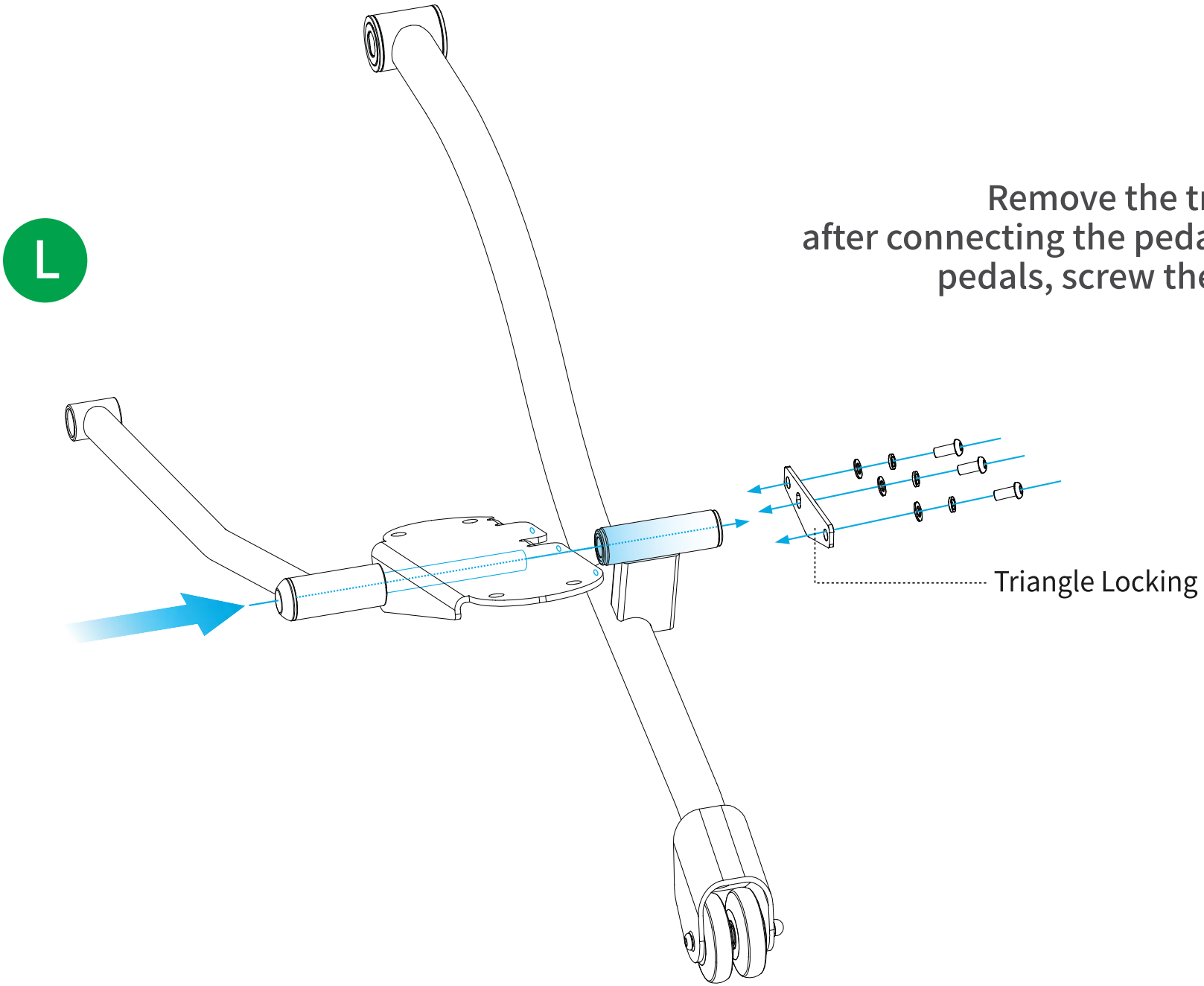

L

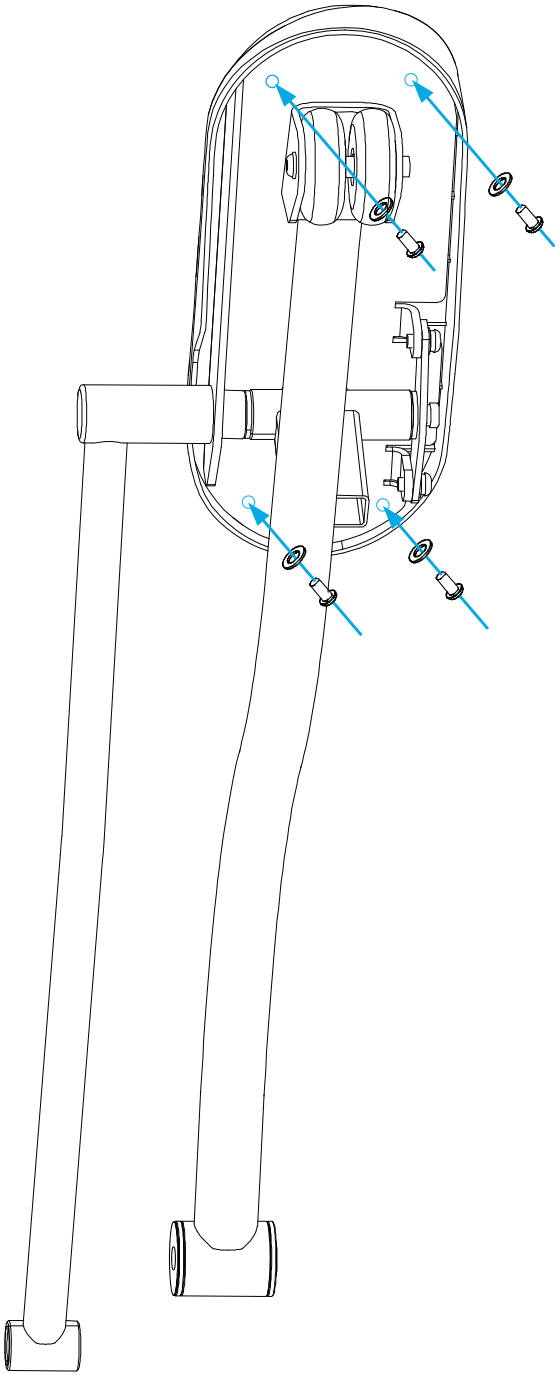

5/9

Install the plastic pedal cover, tighten four sets of screws on the left and right sides.

Turn the pedal 180° and install it from the bottom.

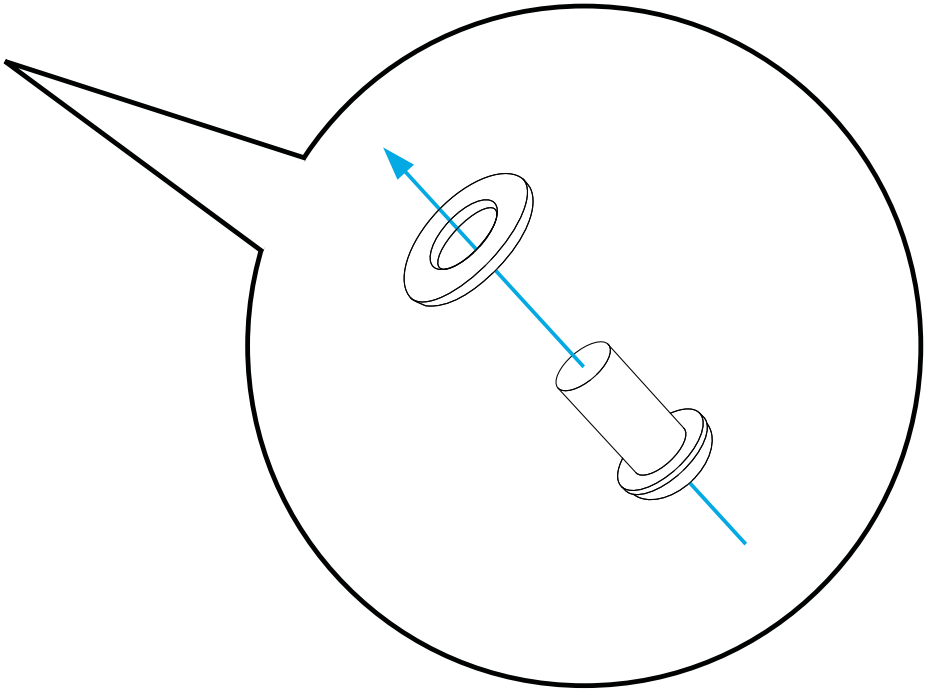

MEH3202 TOOLS	
#57 M5*10L 8PCS	#56 Ø5*Ø18*1.5T 8PCS

Connect the assembled left and right pedals with the main machine, Install and tighten the screws.

While insertion, lift the pedals tube and shake shaft up and down to install the central axis.

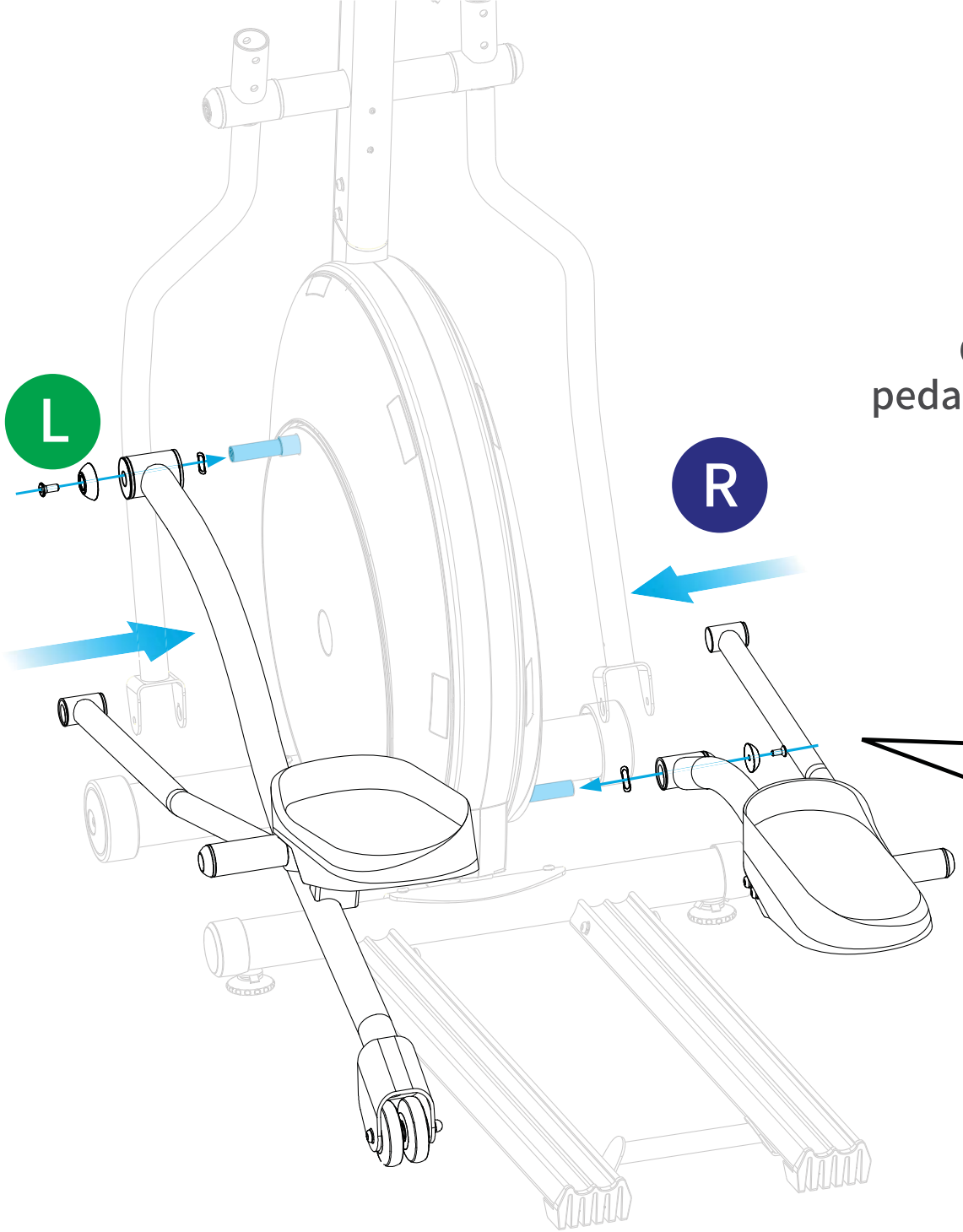

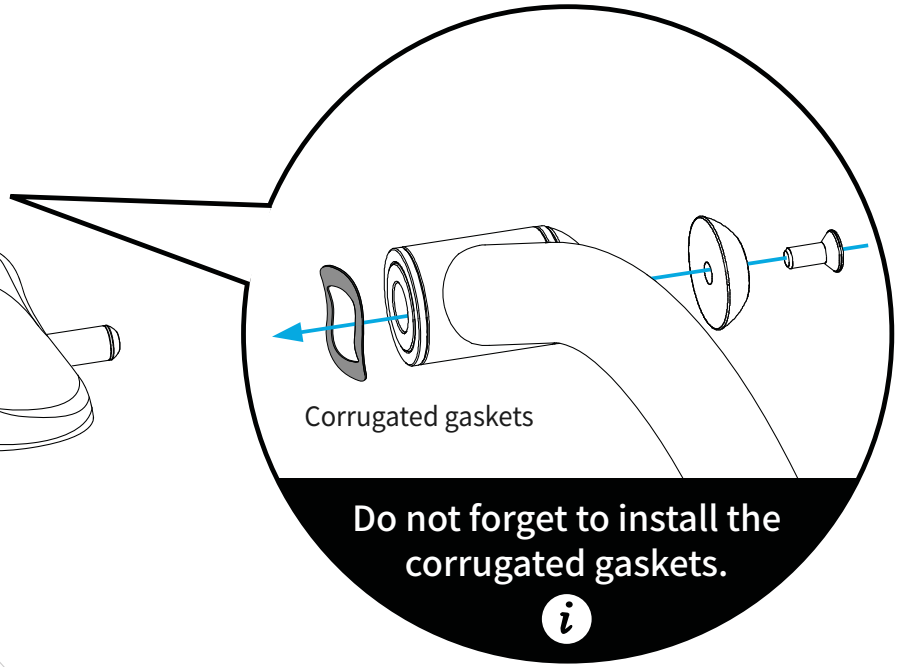

Do not forget to install the corrugated gaskets.

MEH3202 TOOLS		
#20 M8*25L 2PCS	#5 Ø20*Ø30 2PCS	#19 2PCS

7/9

Connect the lower-arm with the pedals.
Fasten the buckles and tighten the screws.

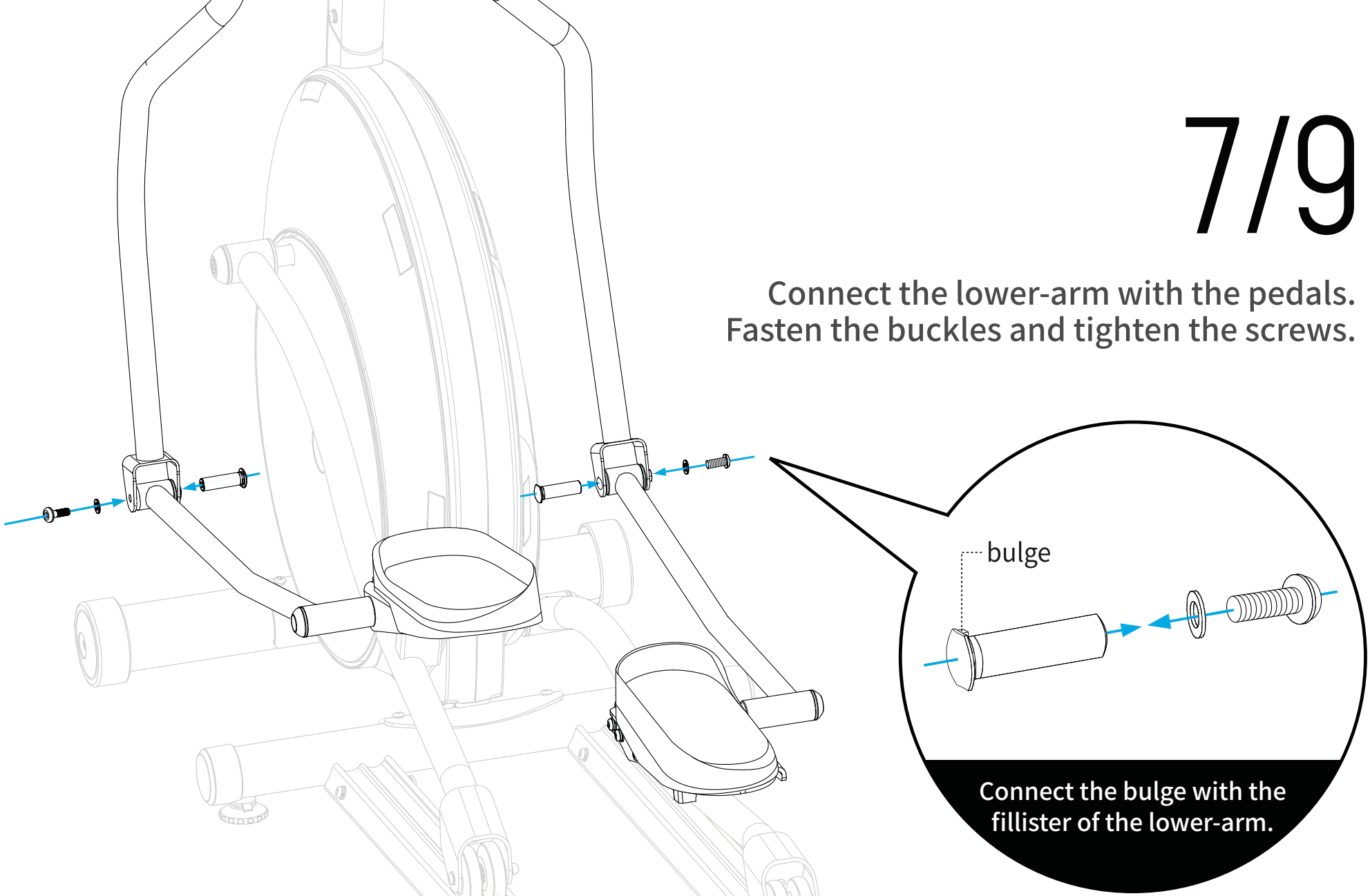

MEH3202 TOOLS		
#124 ø8*ø19*2T 2PCS	#49 2PCS	#51 M8*20L 2PCS

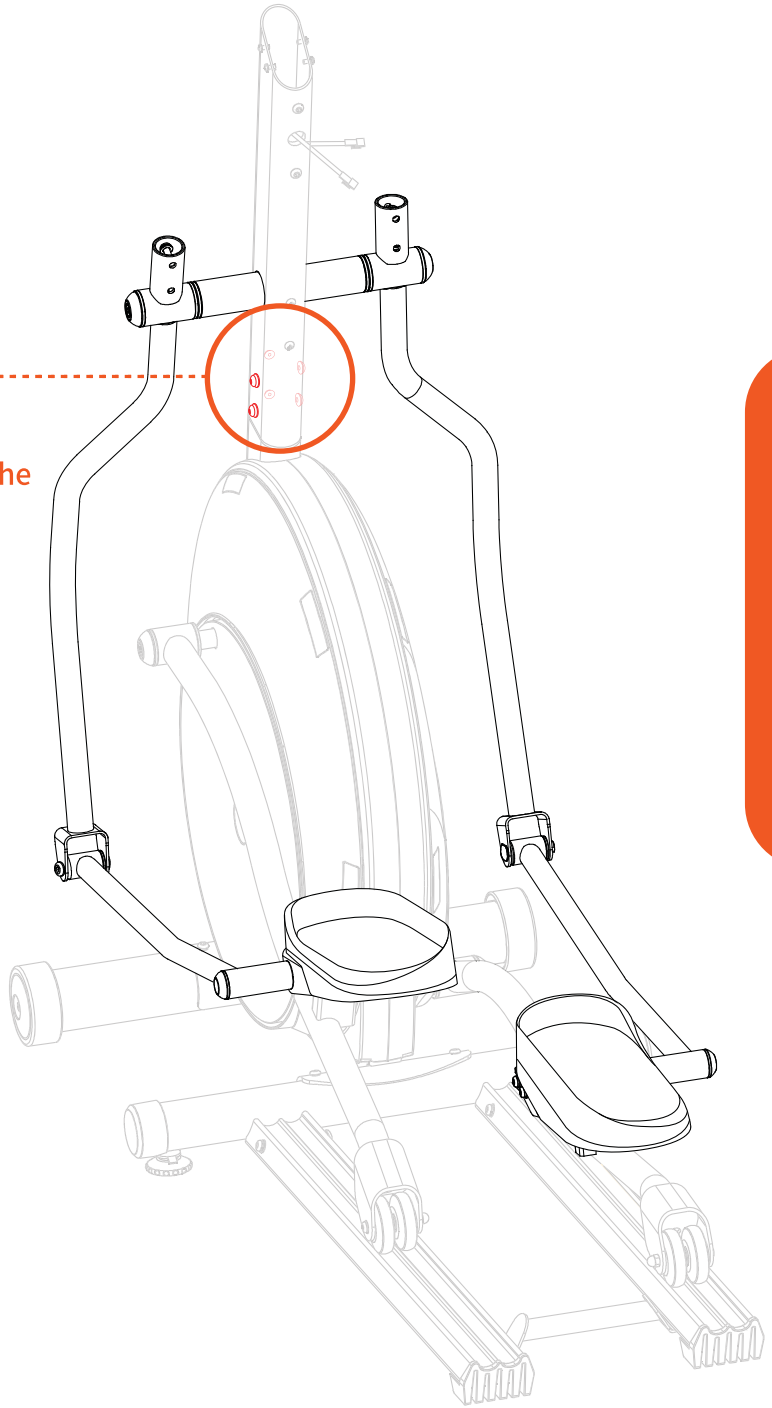

Caution:
before the quick check,
you need to make sure the
six groups of screws are
tightened.

Second Check 2

Check the abnormal noise from the machine

Make sure that the screw device of the screw measuring machine is screwed tightly, and that there is a different step of the screw measuring machine.

Please contact the customer service if there is any abnormal noise.

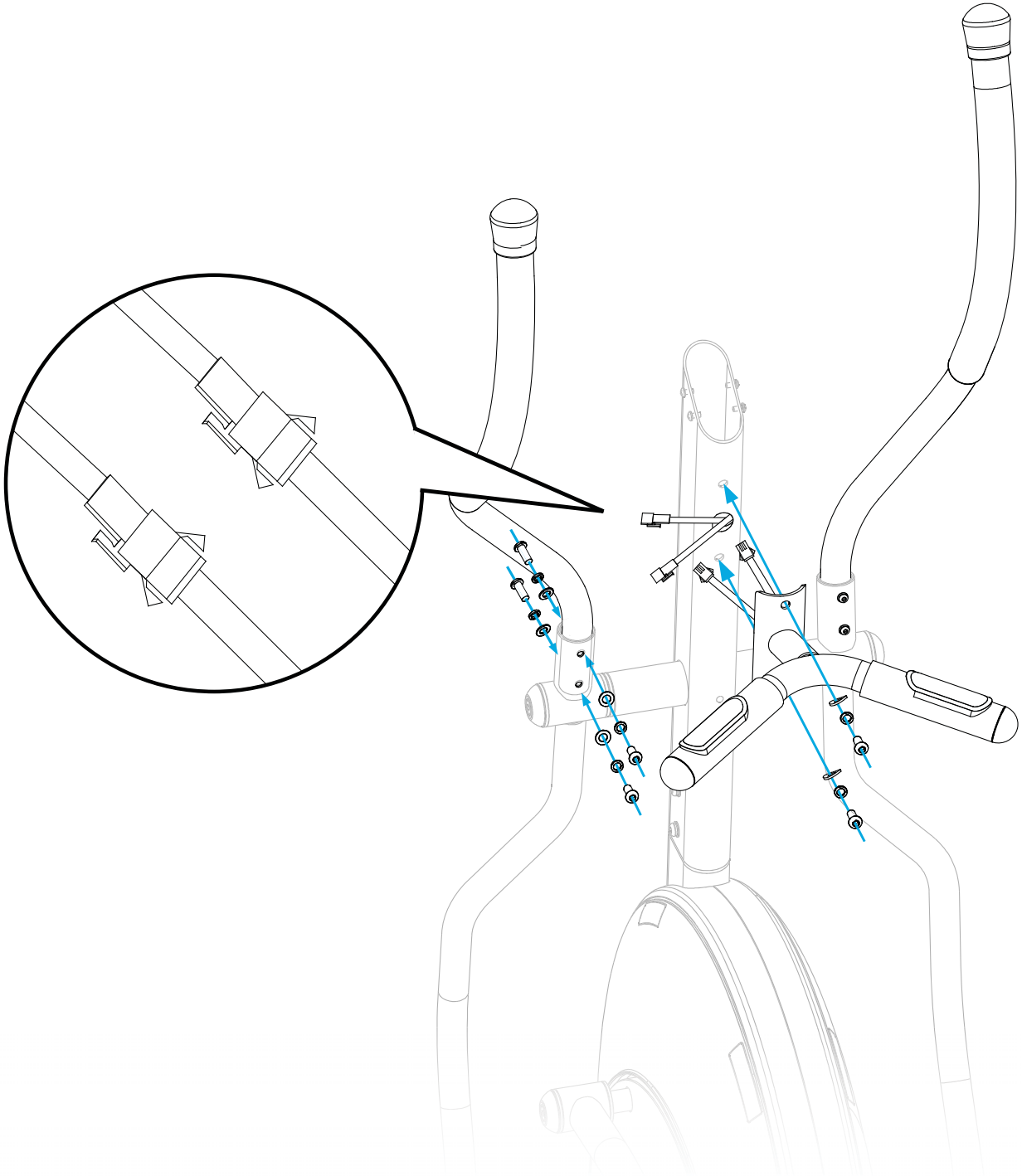

8/9

Connect the heart-rate wire, install the heart-rate arm, and the upper left and right arms.

Install the tablet holder, bottle holder, and the left and right covers.

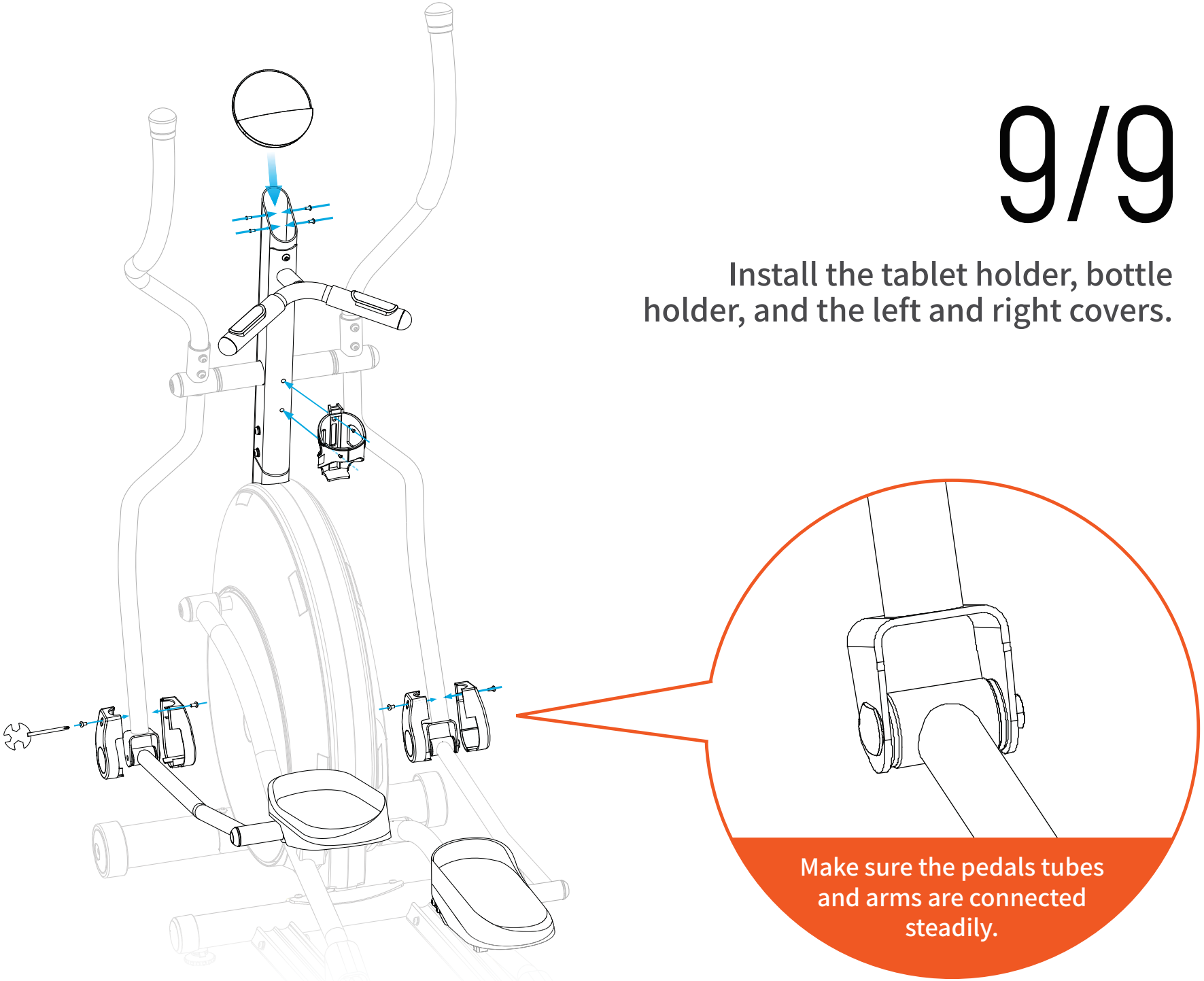

Special descriptions of other styles:

Normal models:

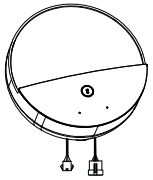

1. Please connect the 2 cables inside the arm beam with the tablet holder.

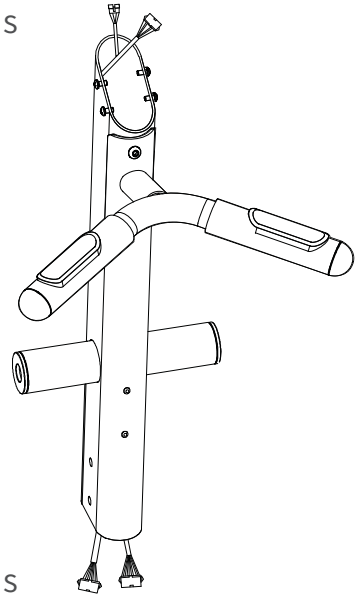

2. Please connect the 2 cables inside the arm beam with the main engine.

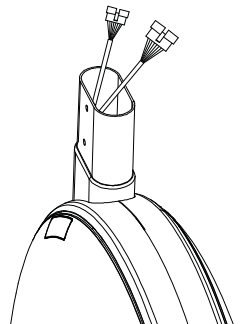

Other models:

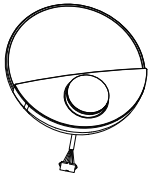

1. Please connect the only cable inside the arm beam with the tablet holder.

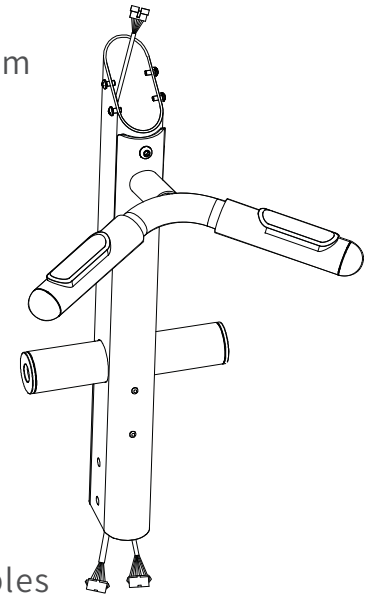

2. Please connect the 2 cables inside the arm beam with the main engine.

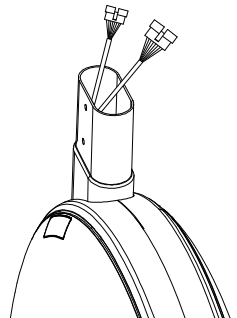

Congratulations, the installation is successful!

Before starting doing sports, please complete the following operations

Download
MobiFitness-Home Workout App

Learn
standard postures

Download MobiFitness-Home Workout App, and you will get more surprises!

Matters needing attention:

1.Before starting to use the equipment, you should consult your doctor for advice.
2.All owners of the products shoulder the responsibility to ensure that all equipment users fully understand all warnings and precautions.
3.The users whose weight is more than 120kg are not allowed to use this equipment.
4.Children under the age of six are not allowed to use this equipment, and children over the age of six should use it under adults' supervision.
5.Cultivate the standard postures to use the elliptical training machine.
6.It should be placed on a flat surface with 60% space on the back and sides. Do not place this equipment in any place that blocks air circulation.
7.Elliptical machine has inertia, and it is easy to cause sports injury when it suddenly ends at high speed. Users should slow down and wait for the machine to stop slowly before getting off the elliptical machine!
8.Make sure that the product is placed in a safe place, such as the room corner or leaning against a wall.
9.Wear appropriate sportswear while using the machine. Do not wear loose clothes which may be trapped inside the equipment. Wear sports shoes. Barefoot, socks and sandals are prohibited.
10.Do not point or insert fingers into the double-slide rail, or into any moving parts of the machine which may cause injury.
11.If users feel any pain or dizziness during the exercise, stop immediately and do relaxation exercises.
12.The company reserves the rights to improve the pictures, App contents and technical parameters; if changes are made, please be kind if users are not notified.

Maintenance:

1. Checking the fastened parts

After using the elliptical machine, please check whether the screws are loose, which may cause abnormal noise. If there is any looseness, please retighten the screws. Recheck these parts every six months.

2. Maintenance

After using the elliptical machine over six months, please add oil to the screws to keep the joint parts smoothy (cream oil).

3. Keep it in flat place

Please use it on a flat surface to avoid shaking and unexpected worn-out. If the machine base is found uneven, rotate the four foot pads attached to the ground, so that the machine is not shaking left and right, back and forth.

4. Check the double-slide rail

Check whether there is dirt and debris on the roller and slide rail.

Caution: Foreign matter will hinder the normal operation of the roller and slide rail, and it will destroy their surfaces. Regular wipe with wet tissue is suggested, so that the wear rate of roller and slide rail will be reduced.

5. Lubricate the roller

It is recommended to add the liquid transparent lubricating oil of treadmill to the rubber ring between rollers regularly.

6. Check the feed direction of the roller

Please check whether the roller is centered on the track. If it deviates from the direction, loosen the two screws at the bottom of the slide rail, step on the machine for about 20 circles to correct, and then tighten the screws.

This product is designed accustomed to the home scene with no more than 25 hours per week, and it is not suitable for the joint use of health clubs, health rooms and other commercial occasions.

Usage and Warranty

1.This warranty right is not transferable.

2.The effective warranty period is one year after purchasing the product.

3.The product is repaired for free within the warranty period after purchase (appearance is not covered by warranty).

4.In order to use the warranty service, please provide the purchase invoice and warranty card.

5.The purchase time is subject to the delivery time of the product.

6.The following situations are not covered by the warranty, and only paid maintenance services are provided (workers' working hours fee and material fee):

(a)All types of damages caused by human factors. Including the damages caused by improper use under irregular working environment, failure to follow the product instructions, etc.;

(b)Disassembly, maintenance, modification or third-party disassembly, modification and maintenance without the authorization of the company;

(c)Damages caused by poor transportation by customers themselves after purchase;

(d)Damage caused by other irresistible force (such as flooding, fire, lightning strikes and earthquakes, etc.);

(e)Please refer to the national unified price for the service charge standard: 150 in urban area and 200 in suburban area.

Warranty Card

Seller information:

Company name:

Sales period:

Contact number:

Sales address:

special seal for product quality assurance

Mo Technologies Co., Ltd
QA
www.mobifitness.com

Maintenance records:

Date of Maintenance	Failure Descriptions	Repair Descriptions	Date Repaired	Repairer

Enterprise information:

MO TECHNOLOGIES CO.,LTD
Company address: 8821,No.98 Honghai Road, Miao Town, Chongming District, Shanghai
Manufacturer: MO TECHNOLOGIES CO.,LTD
Manufacturer address：8821,No.98 Honghai Road, Miao Town, Chongming District, Shanghai
Company website: www.mobifitness.com
Customer service：service@mobifitness.com

Specification

Product name: Mobifitness smart elliptical trainer Regulus

Model: MEH3202

NET weight: 72kg

Gross weight: 82kg

Maximum load: 120kg

Packing Dimension: 1170 * 450 * 990mm

Product parameters will be slightly different due to different test tools, specific test environments and specific versions. Please refer to the actual situation.
Demonstrated figures are functional intent, and not the actual structure. Please refer to the real product as the final one. Due to the change of product batch and supply factors, in order to provide accurate product information, specification parameters and product characteristics, our company may adjust and revise the descriptions and pictures to match the actual product performance, specification, index, accessories and other information. In case of any necessary modification and adjustment mentioned above, no special notice will be given.

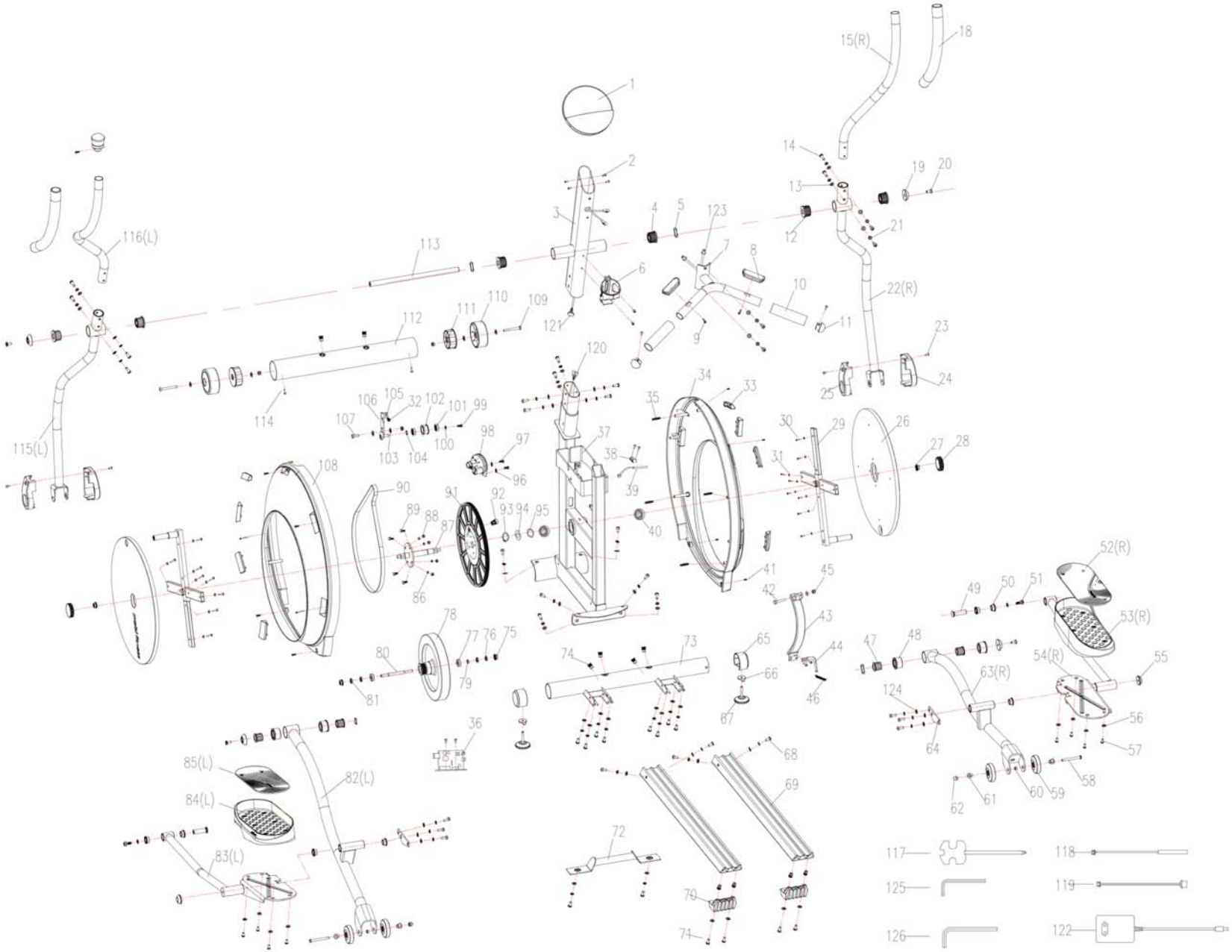
1
2
3
4
5
6
7
8
9
10
11
12
13
14
15(R)
18
19
20
21
22(R)
23
24
25
26
27
28
29
30
31
33
34
35
37
38
39
40
41
42
43
44
45
46
47
48
49
50
51
52(R)
53(R)
54(R)
55
56
57
58
59
60
61
62
63(R)
64
65
66
67
68
69
70
71
72
73
74
75
76
77
78
79
80
81
82(L)
83(L)
84(L)
85(L)
86
87
88
89
90
91
92
93
94
95
96
97
98
99
100
101
102
103
104
105
106
107
108
109
110
111
112
113
114
115(L)
116(L)
117
118
119
120
121
122
123
124
125
126

Caution: The user is cautioned that changes or modifications not expressly approved by the party responsible for compliance could void the user's authority to operate the equipment.

This device complies with Part 15 of the FCC Rules. Operation is subject to the following two conditions: (1) this device may not cause harmful interference, and (2) this device must accept any interference received, including interference that may cause undesired operation.

NOTE: This equipment has been tested and found to comply with the limits for a Class B digital device, pursuant to Part 15 of the FCC Rules. These limits are designed to provide reasonable protection against harmful interference in a residential installation. This equipment generates, uses and can radiate radio frequency energy and, if not installed and used in

accordance with the instructions, may cause harmful interference to radio communications. However, there is no guarantee that interference will not occur in a particular installation.
If this equipment does cause harmful interference to radio or television reception, which can be determined by turning the equipment off and on, the user is encouraged to try to correct the interference by one or more of the following measures:
-- Reorient or relocate the receiving antenna.
-- Increase the separation between the equipment and receiver.
-- Connect the equipment into an outlet on a circuit different from that to which the receiver is connected.
-- Consult the dealer or an experienced radio/TV technician for help.

FCC Radiation Exposure Statement
This equipment complies with FCC radiation exposure limits set forth for an uncontrolled environment. This equipment should be installed and operated with a minimum distance of 20cm between the radiator and your body.
This transmitter must not be co-located or operating in conjunction with any other antenna or transmitter.

mobifitness

MO TECHNOLOGIES CO.,LTD

Company address: 8821,No.98 Honghai Road, Miao Town, Chongming District, Shanghai

Manufacturer: MO TECHNOLOGIES CO.,LTD

Manufacturer address：8821,No.98 Honghai Road, Miao Town, Chongming District, Shanghai

Company website: www.mobifitness.com

Customer service：service@mobifitness.com