User Manual

Package Contents

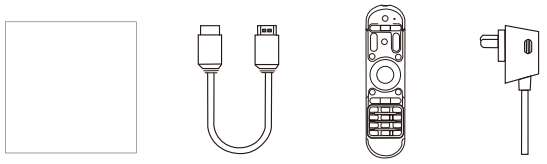

Device x1 HDMI Cable x1 Remote Control x1 Power Adaptor x1

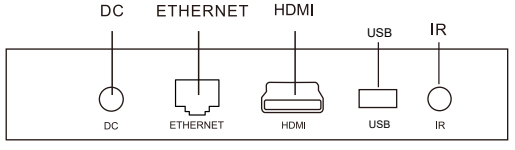

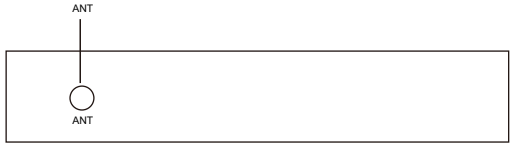

Connection Diagram

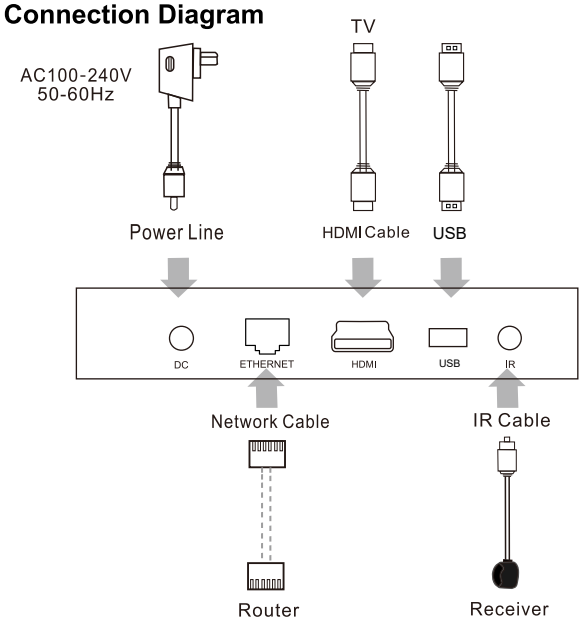

The terms HDMI, HDMI High-Definition Multimedia Interface, and the HDMI Logo are trademarks or registered trademarks of HDMI Licensing Administrator, Inc.

Installation Steps

01 Connect the TV Box with the power supply.

02 Connect the TV Box to your TV with an HDMI cable or AV cable.

03 For a wired connection,plug in Ethernet cable from the TV Box to your modem or router.
For wireless,choose your Wi-Fi network and input your Wi-Fi password.

Multi-screen Interaction

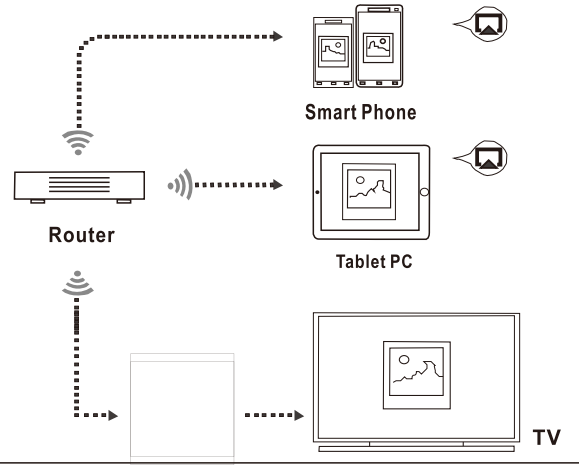

The Screen Casting

Introduction:

The TV Box lets you play photos,music,and videos from your smart phone or tablet computer on your TV.

Preparation:

Make sure your device(s) and TV Box are connected to the same network.

How to use:

After your device(s) and TV Box are connected to the same network,the logo will show up in the related applications of your device(s).Click the and share the photos,music and videos on TV.

Key Features

Amlogic S905X3 64-bit Quad Core ARM® Cortex™ A55 CPU@G31™ MP2 GPU processor.

8K video decoding 10-bit HEVC and AVS+codec support,H.265 up to 8K 60Hz.

RAM 2GB:10/100M Ethernet,802.11b/g/n 2.4G WiFi.BT4.X
RAM 4GB:10/100/1000M Ethernet,802.11b/g/n/ac 2.4G and 5G WiFi.BT4.X

Android 9.0 OS,OTA upgrade support.

Warning:
Changes or modifications to this unit not expressly approved by the party responsible for compliance could void the user's authority to operate the equipment.

NOTE:
This device complies with part 15 of the FCC Rules. Operation is subject to the following two conditions: (1) This device may not cause harmful interference, and (2) this device must accept any interference received, including interference that may cause undesired operation.

FCC Statement:
This equipment has been tested and found to comply with the limits for a Class B digital device, pursuant to part 15 of the FCC Rules. These limits are designed to provide reasonable protection against harmful interference in a residential installation. This equipment generates, uses and can radiate radio frequency energy and, if not installed and used in accordance with the instructions, may cause harmful interference to radio communications. However, there is no guarantee that interference will not occur in a particular installation. If this equipment does cause harmful interference to radio or television reception, which can be determined by turning the equipment off and on, the user is encouraged to try to correct the interference by one or more of the following measures:
—Reorient or relocate the receiving antenna.
—Increase the separation between the equipment and receiver.
—Connect the equipment into an outlet on a circuit different from that to which the receiver is connected.
—Consult the dealer or an experienced radio/TV technician for help.

RF exposure compliance statement:
This device has been evaluated to meet the general RF exposure requirement

Please make sure that the product is normally connected to the wifi network during use, and the contact voltage is good during use. In order to have a good experience of using the product, please keep at least 20 cm.