尺寸： 70*120mm，105g 铜版纸， 三折页，双面单黑印刷

3 in 1 Foldable

Wireless Charger Stand

User Manual

Model No. **T13**

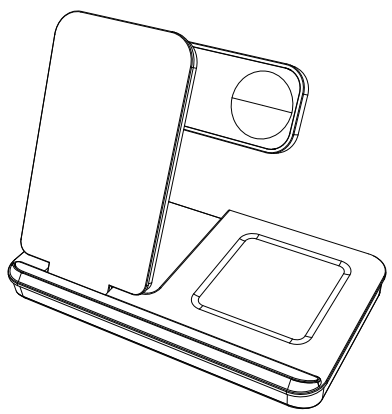

Note : For best performance and safety,please read this manual carefully before using the product

Brochure

This product is a wireless charging solution equipped with advanced control chips and certified under the CE certification protocol. This innovative device supports various fast charging protocols from third-party manufacturers to ensure compatibility with mainstream charging technologies.

The device simplifies the charging process. It has three independent built -in chips,which can intelligently match mobile phones,Bluetooth earphones and Apple watches at the same time.Only using one cable can charge imultiple devices without any interference or affecting safety.The mobile phone terminal and the earphone provide wide compatibility to accommodate various wireless charging -enabled mobile phone and earphones. For the Watch terminal, we have implemented an upgraded magnetic suction coil. The earphone terminal has wide compatibility.It can realize wireless fast charging well without damaging the device.

This product provides efficient and safe and fast charging,and does not cause any harm to your equipment It supports the maximum output of 15W on a single channel to achieve fast charging. At the same time, the product integrates a number of advanced features to ensure safe and efficient charging. It includes intelligent foreign object detection. If any foreign object detection is detected on the charging surface. it will prevent charging.It also has input voltage mutation detection, over-current detection, coil peak limit, and overheating limit environment for your mobile phone.

The product has a sleek appearance and can be folded for compact storage, making it suitable for various scenarios such as home, office, and travel. You can rely on it to provide fast and reliable charging wherever and whenever you need it.

Specifications

Model:T13
Input:9V/12V 3A(MAX)
Output 1: Phone 15W(MAX)
Output 2: Watch 2.5W(MAX)
Output 3: Earphones 3.5W(MAX)
Dimension: about 160*136*19mm
Material: PC+ABS
Weight: N.W. about 192g(without power adapter+USB cable)

Product details

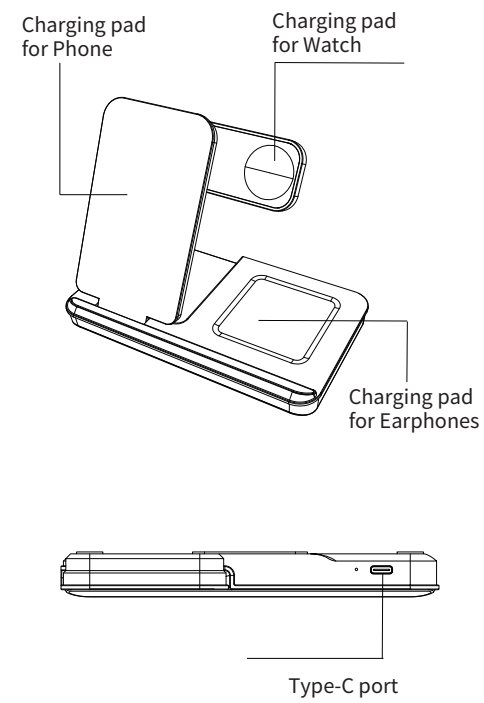

How to operate

1,Connect the USB port of the USB cable to the adapter and connect the typy-Cport to the wireless charger, The indicator light will shine as operating

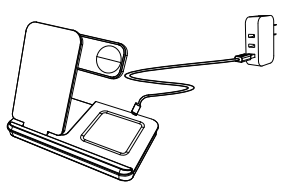

2,Place the devices on the wireless charging position

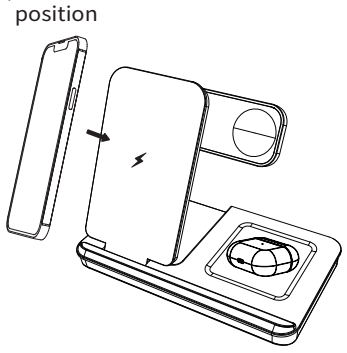

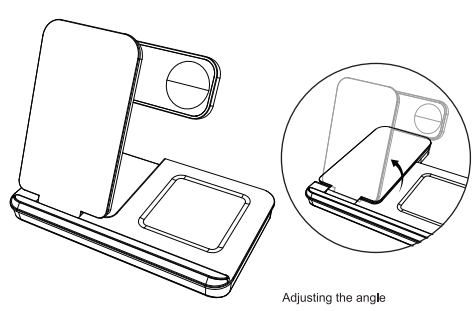

Foldable Phone Holder

The foldable stand provides sturdy support to charge three devices at the same time and can also be used as a phone holder.

Precautions

- Keep it out of the reach of children;
- It is prohibited to disassemble the product without permission;
- Avoid strong falls and collisions;
- Non-specialized person does not disassemble and repair this product;
- Pay special attention to that this product needs to be matched with QC2.0/QC3.0 and other formal and certified chargers;
- Do not attach ring buckles, articles that increase the thickness of the phone or metal objects on the back of the phone to avoid affecting the use of wireless charging and charging power of the phone;
- Do not put mobile phones, watches and earphones on the charger or a long time after they are fully charged. Cut off the power supply of the charger after charging.

Product Standard Code:Q/AQL 003–2017

FCC Requirement

Any changes or modifications not expressly approved by the party responsible for compliance could void the user’s authority to operate the equipment.

This device complies with Part 15 of the FCC Rules. Operation is subject to the following two conditions:

(1)this device may not cause harmful interference, and (2)this device must accept any interference received, including interference that may cause undesired operation.

Note: This equipment has been tested and found to comply with the limits for a Class B digital device, pursuant to Part 15 of the FCC Rules. These limits are designed to provide reasonable protection against harmful interference in a residential installation. This equipment generates, uses, and can radiate radio frequency energy, and if not installed and used in accordance with the instructions, may cause harmful interference to radio communications. However, there is no guarantee that interference will not occur in a particular installation. If this equipment does cause harmful interference to radio or television reception, which can be determined by turning the equipment off and on, the user is encouraged to try to correct the interference by one or more of the following measures:

–Reorient or relocate the receiving antenna.
–Increase the separation between the equipment and receiver.
–Connect the equipment into an outlet on a circuit different from that to which the receiver is connected.
–Consult the dealer or an experienced radio/TV technician for help.

This equipment complies with FCC radiation exposure limits set forth for an uncontrolled environment.

This equipment should be installed and operated with a minimum distance of 20cm between the radiator & your body.

This transmitter must not be co-located or operating in conjunction with any other antenna or transmitter.