User's Manual

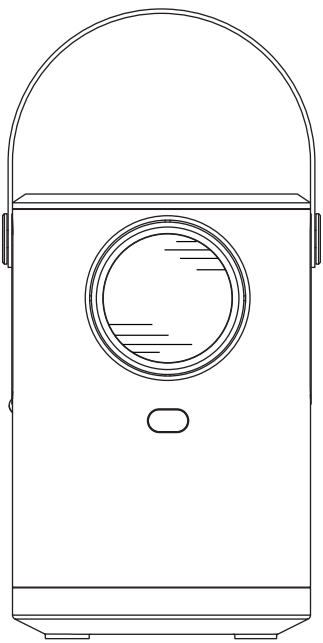

User's Manual-Contents

Precautions 01

List of package 03

Outlook 04

Keys and Remote Control 05

Installation and Projection Mode 06

Turn ON/OFF 07

Focus and keystone 08

Variety of devices 09

Speaker Mode and Bluetooth 10

Projection distance and screen size 11

Matters needing attention 11

Filter and maintainance 12

Technical Specification 12

Precautions

(1) Important safety precautions:

The following safety instructions ensure that the unit maintains a long service life and prevents fire or electric shock.

• Please read them carefully and be aware of all the warnings below.

• Do not install in a place with poor ventilation.

• Do not install in hot and humid places.

• Do not block the ventilation holes (intake or exhaust).

• Do not install in dusty places.

• Do not install near high temperature or smoke sensors, as this may cause of sensors malfunction.

• Do not install in a place where the air–conditioning is directly blown by the cold air, otherwise it may be condensed by water vapor.
Or the temperature rises and the body malfunctions.

(2) installation:

• For best results, use the unit in a dark room.

• Use the unit with care. Dropping or bumping may damage the components inside the unit.

(3) power supply:

• Use the power cord carefully to avoid excessive bending and damage to the power cord can result in electric shock or fire.

• After using the unit, unplug the power cord from the power outlet.

(4) Cleaning:

• Unplug the power cord from the unit and periodically clean the cabinet with a damp cloth. If it is dirty, use a neutral detergent. Never use strong detergents or solvents such as alcohol or thinner.

• The lens should be cleaned with an air brush or lens paper, and be careful not to scratch or scratch the lens.

• Clean the vents and speakers on the unit regularly with a vacuum cleaner. If the vents are clogged with dust, the machine may overheat and cause a malfunction. When using the vacuum cleaner, use a soft brush. Do not use hard accessories such as tools for cleaning the gap to prevent damage to the unit.

(5) Notes on fire and electric shock:

• Make sure that the air vents are not blocked to prevent hot air from accumulating in the unit and prevent foreign objects such as paper clips or paper dust from falling into the unit. Do not attempt to retrieve objects falling into the unit. Never insert any metal objects, such as wire or screwdriver, into the unit. In the unlikely event that any item falls into the unit, immediately turn off the power and remove it from a qualified service technician. Do not place any liquid on top of the unit.

(6) Carrying the projector:

• When transporting the projector, use a soft packaging material. Do not subject the projector to violent machine vibration.

(7) High temperature attention:

• Before projection and after projection, the vicinity of the exhaust port will become hot. Do not touch it with your hands to avoid burns.

(8) Installed in a location away from the wall:

• To maintain the performance and reliability of the projector, leave at least 30 CM between the projector and the wall.

List of package

Open the package and you will find the following items in the package;

LED projector

Remote control

Power cable

Lens cover

Product manual

HDMI cable

3-in-1 video cable

The attachment is applicable to your area and may be different from the picture. Please refer to the actual package.

Outlook

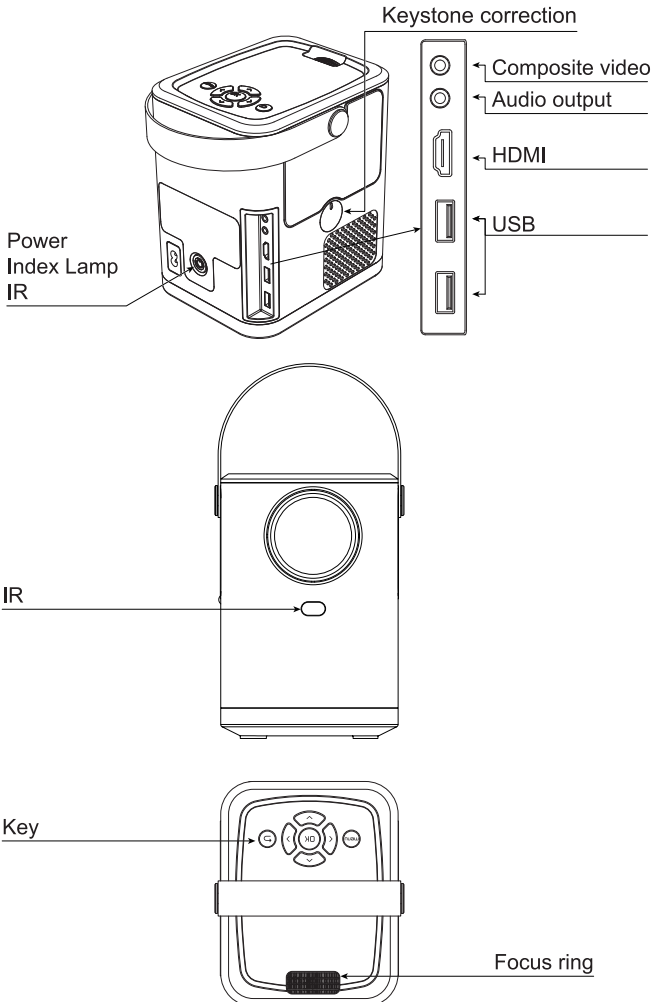
Keystone correction
Composite video
Audio output
HDMI
USB
Power
Index Lamp
IR
IR
Key
OK
MENU
Focus ring

Keys and Remote Control

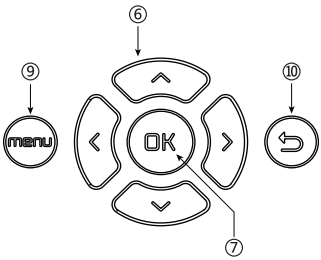

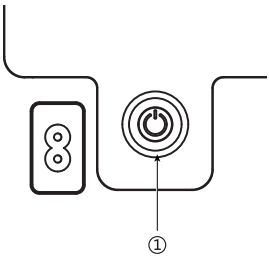

1. Power On/Off
2. Mute
3. Source
4. Bluetooth Soundbar
5. Keystone correction Settings
6. Arrow Keys
7. OK / play
8. Home
9. Menu
10. Exit / Back
11. Volume Key

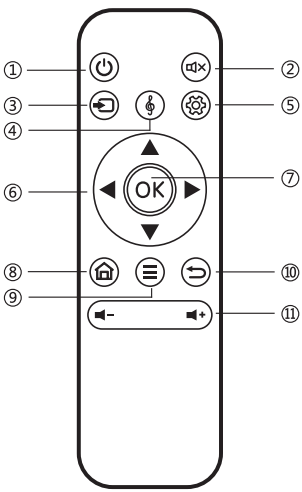

Installation and Projection Mode

Note:

Please refer to the picture below to install the project on the ceiling
Do not put the projector near the heat source to prevent the projector from overheating;

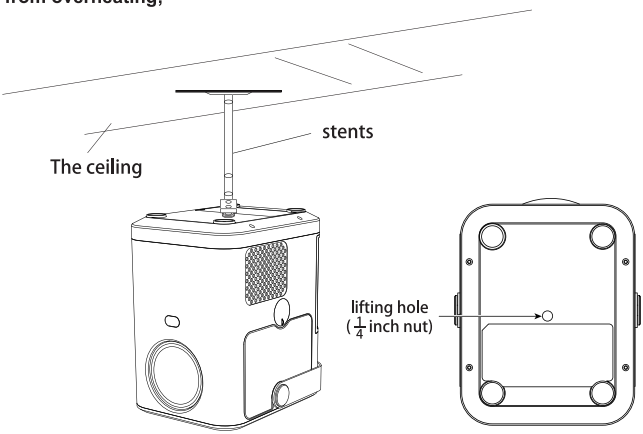

Note:

When installing projectors on the ceiling, be sure to use screws of the right quality. The screws are deep enough to prevent falling down.

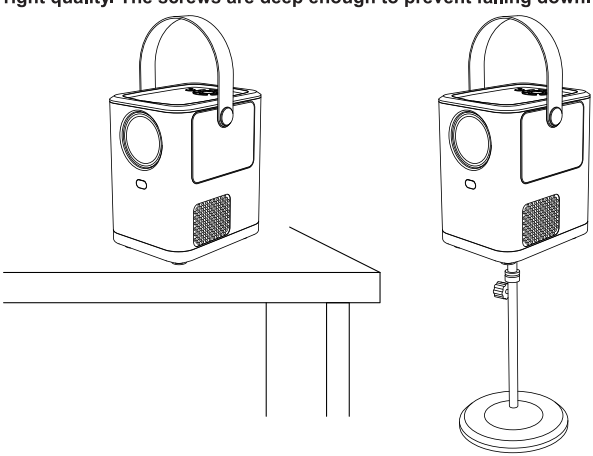

Turn ON/OFF

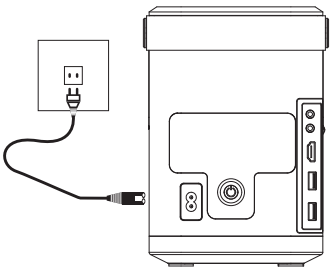

1

Plug the power cord into the socket.(insert the machine end first and then the socket)

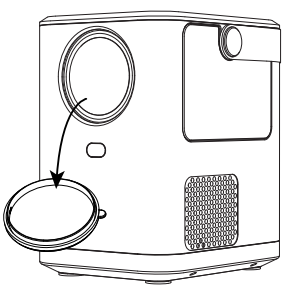

2

Remove the lens cap and store the device in a cool and dry place.

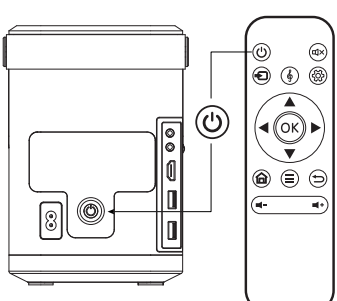

3

Press the power button on the body or remote control.(the fuselage indicator light is red and long on)

Focus and keystone

To Focus

When the distance between the projector and the screen is greater than 1.2m, the picture is found blurred(Figure 1), Please move the focus ring until the picture is clear(Figure 2).

Figure 1

Figure 2

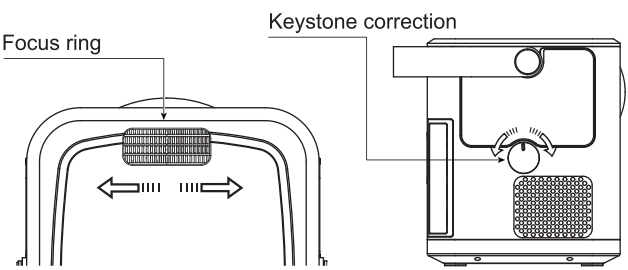

Keystone correction:

It is recommended to adjust the keystone correction ring in case of keystone distortion in the image:

Note:

Some versions adopt digital keystone, please refer to menu instructions.

Variety of devices

1. Press the “source” button on the keyboard or the remote control to display the menu shown in the following figure.
2. Select “source” in the menu interface and select the corresponding signal channel.

Menu > Source

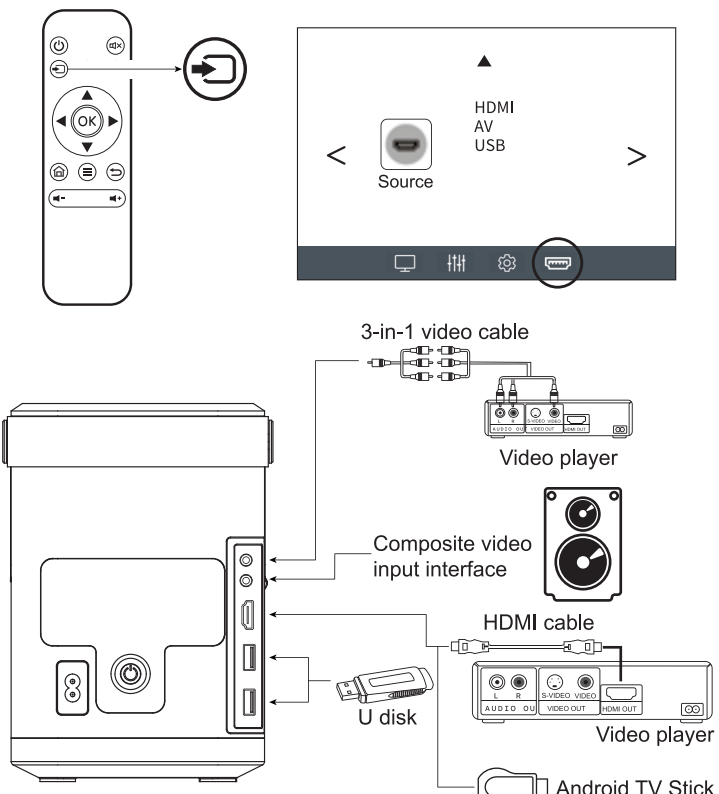

Speaker Mode and Bluetooth

Bluetooth Soundbar Mode

The Bluetooth Soundbar (stereo-speaker) mode is turned on by default, when the projector is powered on.

To click " 𝄞 " on the remote control, or to choose from submenu "Sound", to turn on the Bluetooth-Speaker Soundbar mode.

Please to press "ON/OFF" or "Power" key to exit soundbar mode, and to project the videos.

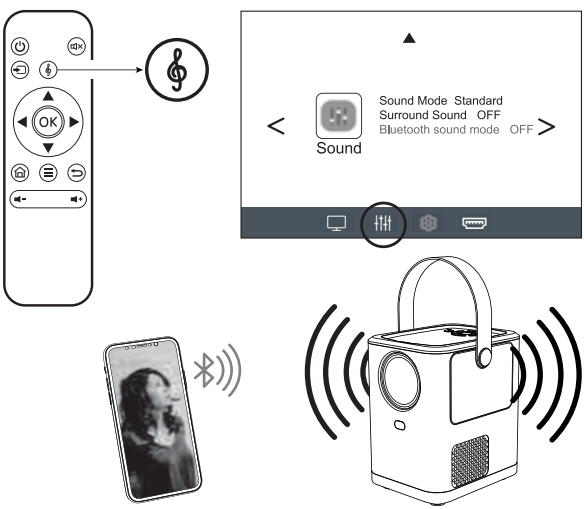

Note:

1.The Bluetooth Soundbar mode is automatically turned on when being powered on ;
2.The Bluetooth ID Sound99 or projector BT ;
3.The sound from Bluetooth will be turned off when resuming back to projector mode .
4.Please be noted that, when turned on the soundbar mode, the optical engine will be turned off, so there will be no projection.

Projection distance and screen size

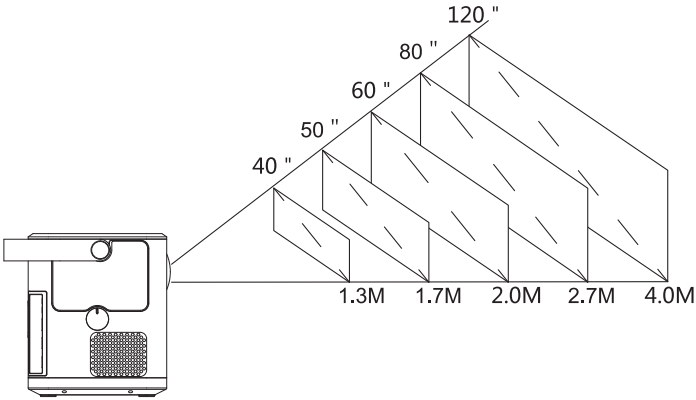

For reference

Matters needing attention

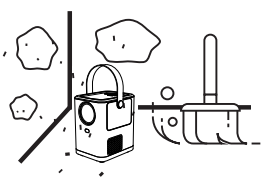

1.Do not put the projector in the dusty place

2.Do not place moisture on the projector

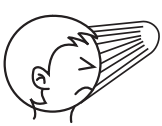

3.Do not look directly at the lens during use

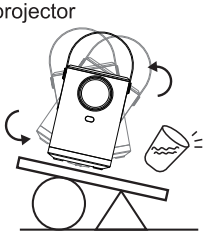

4.Do not put the projector in an unstable place

Filter and maintainance

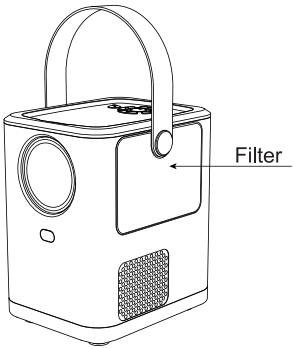

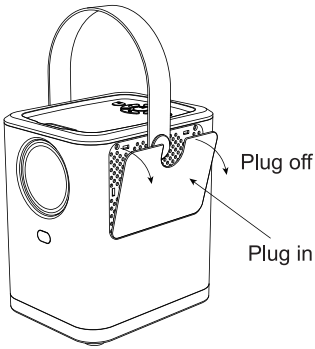

Clean the filter regularly:

After using the machine for a period of time, dust is found on the dustproof filter, which will affect the service life of the machine. Please use a wet cloth to remove the dust above, when necessary, you can remove the filter to wash it.

Note:

To dry the filter before plugging in it back.

Technical Specification

Projection System		LED+LCD	
Native Resolution		1280*720 Physical	
Keystone		Manul Correction±15°	
Sound System		5W*2 Stereo Speakers with 400CC Sound Chamber	
Colors	16.77 M	Throw Ratio	1.66:1
Lifespan	>20,000 Hours	Power	90~240V Ac
Inputs/Outputs	HDMI, USB x 2, Audio Out, Composite Video, Bluetooth		

FCC Warning

This device complies with part 15 of the FCC rules. Operation is subject to the following two conditions: (1) this device may not cause harmful interference, and (2) this device must accept any inte rference received, including interference that may cause undesired operation.

Changes or modifications not expressly approved by the party responsible for compliance could void the user's authority to operate the equipment.

NOTE: This equipment has been tested and found to comply with the limits for a Class B digital device, pursuant to part 15 of the FCC Rules. These limits are designed to provide reasonable protection against harmful interference in a residential installation. This equipment generates uses and can radiate radio frequency energy and, if not installed and used in accordance with the instructions, may cause harmful interference to radio communications. However, there is no guarantee that interference will not occur in a particular installation. If this equipment does cause harmful interferenceto radio or television reception, which can be determined by turning the equipment off and on, the user is encouraged to try to correct the interference by one or more of the following measures:

-Reorient or relocate the receiving antenna.

· Increase the separation between the equipment and receiver.

· Connect the equipment into an outlet on a circuit different from that to which the receiver is connected.

· Consult the dealer or an experienced radio/TV technician for help.

Radiation Exposure Statement

This equipment complies with FCC radiation exposure limits set forth for an uncontrolled environment. This equipment should be installed and operated with minimum distance 20cm between the radiator and your body.