HAISEN

Sensor

HD06VCRH

1. Automatic On/off control with Daylight sensor.
2. Optional detection range, holdtime , daylight threshold, Stand-by period and Stand-by dimming level.
3. Remote control setting.
4. 5 year limited warranty.

RoHS COMPLIANT RED CE

On/off control | Detection area | Hold time | Daylight threshold | Stand-by period | Stand-by dimming level | Remote control setting | 10-15M Highbay altitude

Technical data

Operating voltage	12VDC
Operating current	30mA±5%
Output	DIM 0-10V
Stand-by power	≤0.5W
Detection area	25%/50%/75%/100%
Hold time	5s/30s/1min/3min/5min/10min/20min/30min
Daylight threshold	2Lux/10Lux/30Lux/50Lux/80Lux/120Lux/Disable
Stand-by period	0s/10s/30s/1min/5min/10min/30min/+∞
Stand-by dimming level	10%/20%/30%/50%
Microwave frequency	5750-5824MHz
Microwave power	<0.3mW
Mounting height	15m/49.2ft (ceiling mounted)
Detection range	Max,ø14m/45.92ft (ceiling mounted)
Operating temperature	-20°C~+60°C
Motion detection	0.5~1.5m/s
IP rating	IP65
Warranty	5 years

Detection coverage

Typical installation height 15m
This figure indicates the maximum distance at the highest mounting height with 100% sensitivity.

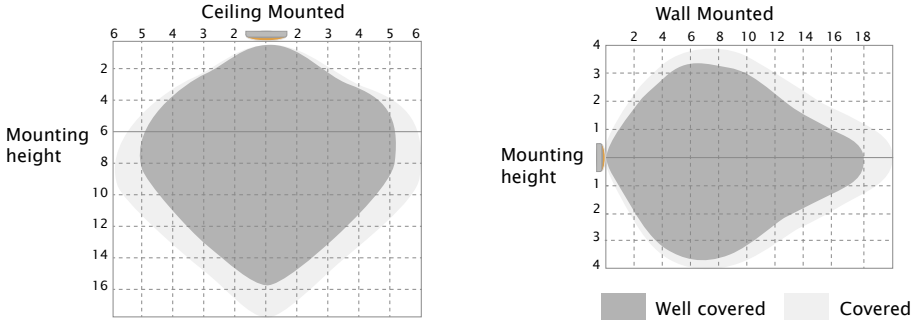

Dimensions (Unit: mm)

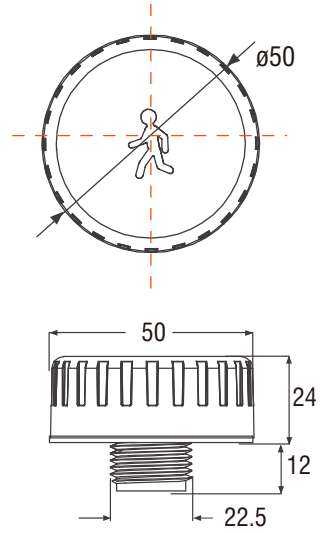

Wiring diagram

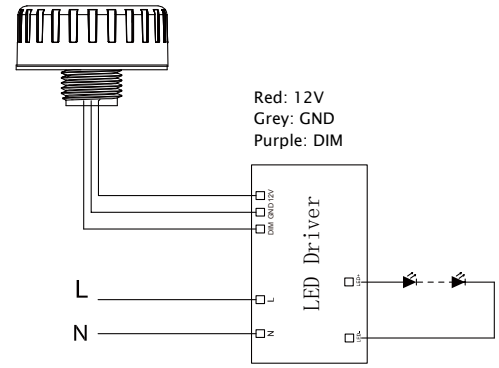

Specifications subject to change without notice.©All rights reserved.

Piug & Play

Icon

No icon

The cover with humanoid icon indicates there is built-in microwave module with sensor function; The cover without humanoid icon indicates there is no built-in module as well as sensor function.

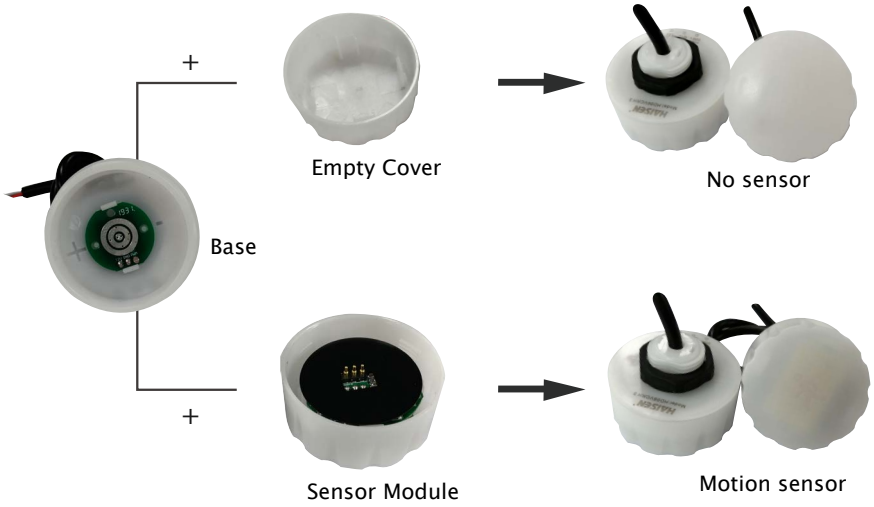

The bottom part will be always on the lighting fixtures; if the function is needed, the module will be placed inside; if no function needed, the module will be removed. It doesn't hurt the looking of the whole pack.

No sensor

Motion sensor

Daylight Priority

Dusk/Dawn sensor:
Dual-PD technology brings a fully automatic dusk/dawn sensor which can tell the difference between natural light and LED light, to ensure the light will be off when needed.

With Daylight priority function, HD06VCRH 3 is able to differentiate artificial light brightness from natural light after installed inside the fixture, and automatically turn off light when ambient brightness exceeds preset lux level.

Precondition of Daylight priority:
1. Standby period is +∞;
2. Standby dimming level is on 10%, 20% or 30%;
3. Daylight threshold is on 30Lux, 50Lux, 80Lux or 120Lux.

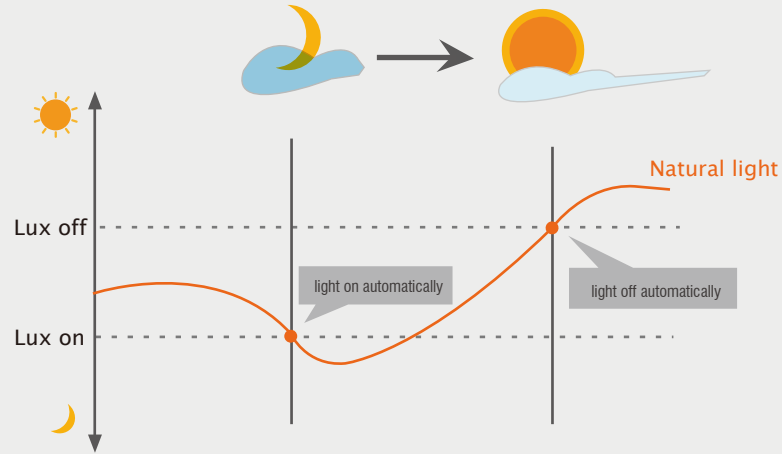

Application____Daylight priority

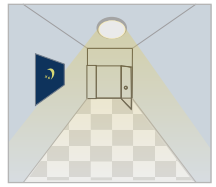

Light automatically on when ambient brightness is lower than preset lux level.

With insufficient ambient brightness, light dims to 100% when motion detected .

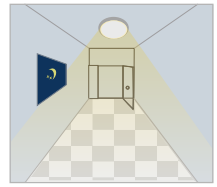

Light dims to standby level if no motion detected after holdtime.

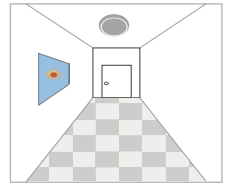

Light off when ambient lux level is higher than preset lux amount.

1. Automatically ON/OFF function:

Light on when detect movement and off after people leave at night. Applications: Corridor, Staircase.

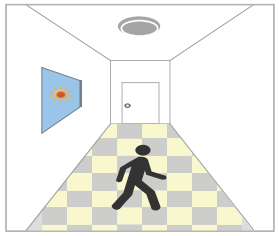

With sufficient daylight, even when motion detected, light remains OFF.

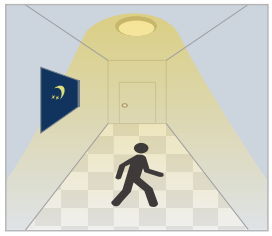

With insufficient daylight, when motion detected, light ON.

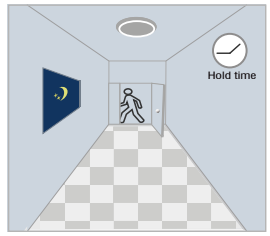

After the last detection and the present hold time elapsed, light OFF.

2. No daylight function

The daylight threshold is set to "Disable".

Light on when detect movement, After people leave, Light off after stand-by period.

Applications: Dim places such as Basement Parking, Underpass.

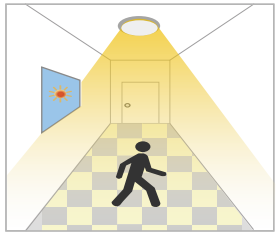

When motion is detected, the sensor will switch on the light to 100% brighteness.

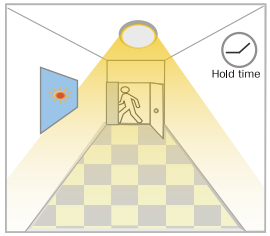

After people leave the detection area, light remains 100% brightness within hold time.

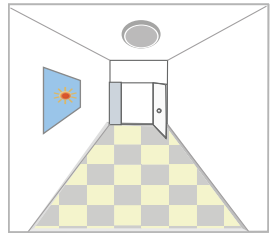

After the last detection and the present hold time elapsed, light OFF.

3. Function Demo - Dimmable control/Corridor function

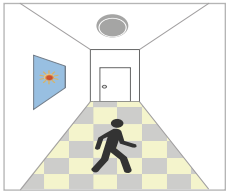

With sufficient daylight, even when motion detected, light remains OFF.

With insufficient daylight, when motion detected, light ON.

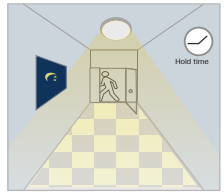

After last detection, the light will be dimmed down to the stand-by dimming level (10%,20%,30% or 50%) after holdtime.

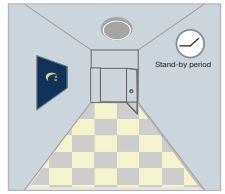

After the stand-by period, light OFF.

Installation Method

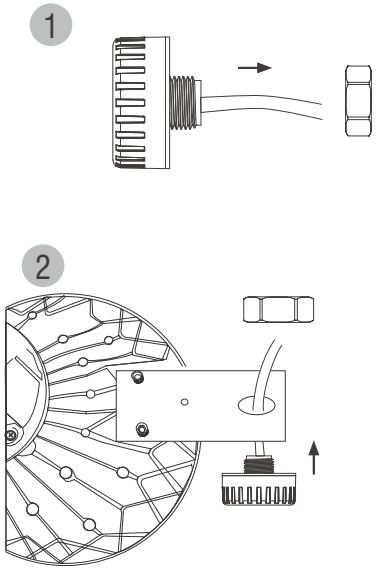

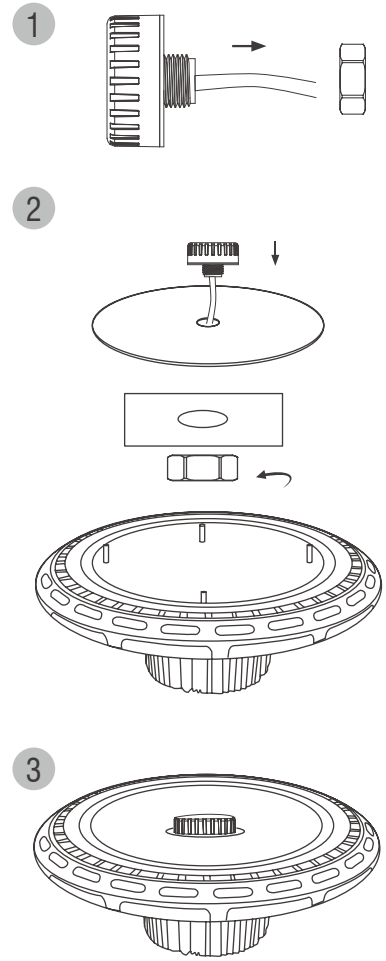

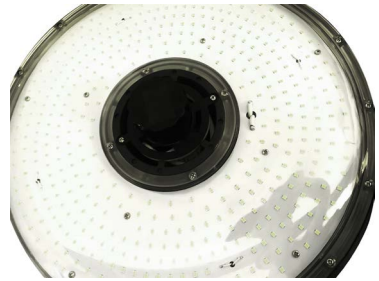

Attention

1. Please read the instructions carefully before using this product and keep it well for all users to read at any time.
2. The sensor should be installed by qualified electrician and ensure power is off before the installation.
3. We reserve the right to modify any incorrect text, image and necessary technical parameters.
4. Any unauthorized modification is forbidden, otherwise all guarantees will be immediately invalid.

Installation precautions

1. Microwave sensor can be installed in any lamp except the one with full metal shell.
2. The detected surface cannot be shielded by metal objects.
3. Make sure the microwave module is completely exposed outside.
4. The detection surface of the sensor module shall be installed facing the detection area.
5. Should be kept away from the driver to avoid interference generation and lamp flashing.
6. Wiring must be strictly in accordance with the wiring diagram to avoid short circuit.

Application Environment

1. Suitable for indoor installation to avoid false triggering due to external factors such as rain, wind or tree swing.
2. Shall not be installed in the place with all four metal shelters and small space (such as galvanized-iron roof).
3. Shall note be mounted installation, so as to avoid false trigger caused by the lamp itself shaking.
4. Shall not be installed next to large operating machines such as ventilator/ceiling fan to avoid false triggering caused by machine vibration.

User Notes

1.Microwave can penetrate walls or glass thinner than 20cm and attenuate if thicker than 20cm.
2. The driver voltage shall be stable and float within 10%.
3. Detection area will be affected by speed of motion, mounting height and movement volume.
4. Conduct test on sunny days without the lampshade which will affect the tested lux value.

HAISEN

HD05R Remote Control Applications

ON/OFF
Turn on or turn off the remote control.

WM/PIR
Change from the microwave sensor function to PIR sensor function, and the other around.

Scene
Press “Reset” button, products with DIP switch will be controlled by DIP switches; otherwise all the setting will be just initial, that is 100% detection range,hold time 5S, no stand-by time and daylight threshold disabled.

Start
Press the button before choosing the parameters.

Memory
Press the button after choosing all the parameters to save them.

Apply
Press the button to deliver the saved settings to the other sensors directly.

Hold time
The period of light keeping 100% brightness after moving objects leave the detection area.

Stand-by period
The period of light keeping low output before it gets completely off. When it's preset as --, the light always keep at low output even no movement in the detection area.

Power %
Press the button to change the output power from 0% to 100%, it changes 5% every press.

Test (2s)
The button “Test (2s)” is for testing purpose after commissioning.Pressing this button, the sensor goes to test mode (hold time is only 2s).

Increase or decrease the parameters.

Daylight Threshold
Definition of the ambient brightness; only when the ambient brightness is lower than the preset specific lux amount, the sensor will work; when it's preset as "disable", the sensor works everytime it detects motion regardless of the ambient lux level.

Stand-by dimming level
The definition of low output during the standby period.

Detection Rarea
The area in which movement will trigger the sensor, 100% detection area also means strong sensitivity.

Memory & Apply Mode

1. Press "ON/OFF button" to turn on the light or off.

2. To reset the parameters, Please follow the steps as below:
Step 1 - Press ON, to turn on the light if it was off at the start.
Step 2 - Press "Start" to the well-setting sensor.
Step 3 - Press the button of Detection range, Hold time, Stand-by dimming level, Stand-by period and Daylight threshold one after the other in sequence (Press "+/-" to set parameters).
Step 5 - Press “Memory” to memorize the settings.

Note: The interval of each parameter setting shall be controlled within 30s.

3. To programme other lights in the array that have similar sensors to the same programme.
Step 1 - Press "ON" to the second sensor
Step 2 - Press "Apply"

Isolated Setting Mode

1. Press "ON/OFF button" to turn on the light or off. Press "Scene", the remote will activate settings that were saved last or remain at the factory default settings.

2. To reset the parameters, Please follow the steps as below:
Step 1 - Press ON, to turn on the light if it was off at the start.
Step 2- Press any button of "Scene", Test" and "Apply" to begin the sensor detection mode.
Step 3 - Press the button of Detection range, Hold time, Stand-by dimming level, Stand-by period and Daylight threshold one after the other in sequence.

Notes:
1. Settings will be saved automatically and remain until you press reset again.
2. Light will flicker when setting each parameter.
3. The icon will flash when setting the corresponding parameter.

FCC Statement

This device complies with part 15 of the FCC rules. Operation is subject to the following two conditions: (1) this device may not cause harmful interference, and (2) this device must accept any interference received, including interference that may cause undesired operation.

Changes or modifications not expressly approved by the party responsible for compliance could void the user's authority to operate the equipment.

NOTE: This equipment has been tested and found to comply with the limits for a Class B digital device, pursuant to part 15 of the FCC Rules. These limits are designed to provide reasonable protection against harmful interference in a residential installation. This equipment generates uses and can radiate radio frequency energy and, if not inst alled and used in accordance with the instructions, may cause harmful interference to radio communications. However, there is no guarantee that interference will not occur in a particular installation. If this equipment does cause harmful interference to radio or television reception, which can be determined by turning the equipment off and on, the user is encouraged to try to correct the interference by one or more of the following measures:

- Reorient or relocate the receiving antenna.
- Increase the sep aration between the equipment and receiver.
- Connect the equipment into an outlet on a circuit different from that to which the receiver is connected.
- Consult the dealer or an experienced radio/TV technician for help.

The device has been evaluated to meet general RF exposure requirement. The device can be used in portable exposure condition without restriction.