F3

APPLE

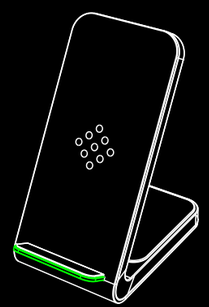

3-in-1 wireless charging pad

USER MANUAL

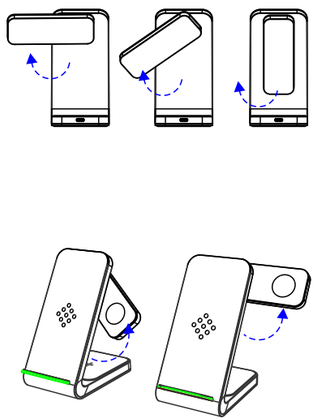

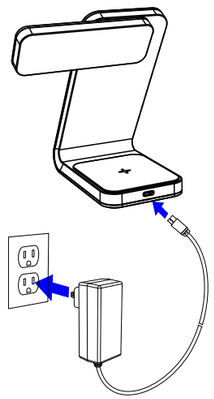

Only use certified 18W 9V/2A adapter

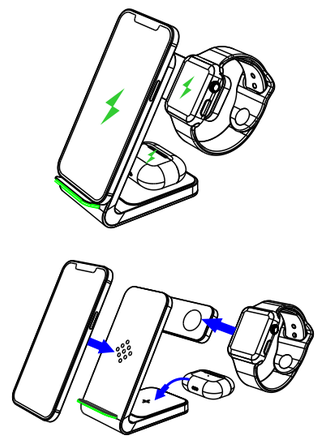

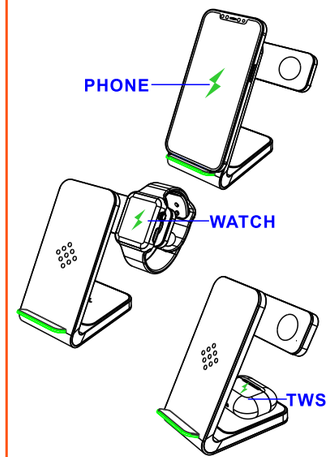

IMPORTANT SAFETY INSTRUCTIONS!

Before Using the unit, please read the user manual carefully

- Do not store device in high-temperature environment, including heat caused by intense sunlight or other forms of heat. Do not place device in fire or other excessively hot environments. Exposure to fire or temperature above 212- F (100- C) may cause explosion.
- Do not use the wireless charger in excess of its output rating. Overloading outputs above rating may result in a risk of fire or injury to persons.
- Do not expose the wireless charger to rain or snow.
- Do not modify, repair or disassemble the unity, if so, please contact the manufacturer.
- Switch off the wireless charger when not in use. The wireless charger will automatically

F3

3-in-1 wireless charging pad

F3

Android

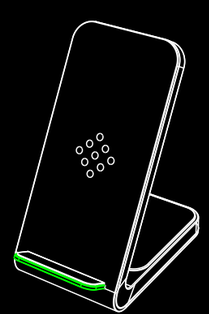

3-in-1 wireless charging pad

USER MANUAL

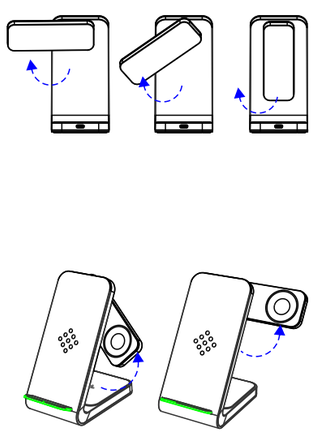

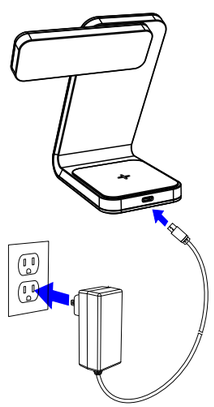

Only use certified 18W 9V/2A adapter

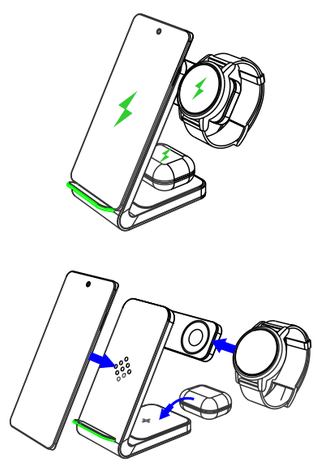

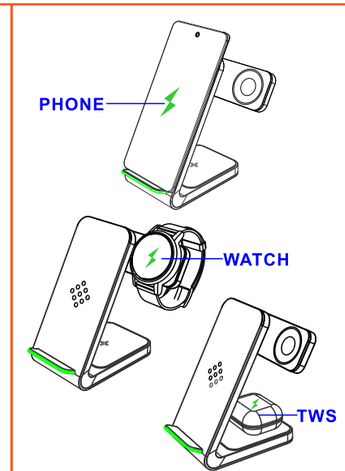

IMPORTANT SAFETY INSTRUCTIONS!

Before Using the unit, please read the user manual carefully

- Do not store device in high-temperature environment, including heat caused by intense sunlight or other forms of heat. Do not place device in fire or other excessively hot environments. Exposure to fire or temperature above 212- F (100- C) may cause explosion.
- Do not use the wireless charger in excess of its output rating. Overloading outputs above rating may result in a risk of fire or injury to persons.
- Do not expose the wireless charger to rain or snow.
- Do not modify, repair or disassemble the unity, if so, please contact the manufacturer.
- Switch off the wireless charger when not in use. The wireless charger will automatically

F3

3-in-1 wireless charging pad

FCC Warning:

This device complies with Part 15 of the FCC rules. Operation is subject to the following two conditions: (1) this device may not cause harmful interference, and (2) this device must accept any interference received, including interference that may cause undesired operation.

The manufacturer is not responsible for any radio or TV interference caused by unauthorized modifications or change to this equipment. Such modifications or change could void the user's authority to operate the equipment.

This equipment has been tested and found to comply with the limits for a Class B digital device, pursuant to part 15 of the FCC Rules. These limits are designed to provide reasonable protection against harmful interference in a residential installation. This equipment generates, uses and can radiate radio frequency energy and, if not installed and used in accordance with the instructions, may cause harmful interference to radio communications. However, there is no guarantee that interference will not occur in a particular installation. If this equipment does cause harmful interference to radio or television reception, which can be determined by turning the equipment off and on, the user is encouraged to try to correct the interference by one or more of the following measures:

-- Reorient or relocate the receiving antenna.

-- Increase the separation between the equipment and receiver.

-- Connect the equipment into an outlet on a circuit different from that to which the receiver is connected.

-- Consult the dealer or an experienced radio/TV technician for help.

The device has been evaluated to meet general RF exposure requirement.