K1

3-in-1 Wireless Charging Station

USER MANUAL

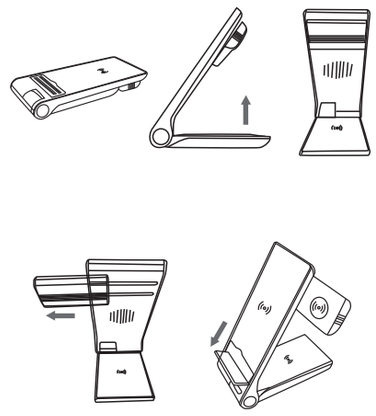

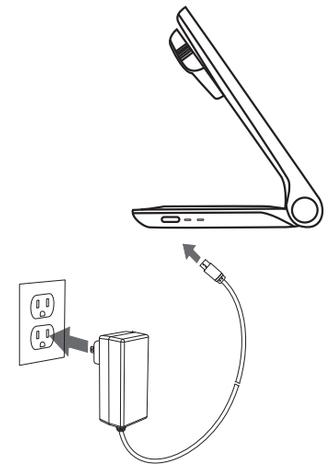

Only use certified 18W 9V/2A adapter

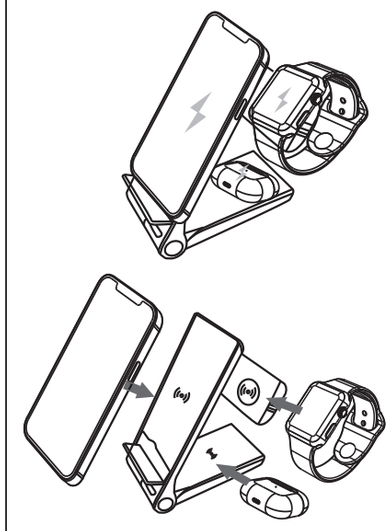

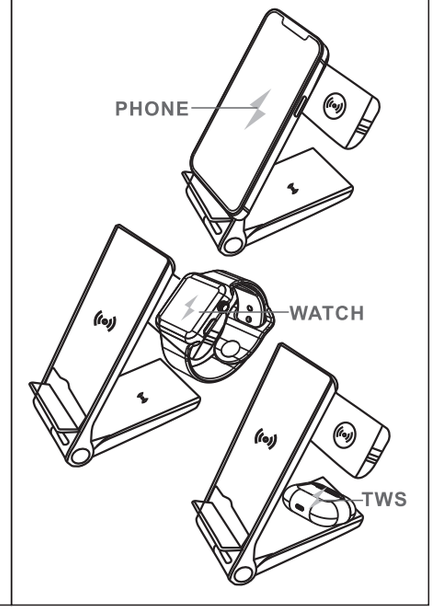

K1

3-in-1 Wireless Charging Station

Product Description

This product is a set of mobile phone, earphone, watch in one of the three in one wireless charger, It uses a folding position to charge the earphones, while the watch can be charged by sliding cover and push-pull mode, It also supports horizontal and vertical charging. The design is small and beautiful, especially suitable for home office use.

Product Usage

One end of the TPYE-C data line is inserted into the input port of the product, and the other end is connected to the charging head, so that the product can be used normally.

Function Introduction

1. Standby: power on the product, double green lights flash out, in standby state

2. Earphone charging: Open the folded lower shell and lay it flat,place the earphone that supports wireless charging in the center of the charging sign,the green light on the product will be turned off after 20 seconds and then the earphone charging indicator will be on until it is fully charged.

3. Watch charging: Slide right out of the top cover, then place the watch that supports wireless charging in the center of the charging sign mark automatically adsorption, watch shows charging.

4. Mobile phone charging: Open the mobile phone bracket, the mobile phone that supports wireless charging can be placed horizontally or vertically on the bracket, the green light under the product will be on for 20 seconds, and the mobile phone will display charging instructions until it is fully charged.

Electrical Parameters

Input voltage	9V/2A, 12V/2A
Output power	15W,5W,3W
Interface	Type - c
Support QC and PD protocol	

Announcements

1. This product need uses the recommended adapter
2. Avoid violent impact and falling.
3. Do not place it in direct sunlight, high temperature and damp place.
4. Avoid using liquid or hard cloth with corrosive chemical composition to wipe the surface of the product.

90*60mm

FCC WARNING

This device complies with part 15 of the FCC Rules. Operation is subject to the following two conditions: (1) this device may not cause harmful interference, and (2) this device must accept any interference received, including interference that may cause undesired operation.

Any changes or modifications not expressly approved by the party responsible for compliance could void the user's authority to operate the equipment.

NOTE: This equipment has been tested and found to comply with the limits for a Class B digital device, pursuant to Part 15 of the FCC Rules. These limits are designed to provide reasonable protection against harmful interference in a residential installation. This equipment generates, uses and can radiate radio frequency energy and, if not installed and used in accordance with the instructions, may cause harmful interference to radio communications. However, there is no guarantee that interference will not occur in a particular installation.

If this equipment does cause harmful interference to radio or television reception, which can be determined by turning the equipment off and on, the user is encouraged to try to correct the interference by one or more of the following measures:

-- Reorient or relocate the receiving antenna.

-- Increase the separation between the equipment and receiver.

-- Connect the equipment into an outlet on a circuit different from that to which the receiver is connected.

-- Consult the dealer or an experienced radio/TV technician for help.

RF warning for WPT device:

The equipment complies with FCC radiation exposure limits set forth for an uncontrolled environment. During the operation of device a distance of 15cm surrounding the device and 20 cm above the top surface of the device must be respected.