WiFi Digital Microscope

Mode : CM2

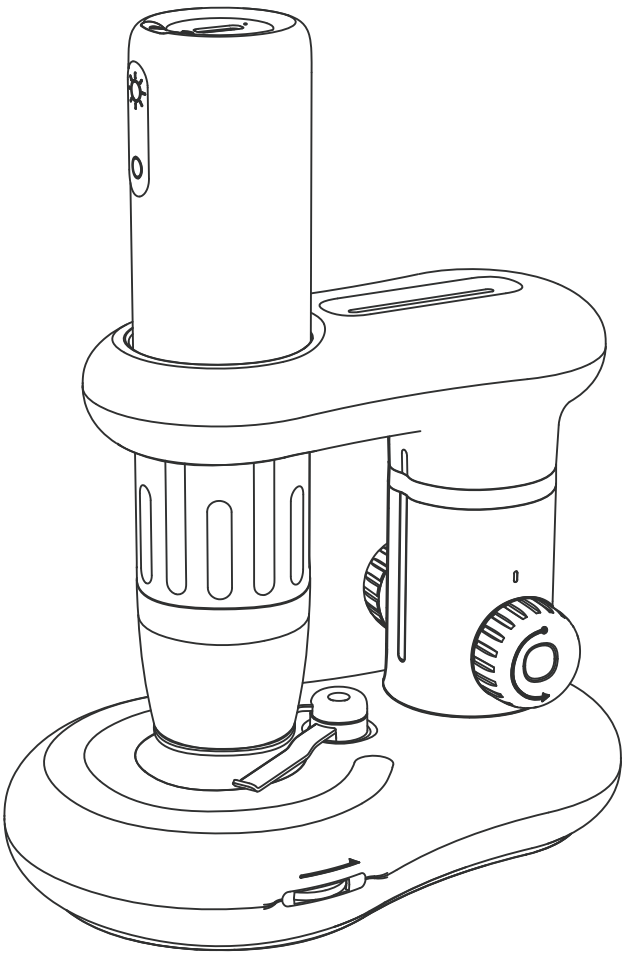

User Manual V1.0

Please read the instructions carefully and keep it for future reference.

Contents

Read me First 03

Installation Instructions 04

Packing list 04

Installation of microscope 04

Parts Description 05

Parts and functions 05

Battery installation 06

Detailed Operation 07

1. How to focus? 07

2. How to work with PC? 08

Software download 08

Operating steps 09

3. How to work with cell phone? 11

App download 11

Operating steps 12

Introduction of the APP 13

Usage Environment Description 14

Product Parameters 15

Read me First

- Please read this user manual carefully and keep it for future reference.
- Pay attention to protect the lens part. Close the lens lid after using to avoid entering dust or strange objects.
- The microscope can be used in hand or inserted as a desktop, with attention to avoid damage to the components.
- When placing items, place them directly below the center of the lens as much as possible. Avoid not seeing objects clearly and bringing about a bad experience.
- Please store the microscope in a cool and dry place and avoid direct sunlight.
- Please avoid storing the microscope in places where there is risk of falling, which may cause the internal lenses to deviate or damage other components, as well as other irreparable damage.

Installation Instructions

Packing list

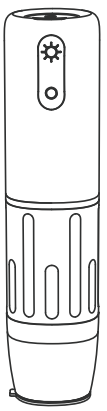

Microscope

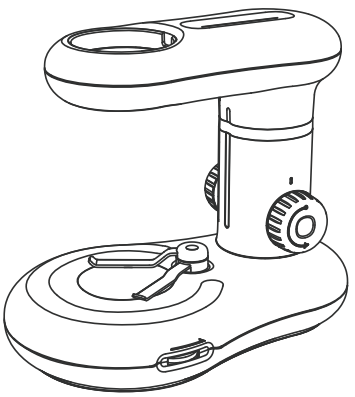

Base

Installation of microscope

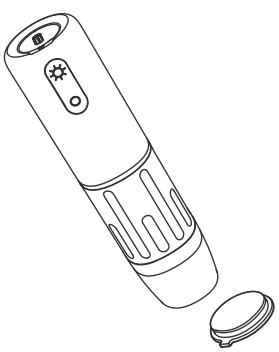

1. Take off the microscope lens cover.

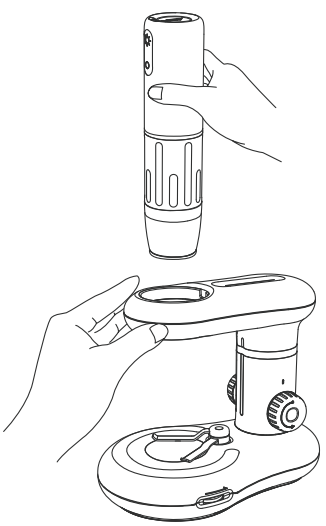

2. Hold the base with one hand and insert the microscope vertically into the installation hole.

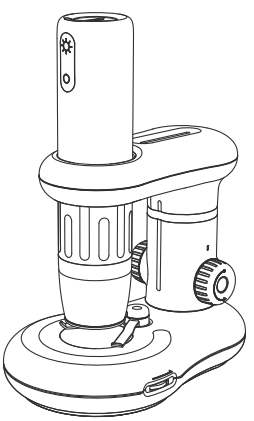

3. Complete (Note: Please adjust until the focus wheel is fully exposed)

Parts Description

Parts and functions

Note: When the device is abnormal, long press the "Full Light Bright Button" and "Full Light Dim Button" at the same time to forcibly shut down the device.

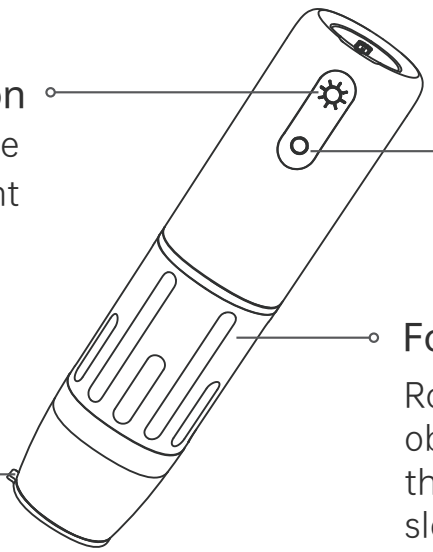

Full Light Bright Button
Bright and turn on the fill light

Full Light Dim Button
Dim and turn off the fill light.

Focus Wheel
Rotate the wheel to focus the observed object. Please keep the object distance fixed and slowly adjust the wheel until the picture is clear.

Lens Cap
Protect the lens

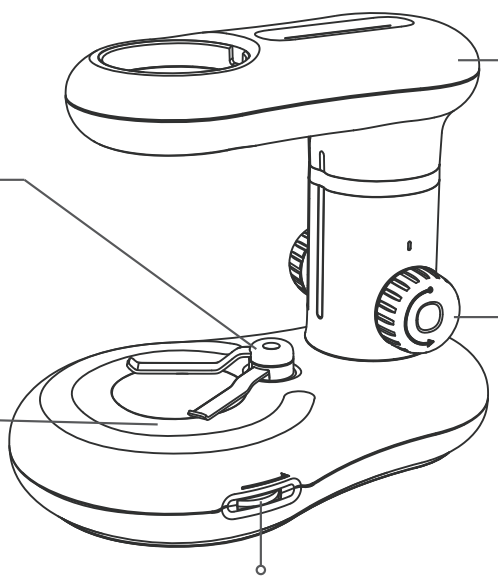

Microscope Base
Fixed Observation Device for Microscope Stand.

Specimen Fixation Clamp
A clamp for fixing specimens or observing targets.

Adjustable Knob.
Adjustable Movement of Microscope for Up and Down.

Observation Window
Render the bottom of the object for observation.

Base Light Adjustment Knob
Rotate the knob to adjust the brightness of the base light.

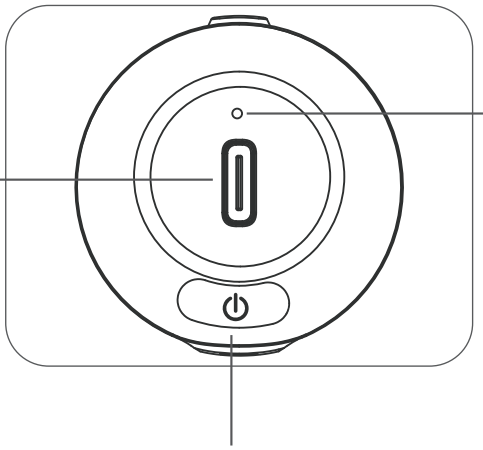

Type-C Interface

Connect type-c to charge or connect with computer.

Power Button

Long press it for 3 seconds to to turn on/off the microscope.

Charging Indicator light

① The indicator light is blue light flashes after power on, when connect to computer/WiFi, the indicator light is always blue;

②The indicator light is red after charging, when full, the light is off;

③When the battery is low, the blue light flashes for 30s and then turns off automatically.

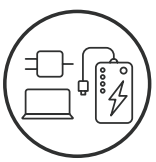

You can charge the microscope with your daily mobile charger, computer, or power bank.

Please do not charge it for more than 12 hours to avoid affecting the battery life.

Note: During the charging process, if the outer shell of the microscope has slight heating, it is a normal phenomenon, please use it with confidence.

⚠ Battery installation

Step 1. Pry open the battery cover of the base by buckling the battery cover recess

Step 2. Install the 7# 1.5V battery according to the direction indicated inside (please pay attention to distinguish the positive and negative poles when installing the battery, the non-rechargeable battery can not be charged)

Step 3. Close the battery cover.

Detailed Operation

* Before using the microscope, please make sure to hold it steady with your hands or place it on the desk for use.

1. How to focus?

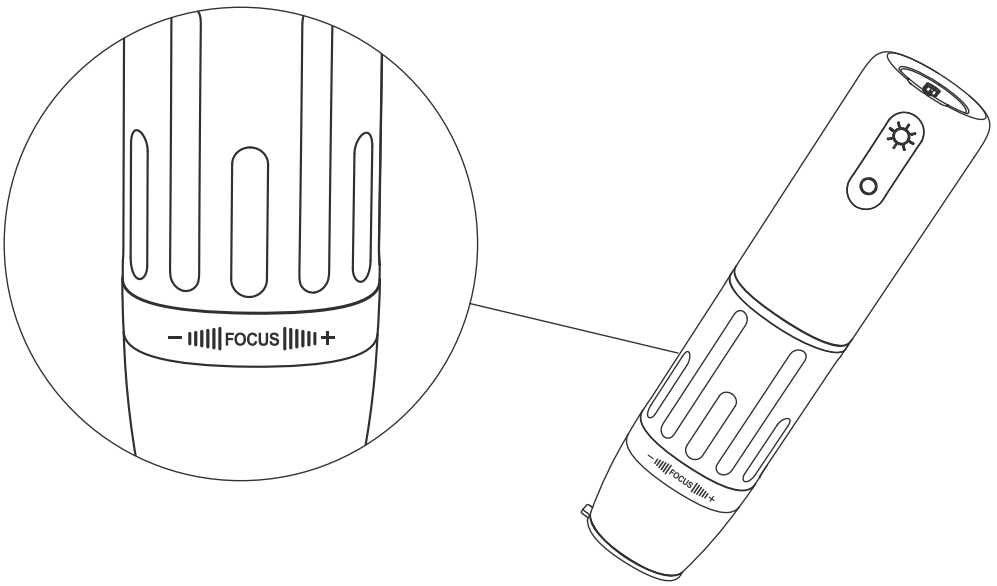

- Counter-Clockwise Rotation: multiple magnification
- Clockwise Rotation: multiple reduction

- (**Note:** In case of any other problems, the reset hole will restore the factory setting. At the same distance, the rotating zoom cylinder has two magnification. To adjust more multiples, it can be adjusted up and down through the microscope base bracket.)

2. How to work with PC?

- ## Software download

Note: The following 3 methods can be downloaded, please choose the appropriate version according to your computer system.

①For Windows 7, Windows 8.1, Windows 10, Windows 11 and Mac , download the software from the website:
http://soft.hvscam.com

简体中文 | English

HiViewSetup 1.4 for mac
Support: S4 X4 W01 DM3 DM4 DM7 DM8 DM9 MS1 MS2 MS3 MS4 MS5
Click to read the instructions

HiViewSetup 1.4 for windows
Support: S4 X4 W01 DM3 DM4 DM7 DM8 DM9 MS1 MS2 MS3 MS4 MS5
Click to read the instructions

Amcap v3.0.9 for windows
Support: W01 DM1 DM2 DM3 DM4 DM7 DM8 DM9 MS1 MS2 MS3 MS4 MS5
Click to read the instructions

②For Windows 8 or higher system, search "hiView" (" ")in the Microsoft Store to download it and you can also be viewed in Camera(" ").

③For Mac OS X 12 or higher system, search "hiView" in the APP Store to download it and you can also be viewed in Photo Booth(" ") .

• Operating steps

Step 1: Connect CM2 microscope to computer through the Type-C cable.

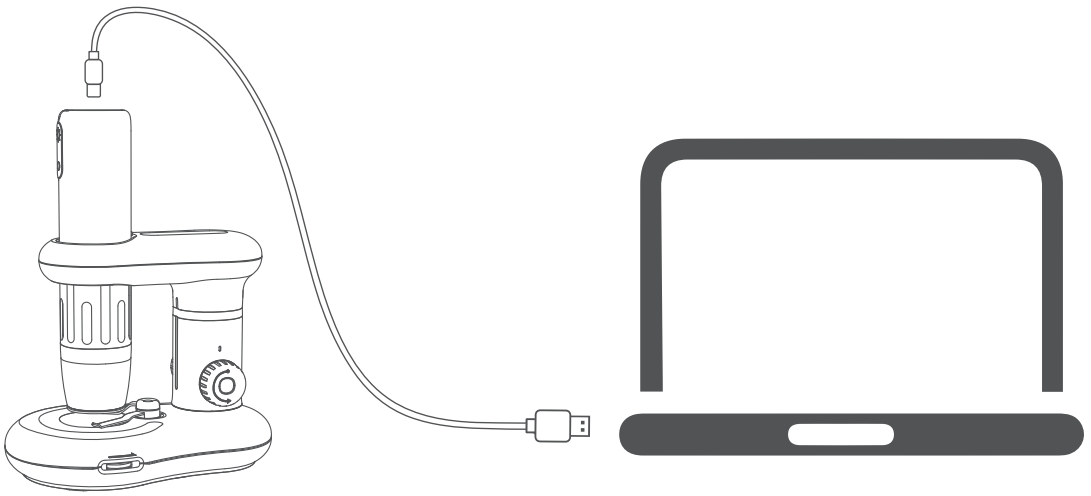

Step 2: Long press Power Button for 3 seconds to turn on the microscope. (Note: When the indicator light is flashing, the microscope is powered on.)

Step 3: Open the software, you can see the image and take pictures and videos through the software.

①HiView
(Window System)

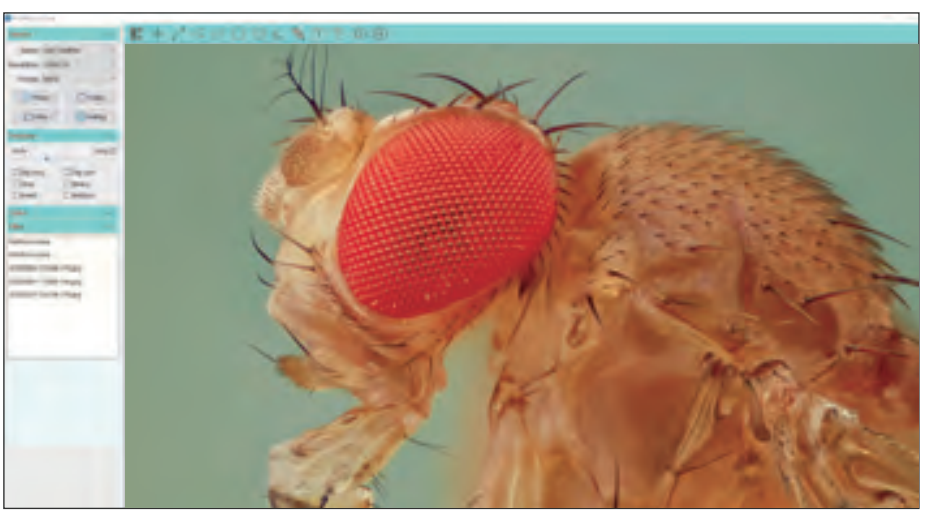

②Windows Camera

③Photo Booth
(Mac)

3. How to work with cell phone?

• App download

Use mobile phone/tablet browser to scan the QR code, click download and install (**Note:** For iOS system, search for "DLscope" in the App Store and download)

(iOS / Android download QR code)

(iOS / Android icon)

• Operating steps

Step1: Turn on the microscope

Long press power button for 3 seconds to to turn on the microscope.(Note: When the indicator light is blue flashing, WiFi is ready to be connected.)

Step 2: Connect microscope to cell phone.

①Connect microscope to Android / IOS

②open DLscope, click "+" in the upper right corner to select the device "CM2", select the WiFi name corresponding to the product: "Cam-CM2-xxxx" (no password) . After connected, return to the APP and click to enter.

③When connected, the indicator light is blue and you can use "DLscope" .

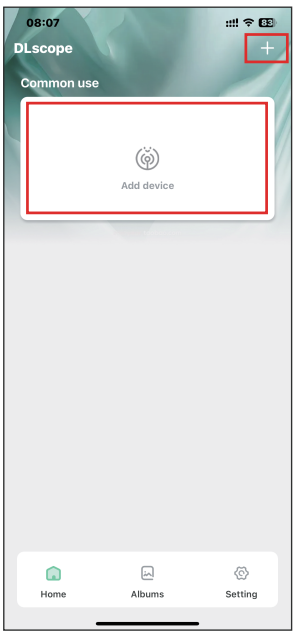

①

②

③

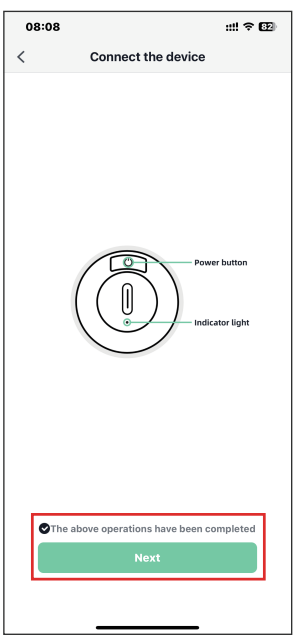

④

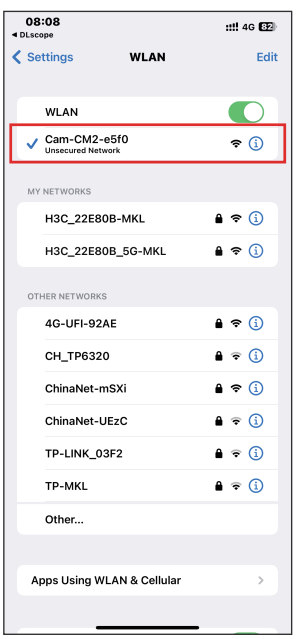

⑤

- ## Introduction of the APP

(* The picture only for reference because different mobile phone model and version)

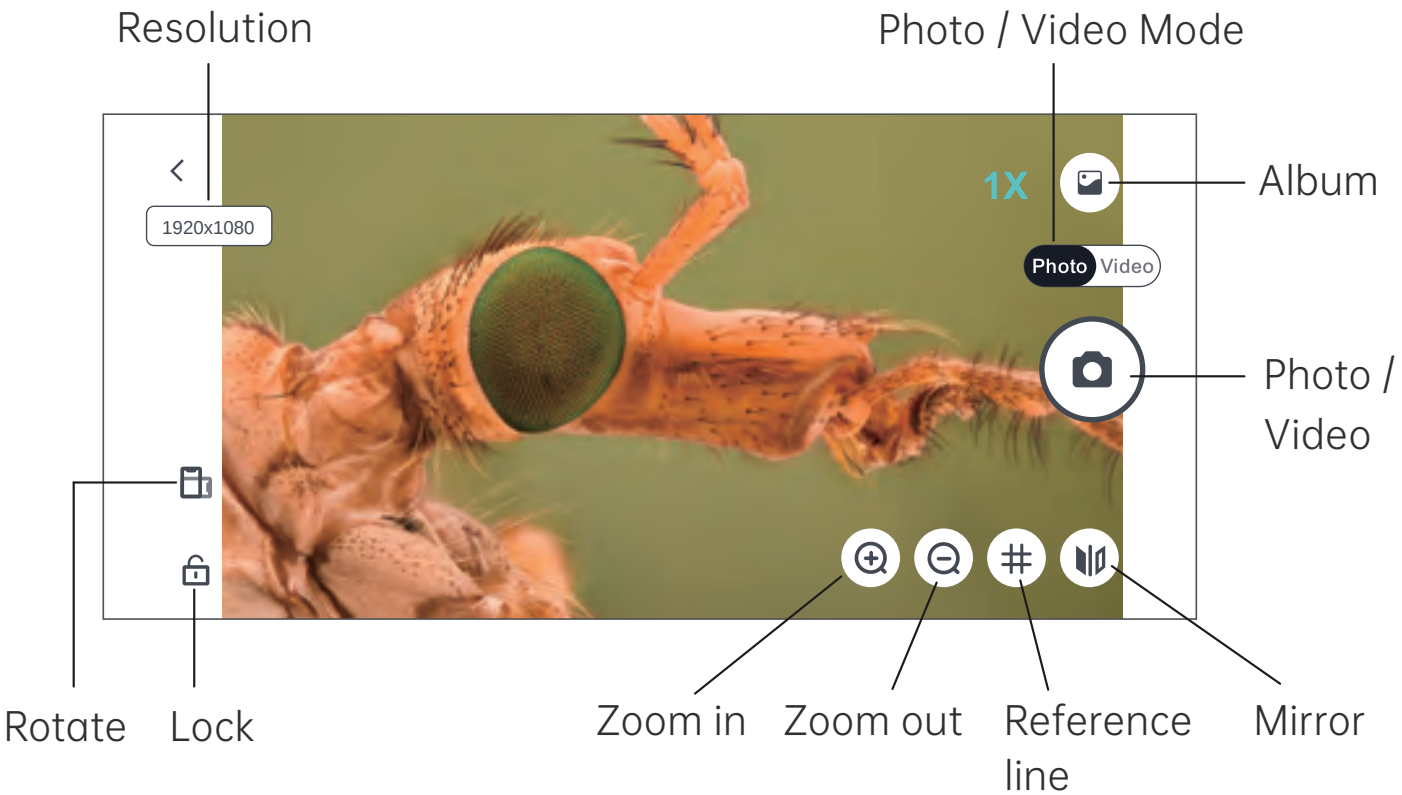

Resolution: click to switch photo / video resolution .
Zoom in: click to enlarge the screen . (used when the screen is too small)
Zoom out: click to zoom out the screen . (used when the screen is to big, default is minimum each time you open it)
Reference line: turn on or off the reference line
Mirror: click to switch to mirror mode .
Lock: click to lock the screen .
Rotate: click to rotate the screen .
Album: click to view photos or videos that have been taken .
Photo: taking pictures / video of the current observed object.
Photo/Video Mode: You can switch between picture / video mode.

Usage Environment Description

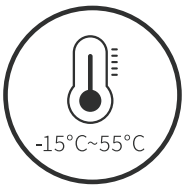

Please use in an environment of -15℃~55℃.

Avoid wetting the microscope with water, drinks, and corrosive liquid.

Avoid keeping the microscope close to heat sources, open flames, and flammable or explosive gases (or liquids).

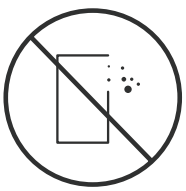

Avoid dust entering the lens and interior of the microscope.

Avoid impacts and strong vibration on the microscope.

(**Note:** The capacity of the battery may be reduced to some extent in low temperature conditions.)

Product Parameters

Item	Parameters
Product Name	CM2
Magnification	50X-1000X
Lens Structure	5G+IR
Lens Angle of View	16°
Light Source	8 LEDs (adjustable brightness)
Image Distance	3mm to Infinity
Sensor size	1/4"
Video Format	MP4
Picture Format	JPG
Photo/Video Resolution	640x360, 1280x720, 1920x1080
Interface and Signal Transmission Mode	Type-C
APP Working Environment	Android 8.0 and above, iOS 10.0 and above
PC Operating System	Windows 7, Winows 8.1, Winows10, Mac OS x 12 or higher
Noise-signal Ratio	41.4db
Sensitivity	18000mV/lux-sec
Operating Current	~300mA

This device complies with part 15 of the FCC Rules. Operation is subject to the following two conditions: (1) this device may not cause harmful interference, and

(2) This device must accept any interference received, including interference that may cause undesired operation.

Changes or modifications not expressly approved by the party responsible for compliance could void the user's authority to operate the equipment. This equipment has been tested and found to comply with the limits for a Class B digital device, pursuant to Part 15 of the FCC Rules. These limits are designed to provide reasonable protection against harmful interference in a residential installation. This equipment generates uses and can radiate radio frequency energy and, if not installed and used in accordance with the instructions, may cause harmful interference to radio communications. However, there is no guarantee that interference will not occur in a particular installation. If this equipment does cause harmful interference to radio or television reception, which can be determined by turning the equipment off and on, the user is encouraged to try to correct the interference by one or more of the following measures:

-- Reorient or relocate the receiving antenna.

-- Increase the separation between the equipment and receiver.

-- Connect the equipment into an outlet on a circuit different from that to which the receiver is connected.

-- Consult the dealer or an experienced radio/TV technician for help.

The device has been evaluated to meet general RF exposure requirement.