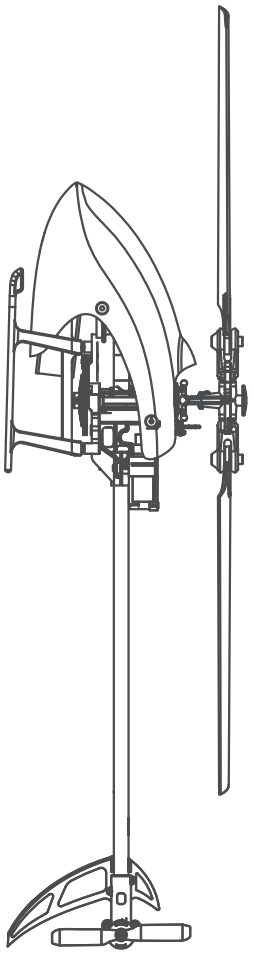

FCC WARNING
This device complies with part 15 of the FCC Rules. Operation is subject to the following two conditions: (1) this device may not cause harmful interference, and (2) this device must accept any interference received, including interference that may cause undesired operation.
Any changes or modifications not expressly approved by the party responsible for compliance could void the user's authority to operate the equipment.
NOTE: This equipment has been tested and found to comply with the limits for a Class B digital device, pursuant to Part 15 of the FCC Rules. These limits are designed to provide reasonable protection against harmful interference in a residential installation. This equipment generates, uses and can radiate radio frequency energy and, if not installed and used in accordance with the instructions, may cause harmful interference to radio communications. However, there is no guarantee that interference will not occur in a particular installation.
If this equipment does cause harmful interference to radio or television reception, which can be determined by turning the equipment off and on, the user is encouraged to try to correct the interference by one or more of the following measures:
-- Reorient or relocate the receiving antenna.
-- Increase the separation between the equipment and receiver.
-- Connect the equipment into an outlet on a circuit different from that to which the receiver is connected.
-- Consult the dealer or an experienced radio/TV technician for help. The device has been evaluated to meet general RF exposure statement.
The device can be used in portable exposure condition without restriction
Warning: Changes or modifications to this unit not expressly approved by the part responsible for compliance could void the user' s authority to operate the equipment

4CH Helis

USER MANUAL

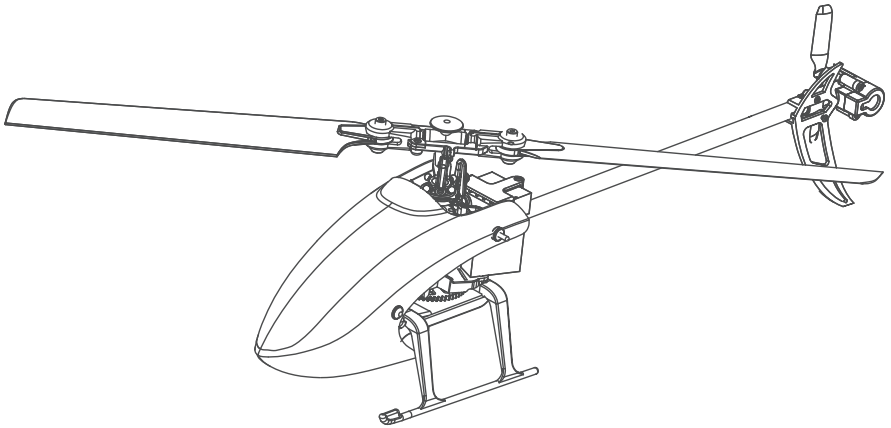

4-channel aileronless single-rotor helicopter,
adopting 2.4GHZ channel communication protocol,
barometer for fixed height, 6-axis gyroscope for stabilization,
it is very suitable for beginners to fly.

ENGLISH

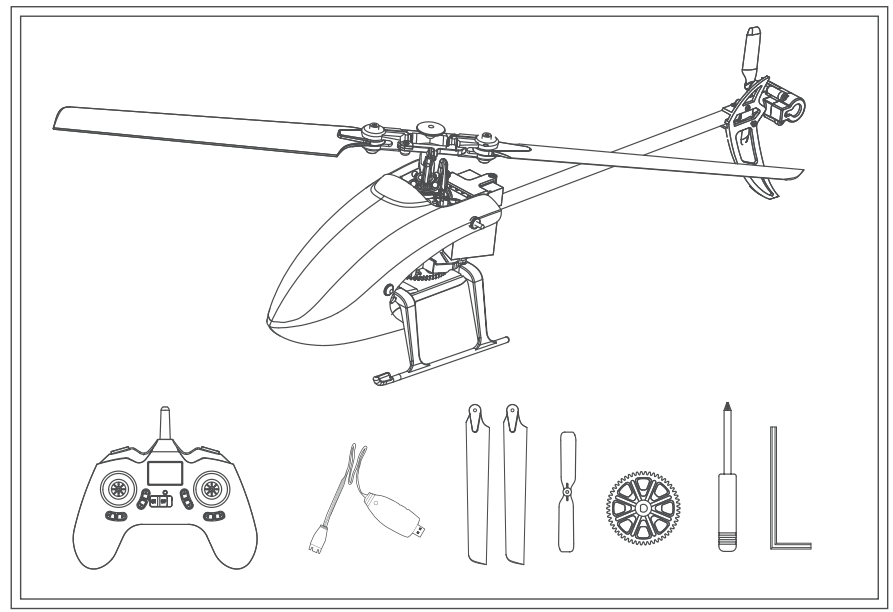

ITEM LIST

NO.	PARTS	QUANTITY
1	PVC packaging	1
2	User Manual	1
3	Helicopter	1
4	Transmitter	1
5	Charger	1
6	Battery 7.4v 700mah 20C	1
7	Cross Screwdriver/Hex Wrench	1
8	Main Propellerl Tail Propeller	1Set

NOTICE

All instructions, warranties and other collateral documents are subject to change at the sole discretion of our company. For up-to-date product literature, please visit

WARNING

Read the ENTIRE user manual to become familiar with the features of the product before operating. Failure to operate the product correctly can result in damage to the product, personal property and cause serious injury. This is a sophisticated hobby product. It must be operated with caution and common sense and requires some basicmechanical ability. Failure to operate this product in a safe and responsible manner could result in injury or damage to the product or other properties. This product is not intended for use by children without direct adult supervision. This manual contains instructions for safety, operation and maintenance. It is essential to read and follow all the instructions and warnings in the manual, prior to assembly, setup oruse, in order to operate correctly and avoid damage or serious injury.

ADDITIONALSAFETY PRECAUTIONS AND WARNINGS

1. Age Recommendation: Not for children under 14 years.This is not a toy.
2. Always operate your model in open spaces away from full-size vehicles, traffic and people.
3. Follow the operation notice,warning and any support equipment(charger, battery, etc) carefully.
4. Keep away from any chemicals; keep children away from any small parts and electrical equipment.
5. Always keep away from water,especially for this product don't have waterproof function; It will be damaged by moisture.
6. Neverplace any portion of the model in your mouth as it could cause serious injury or even death.
7. Never operate your model with low voltage transmitter batteries.

INTRODUCTION

This is a super classic helicopter with excellent flight performance. Flybarless desig decrease resistance of rotor head.Quote to aerodynamics, the blades can supply strong power and keep stability. Using new type gyro, compatible with 3D and 6G modes. You can make a variety of stunts by 3D mode;6G mode is suitable for beginners especially.

After flying this mini helicopter, you will find other mini helicopters which you have flying are eclipsed,This is a incomparable and popularization helicopter. Beginners will find it is easy to fly, masters will find it is interesting. It is worth to be possessed.

This manual with detailed instruction ,will help you learn more about the product.
Please read it before your flying.

TABLE OF CONTENTS

Item List 1
Notice 2
Warning 2
Additional Safety Precautions and Warnings 2
Introduction 2
Table of Contents 3
Helicopter Parameters 4
Warning and the Guide of Battery Usage 4
Battery Charging 4
Notice Before Flight 5
Pair the Transmitter with the Receiver 5
Throttle Curve and Pitch Curve Setting Reference Table 6
Initial Flight 7
Recaiver Interace Diagram 7
About Remote Controller 8
Flight Battery Installment 9
Troubleshooting 9
Exploded View 11
Accessory List 12
Accessories List 12

HELICOPTER PARAMETERS

Length	345 MM
Height	108 MM
Weight	131g
Length of Main Propeller	320MM
Landing gear width	62MM
Battery Specification	7.4v 700mah 20C
Flight Time	15-20 Min
Main Brushless Motor	050
Brushless Tail Motor	8520

WARNING AND THE GUIDE OF BATTERY USAGE

To ensure safety, please use the icluded standard charger

WARNING: It is recommended to use the original power supply charger whencharging, otherwise property damage and injury will occur.

Notice: When it is lower than 7.4V, the lithium battery may be damaged, or itmay no longer be charged. When the battery voltage is lower than 7.4V when the aircraft is flying, the power of the aircraft drops significantly.Please immediately land and charge the battery in time.

BATTERY CHARGING

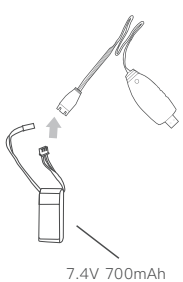

1. The user should connect to the power adapter with a USB port or connect to the USB port of computer.
2. Connect the USB cable to the power adapter, at the same time the USB charger red light flashes.
3. The partial voltage charging head of the battery is connected with the USB cable. At this time, the USB charger's red light always on and charging is in progress.
4. When the USB charger red light is off, charging is completed.

Warning

1. To ensure safety, please charge under the supervision of someone.
2. Children cannot charge alone, they should charge with the assistance of an adult.
3. Please use the original standard charger of this product for charging. The charger of unknown origin may cause a fre and explosion accident.
4. It is recommended that users prepare their own 2A current adapter,which will shorten the charging time.

NOTICE BEFORE FLIGHT:

1. Check if the the transmitter power supply is sufficient, whether the helicopter power supply is sufficient
2. Please make sure the transmitter throttle stick is at the bottom when turning on the transmitter
3. Confirm if the transmitter and the helicopter are in the same frequency, re-check the code if it is abnormal
4. Firstly turn on the transmitter when powering on, then connect the battery to the receiver for binding. Firstly unplug the cable between the battery and the receiver when powering off, and then turn off the transmitter.
5. Find a suitable place for safe and happy flying. Keep away from crowds, cars, high-voltage towers, ponds, etc.

BINDING BETWEEN THE TRANSMITTER AND RECEIVER

1. Turn on the remote control, the remote control emits a long beep, and the power indicator of the remote control flashes
2. Power on the aircraft, the receiver indicator flashes, move the throttle stick to the uppermost position and then to the lowermost position, the remote control emits a beep, and the remote control light is solid on and the receiver board indicator light is solid on, the binding is completed.
3. If the binding is unsuccessful, please disconnect the power of the aircraft, turn off the transmitter, repeat the above steps to bind again.

AIRCRAFT HORIZONTAL CALIBRATION

1. When the aircraft appears obvious orbit deviation, the flight attitude can be corrected by horizontal calibration.

2. Hit the left and right joystick at the same time to the bottom left corner for 1–2 seconds as shown, At this time, the aircraft indicator light enters quick flashes. The aircraft enters the horizontal calibration, waiting for the aircraft indicator lights return to long light, the calibration is completed.

Special note: calibration needs to find a relatively flat field, as far as possible to ensure that the aircraft and the ground at the same level. After the aircraft enters the calibration procedure, it shall be ensured that the aircraft is still, and the aircraft cannot be moved until the calibration is completed.

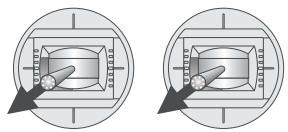

HOVER SETTING

The aircraft you purchased has been set before leaving the factory. If the aircraft cannot enter the hover well, you can set it through the following steps.

1. Power up the plane, match the frequency and take off.
2. In flight, long press the hover setting button to enter the setting. The remote control makes a dripping sound and the indicator light starts to flash.
3. According to the yaw direction of the aircraft, push the Trim Button of the correspondingchannel in the opposite direction until the aircraft hovers smoothly.
4. Land the aircraft and press the hover setting button to exit the setting. At this time, the remote control will emit drops and the indicator light will return to always on.
5. Restart the plane and reset the power of the remote, matching again for fly.

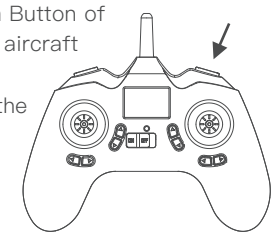

INITIAL FLIGHT

If you are not familiar with the control of the Helis, take a few minutes to get familiar with them and then try your first flight.

Throttle

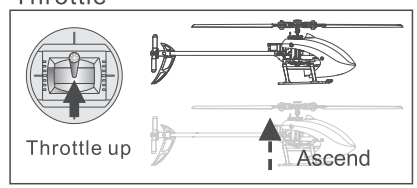

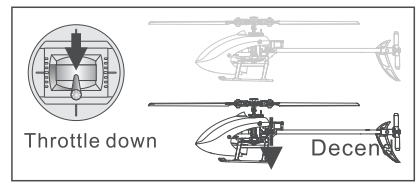

Rudder

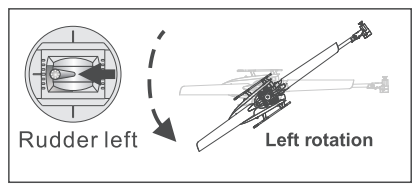

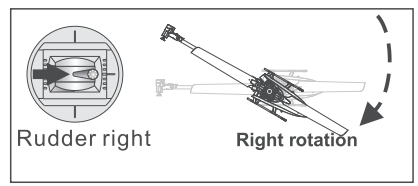

Elevator

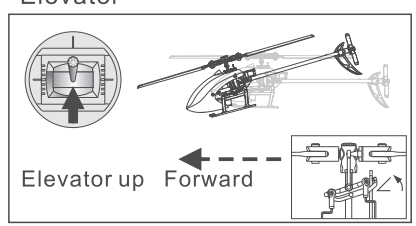

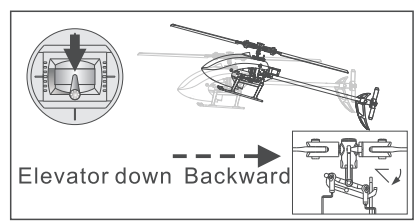

Aileron

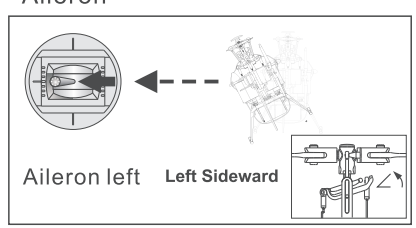

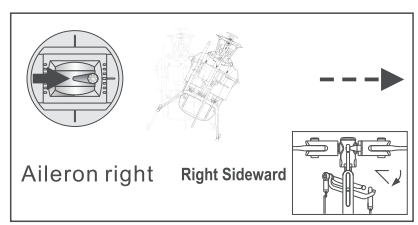

START YOUR FIRST FLIGHT

1. The binding of success of the flight level is placed on the ground, to ensure that the aircraft tail to you, head in front.
2. As the picture showa,Snai tme jog sticker corner to start/stop motors.

Note: After the aircraft landed on the ground, keep the throttle rocker in the lowest position for 2–3 seconds,then release the rocker after the airplane motor stops completely.

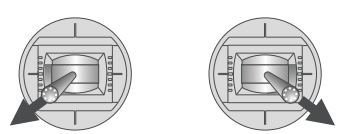

ABOUT REMOTE CONTROLLER

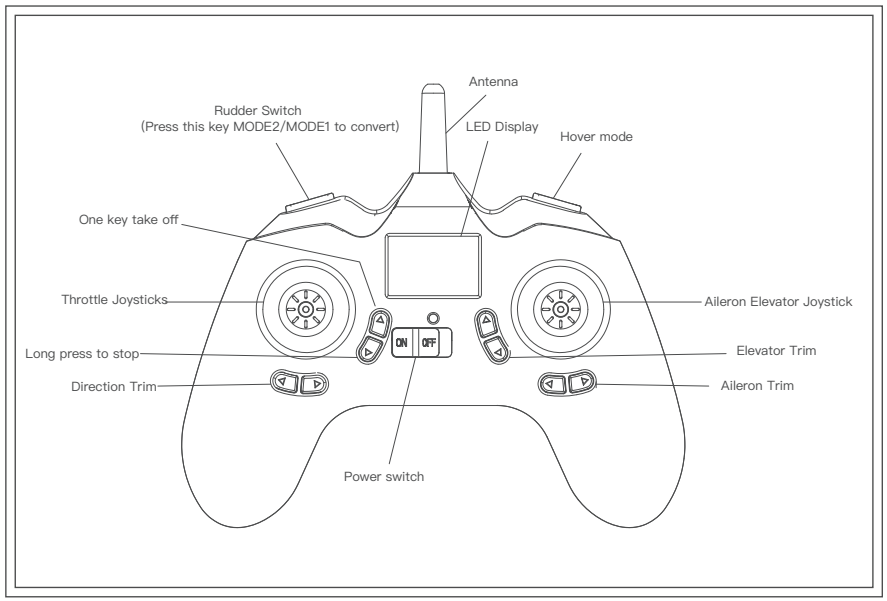

RIGHT HAND THROTTLE

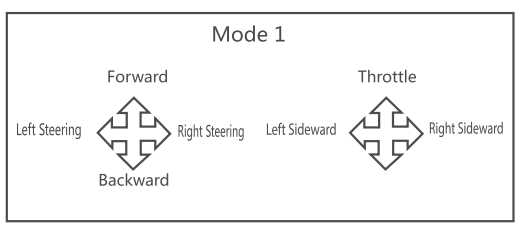

LEFT HAND THROTTLE

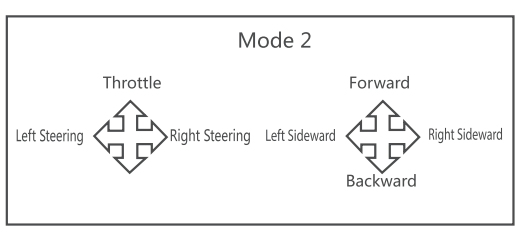

1. The transimitter can support MODE1/MODE2 change. Press D/R button to change, then to bind and fly.
2. Close off transmitter, and then power on, it will be back to default value.

FLIGHT BATTERY INSTALLMENT

1. Install the battery into the rack and connect it properly with the receiving power.
2. Once the battery is connected, the signal starts to blink. Keep it still and wait until the signal light stops blinking,which means the receiver has completed self-inspection and gets ready for flight.

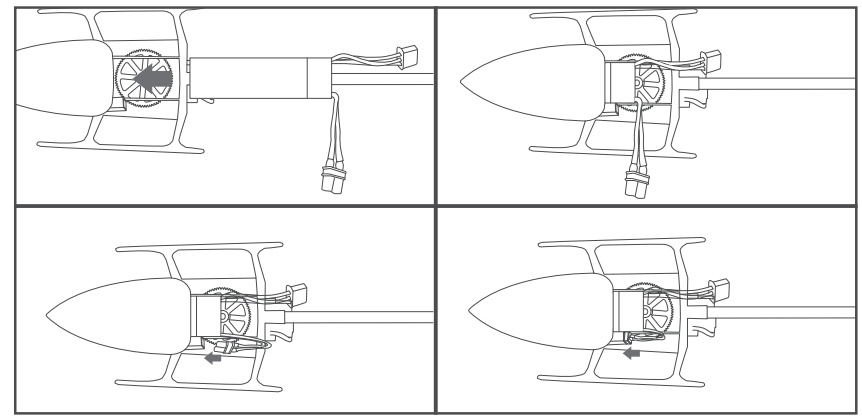

TROUBLESHOOTING

	Problem	Cause	Solution
1	LEDon receiver flashes constantly with no responses after conxssting batteries to transmitter.	Transmitter is not bound to receiver. Pairing of the transmitter and receiver failed.	Re-pair (Refer to P.5, Programming your Transmitter)
2	The helicopter has no response after connecting batteries to receiver.	Check whether the transmitter and receiver connecting to power; check the voltage of transmitter and receiver; Battery pole flake contact is not good.	Open the transmitter, make sure the batteries connecting is good Replace and charge transmitter batteries Make sure the battery pole flake contact is good.
3	When push the throttle pole, the rotor do not rotate and the LED on Receiver flashes constantly.	Low battery voltage; batteries connection is not good.	Replace and charge the batteries, reconnect the batteries to the receiver board.
4	Helicopter takes off immediately, once the batteries and receiver connected.	Didn't put the throttle to the lowest	Put the throttle pole at the lowest position before open the transmitter.
5	Turn on the helicopter after binding successfully, the propeller rotate constantly but the helicopter can not take off.	Low charge in aircraft batteries or main gear loose.	Replace and charge the batteries ; press the spindle with gear tightly.

	Problem	Cause	Solution
6	Helicopter vibrates or shakes in flight.	Damaged rotor blades and lateral axis blade grips too tight causing the movement of the main rotor isn't smooth.	Change the main rotor blades, and lateral axis Loosen the blade grips properly.
7	Main rotor blades are shaking in flying.	Lateral axis is bent Latreral axis screw is not tight .There are some debris in the servo, causing shakes . The loose between the swashplates. Deformed or damaged t ail rotor blades.	Replace the lateral axis. Tighten the lateral axis screw.Change the Bearing. Remove the servo,and clear debris. Compress the swash plates. change the tail rotor blades.
8	The sound of the main rotor becomes smaller.	Low battery voltage of helicopter.	Charge the battery or change a fully charged battery.
9	Helicopter has no reaction or can not fly smoothly.	Failure of binding	Rebind the helicopter and transmitter, make sure you place the helicopter static level next to the transmitter.
10	3D/6G model helicopter appeared yaw	Swashplate servos not back in to mid-position or damage	Length adjustment rod, so thatthe vertical spindle swashplate Replace the servo
11	Helicopter yaw occurs in 6G mode,	Helicopters hover need to reconfigure	Reference helicopter 6G mode setting
12	Helicopter took off spin to the left.	Tail motor power shortage loose blades Tail motor damage	Check with the tail rotor blades and the motor shaft, If loose replacement tail rotor blade. Motor damage Replace the tail motor.
13	Helicopter power is turned supreme speed governor electric sound	Brushless speed governor fault or poor contact	Check the connectors replace speed governor

RECEIVER INTERFACE DIAGRAM

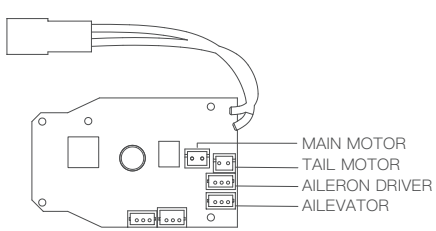

EXPLODED VIEW

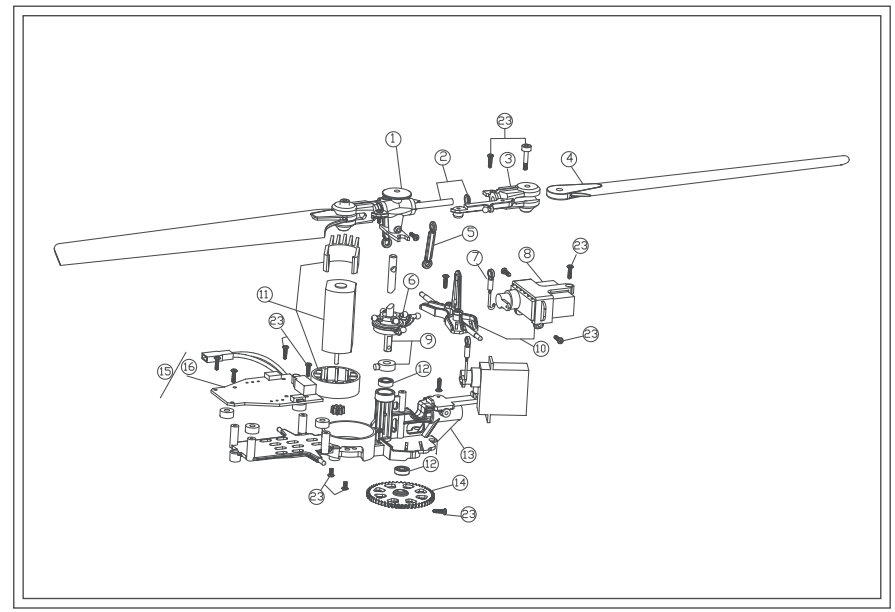

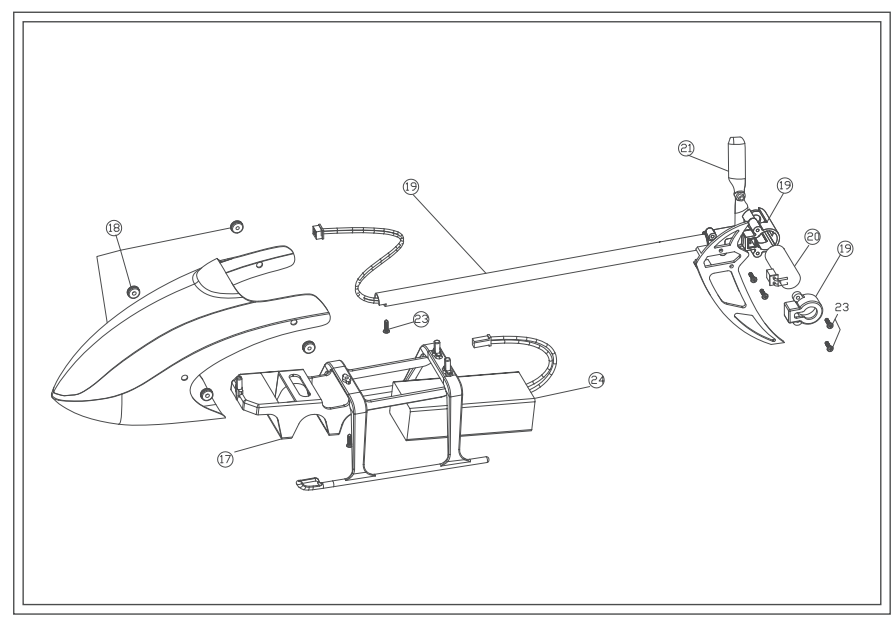

ACCESSORY LIST

NO.	PARA NAME	QUANTITY
1	Rotor Head Set	1
2	Horizontal Axis Group	2
3	Rotor Clip Set	1
4	Paddle Group	2
5	Link Group	1
6	Swash Plate Group	1
7	Lower Link Group	2
8	Rudder Unit	1
9	Spindle Group	2
10	Servo Pressure Plate Group	1
11	Main Motor Unit	1
12	Bearing Set	1
13	Main Rack Group	1
14	Big Gear Set	2
15	Flight Control Motherboard	1
16	Governor Group	2
17	Landing Gear Group	1
18	Chassis Group	1
19	Tailstock Group	1
20	Tail Motor Unit	2
21	Chassis Group	1
22	Rear Wing	1
23	Screw Set	1
24	Battery	1
25	USB Charger Set	1
26	Remote Control Unit	1

中文

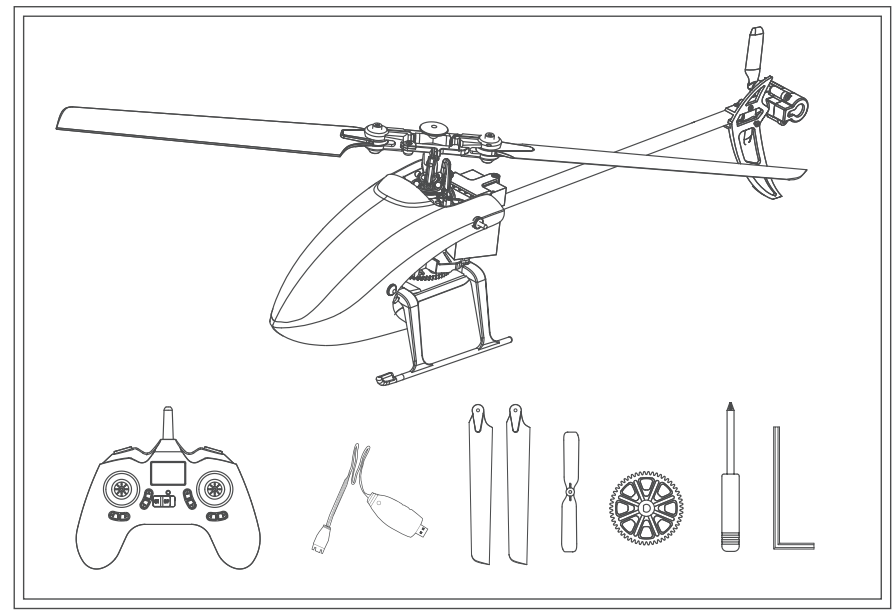

包装清单

序号	零件名称	数 量
1	PVC吸塑包装盒	1
2	使用说明书	1
3	直升机	1
4	发射机	1
5	充电器	1
6	电池7.4v 7ooman2u	1
7	十字螺丝刀+六角扳手	1
8	主桨+尾桨	1Set

注意事项

所有的说明，本公司有权更改担保及其他相关文件的权利，更新的信息请访问本厂网址。

警告

操作前，请阅读整个说明书以便了解该产品的功能。未能正确地操作本产品可能会导致产品损坏，对人身财产造成严重损害。这是一个复杂的模型产品，而不是一玩具。不仅要谨慎操作，还需要具备操作常识和操作基础。若未能安全使用该产品，会毁坏该产品或者对人身，或者对其他财产造成损失。本产品不供没有成人监督下的儿童直接使用。本手册内容包括安全、操作、维护。因此，在装配，安装或使用产品前。我们必须阅读并遵守本手册中所有的提示和警告,以便正确操作,避免造成损伤或严重伤害。

全措施防范和警告

1.年龄建议:不适合14岁以下的儿童，这不是一个玩具。
2.始终在开放的空间操作你的模型，远离车辆、交通和人。
3.必须仔细地遵循操作说明和警告，以及任何可选的支持设备。（充电器，可选充电电池等）
4.始终保持远离所有的化学品，细小部件跟用电设备需远离儿童接触。
5.应避免与水接触，尤其此设备的设计不具备防水功能;水汽也会导致电子产品损害。
6.切勿将模型的任何部件放在嘴里，因为它可能会导致严重受伤甚至死亡。
7.当发射机电池电压过低时切勿操作你的模型。

简介

这是一款飞行性能超经典的直升机，采用无副翼设计，减少旋翼头的阻力。引用空气动力学设计的桨叶，提供了强劲的动力及机体自稳性。电子采用新型陀螺仪，6轴模式超稳定，特别适合初学者飞行。

飞过这款微型直升机后，你会发现以前飞过的微型直升机在他面前都会黯然失色，这才是一款真正无法比拟的，真正适合大众化的直升机，初学者会觉得他很好飞，飞行高手会觉得他很有趣味，是绝对值得拥有和称赞的。

本说明书有助于你详细了解该产品，有详细的产品功能介绍，飞行前请仔细阅读。

目录

包装清单 1
注意事项 2
警告 2
附加安全措施防范和警告 2
简介 2
目录 3
飞机参数 4
电池使用警告与向导 4
电池充电 4
飞前注意事项 5
发射机和接收机对码 5
油门曲线与螺距曲线设置参照表 6
首次飞行指挥 7
接收机接口图 7
发射机使用说明 8
安装飞行电池 9
如何排除飞行中的异常 9
爆炸图 11
零件清单 12
配件列表 12

飞机参数

长度	345 MM
高度	108 MM
重量	131g
主桨长度	320MM
起落架宽度	62MM
电池规格	7.4v 700mah 20C
飞行时间	12-20 分钟
主电机	050
尾电机	8520

电池使用警告与向导

附带的电池充电器可以安全的给聚合物锂电池充电。

警告: 充电时建议使用原厂提供的电源充电器,否则会导致财产损失和伤害发生。

注意: 当低于7.4V时,锂电池可能会被损坏，或者可能不再接受充电;飞机飞行时电池电压低于7.4V时,飞行动力下降明显,请立即降落并且及时给电池充电。

电池充电

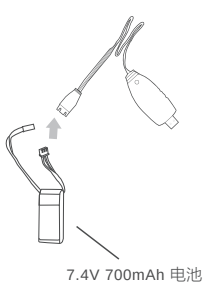

1. 用户需自备具有USB插座的电源适配器，或者连接电脑USB插座。
2. 将专用的USB充电器与电源适配器进行连接，此时USB充电器红灯闪亮。
3. 电池的分压充电头与USB充电器进行连接，此时USB充电器红灯长亮，充电进行中。
4.当USB充电器红灯熄灭，充电完成。

警告

1. 为了确保安全，请在有人监护下进行充电。
2. 儿童不可独自进行充电，要在成人协助下进行充电。
3. 请使用本产品原装标配充电器进行充电，使用来历不明的充电器可能发生燃烧爆炸事故。
4. 建议用户自备2A电流的适配器，将会缩短充电时间。

飞前注意事项

1. 确认发射机电源是否充足，直升机电源是否充足。
2. 打开发射机电源开关时，请确认发射机油门摇杆在最下方。
3. 确认发射机与直升机是否同频，如果异常请重新对码。
4. 开机时先打开发射机，然后将电池连接上接收机进行对码，关机时先拔掉电池与接收机的连接线，再关闭发射机电源。
5. 寻找个合适飞行的场地，远离人群、车、高压电塔、水塘等，方可进行安全愉快的飞行。

发射机和接收机对码

1. 打开遥控器，遥控器发出长滴音提示，此时遥控器电源指示灯闪动。
2. 给飞行器上电，接收板指示灯闪动，将油门摇杆拨动到最上位置然后到最下位置，遥控器发出一声滴音，此时遥控器灯转为长亮，接收板指示灯也恢复长亮 ，对频完成。
3. 如对频不成功，请断开飞机电源 关闭发射机，重复上述步骤，重新对频。

飞行器水平校准

1. 当飞行器出现明显偏航，可通过水平校准校正飞行姿态
2. 如图示将左右摇杆同时打到左下角位置1-2秒，此时飞行器指示灯进入快闪，飞机进入水平校准，待飞机指示灯恢复长亮，校准完成。

特别提示： 校准需要找比较平的场地，尽可能保证飞机与地面水平。
飞机进入校准程序后，需保证飞机静止不动，校准完成后才能移动飞机。

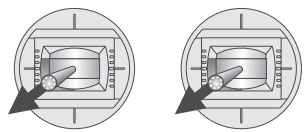

飞行器悬停设定

你所购买的飞行器出厂前已经设定完成，如果飞行器不能很好进入悬停，你可通过以下步骤进行设定

1. 给飞机上电，对频后起飞。
2. 飞行中长按悬停设定键进入设定，遥控器发出滴声，指示灯开始闪动。
3. 根据飞行器偏航的方向，向反方向拨动对应通道的微调键，直到飞机能搞平稳悬停。
4. 将飞行器降落，按悬停设定键退出设定，此时遥控器发出滴声，指示灯恢复常亮。
5. 重新启动飞机与遥控器电源，重新对频即可飞行。

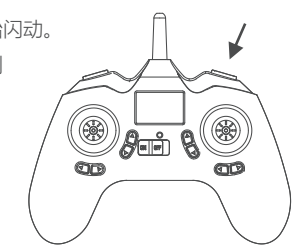

首次飞行指挥

如果你不熟悉直升机的控制，花几分钟熟悉它们，然后尝试你的第一次飞行。

油 门

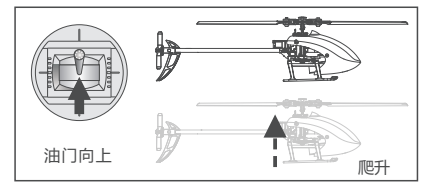

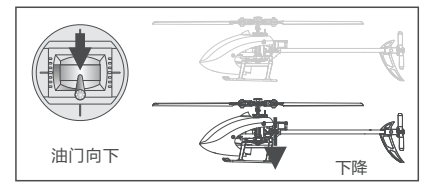

方 向

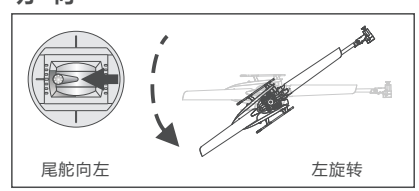

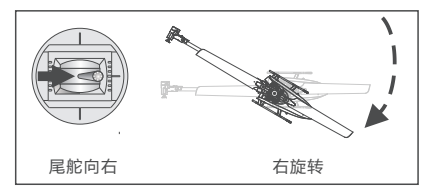

升 降

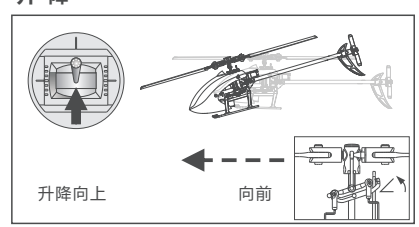

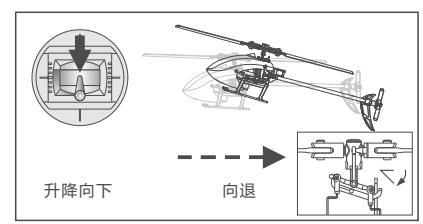

副 翼

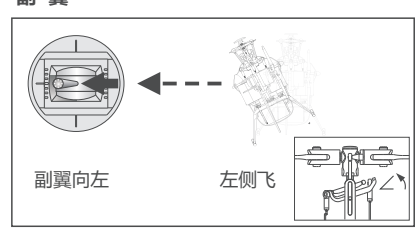

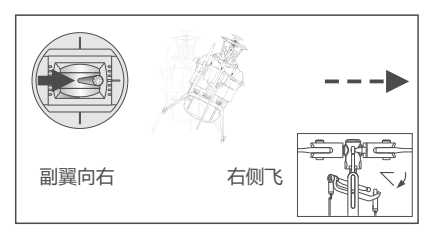

开始你的首次飞行

1. 将对频成功的飞行水平放置在地面上，确保飞机机尾对向你，机头在前。
2. 如图示，同时将摇杆分别掰动在左下角和右下角，马达启动，再次如图示意掰摇杆则紧急关闭马达。

注 意: 飞行器降落地面后，需保持油门摇杆在最下位置2-3秒，飞机马达彻底停止转动后在松开摇杆。

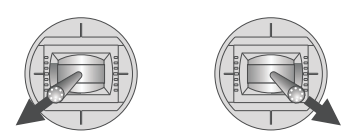

遥控器使用说明

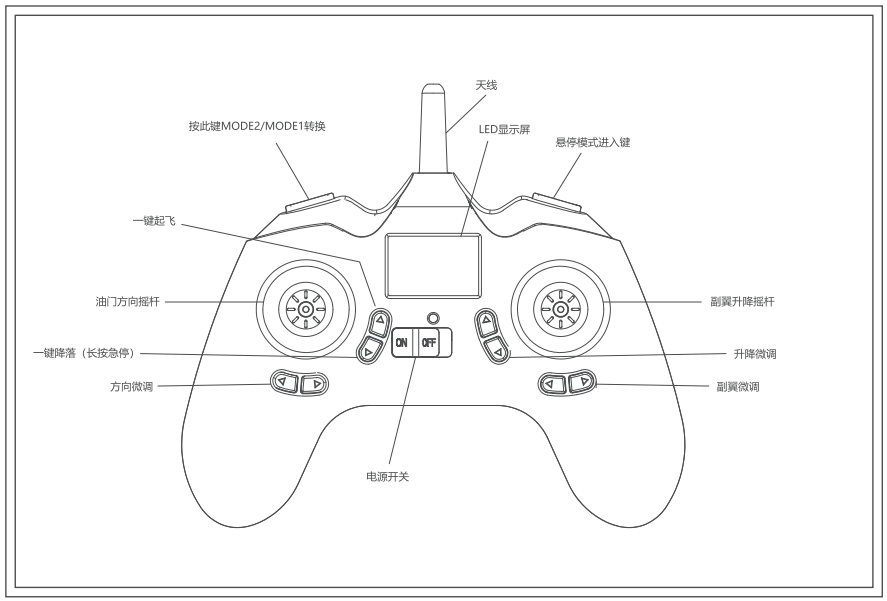

右手油门

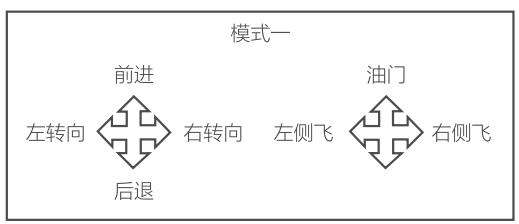

左手油门

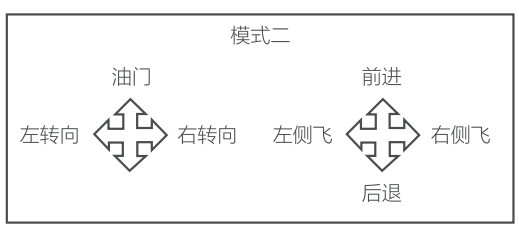

1. 该遥控器支持临时MODE2和MODE1转换，按左手上方大小舵量按键开机进行转换。转换后可直接对频飞行。
2. 遥控器关闭电源重新开启，则恢复到出厂模式。

安装飞行电池

1. 将电池装入机架内并与接收机电源进行正确连接。
2. 接通电池后信号灯闪烁，静止平放待信号灯停止闪烁，接收机自检完成，即可飞行。

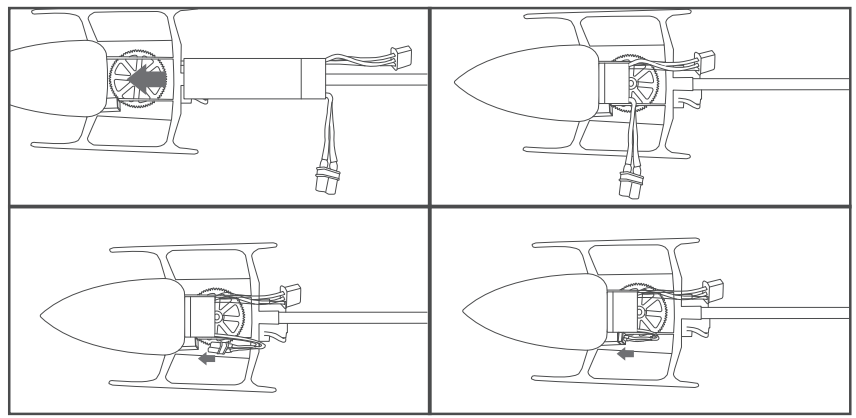

除飞行中的异常

	状 况	原 因	对 策
1	电池与接收机连接后，接收机提示灯持续闪烁，操作无反应。	发射机与接收机对码失败。	请重新执行发射机与接收机对码对码（参阅P5发射机与接收机对码）
2	电池与接收机连接后，直升机没有任何反应。	检查发射机与接收机是否接通电源;检查发射机与接收机电池电压;电泄极片接触不良。	打开发射机，确认电池安装位置;使用完全充饱电的电池;重新插入电池，确认电池与电池极片的接触是否正常。
3	推动油门摇t杆时，马达不转，且接收机提示灯开始闪烁。	直升机电池电压不足;电池插头与接收机插座接触不良。	将电池充电或更换一个充饱电的电池;重新连接电池与接收机。
4	电池与接收机连接，对码成功后，直升机马上起飞。	打开发射机前，油门摇杆没有置于最下方。	打开发射机前，将油门摇杆置于最下方。
5	对码成功后，起动直升机，主桨有持续转动，但不能飞。	直升机电池电压不足主轴齿轮松开。	将电池充电或更换一个充饱的电池,将主轴与齿轮压紧。

	状况	原 因	对 策
6	直升机震动的很厉害。	主桨变形,横轴弯曲,尾桨变形, 桨夹螺丝锁太紧，导致主桨不动。	更换主桨, 更换主轴, 更换尾桨, 将桨夹螺丝适当拧松。
7	飞行时主桨出现双桨产生抖动。	横轴弯曲,横轴螺丝没锁紧,桨夹轴承磨损,舵机有杂物进入导致抖动,上斜盘与下斜盘松动,尾桨变形或破损。	更换横轴,锁紧横轴螺丝并运动顺畅,更换轴承,取下舵机，清除舵机杂物,压紧上斜盘与下斜盘,更换尾桨。
8	直升机主桨声音变小。	直升机电池电压不足。	将电池充电或更换一个充饱电的电池。
9	直升机无任何反应或不能平稳飞行。	信号绑定失败。	重新绑定，绑定时小直升机需水平放置。
10	直升机3D/6G模式下都出现偏航	十字盘没回中或者舵机损坏	调整连杆的长度，使十字盘与主轴垂直，更换舵机
11	直升机在6G模式下出现偏航	直升机悬停需要重新设定	参考直升机6G模式设定
12	直升机起飞向左打转。	尾马达力量不足桨叶松动 尾马达损坏	检查尾桨叶与马达轴的配合, 如果松动更换尾桨叶。马达损坏 更换尾马达。
13	直升机接通电源调速器无上电音	无刷调速器故障或接触不良	检查接头，更换调速器。

接收机接口图

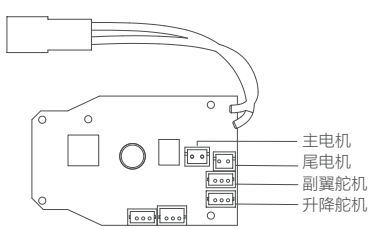

爆炸图

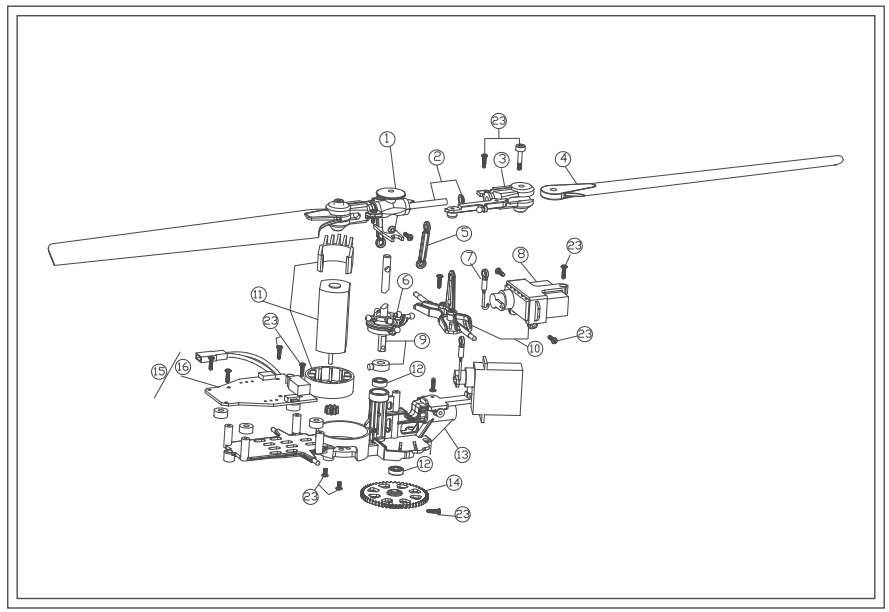

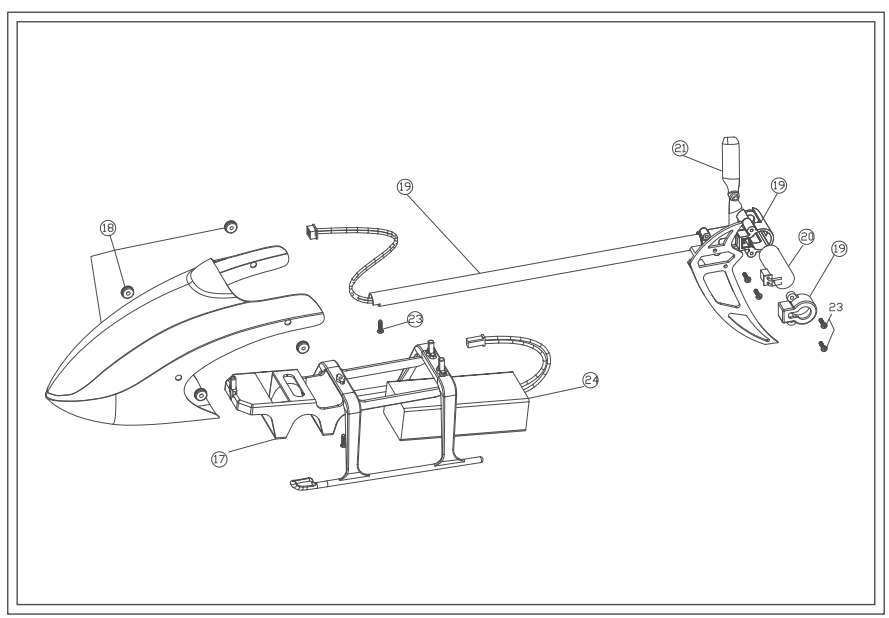

零件清单

序 号	零件名称	数 量
1	旋翼头组	1
2	横轴组	2
3	旋翼夹组	1
4	桨叶组	2
5	连杆组	1
6	十字盘组	1
7	下连杆组	2
8	舵机组	1
9	主轴组	2
10	舵机压板组	1
11	主电机组	2
12	轴承组	1
13	主机架组	1
14	大齿轮组	1
15	飞控主板组	2
16	起落架组	2
17	机壳组	1
18	尾杆组	1
19	尾电机组	2
20	尾桨组	1
21	尾翼组	1
22	螺丝组	1
23	电池组	1
24	uSB充电器组	1
25	遥控器组	1