Shenzhen CTA Testing Technology Co., Ltd.
Room 106, Building 1, Yibaolai Industrial Park, Qiaotou Community, Fuhai Street, Bao'an District, Shenzhen, China

FCC TEST REPORT

FCC Part 22/Part 24/Part 27/Part 90

Report Reference No.....:	**CTA24050902609**
FCC ID..... :	**2AYD5-I24P01**
Compiled by (position+printed name+signature)..:	File administrators Jinghua Xiao
Supervised by (position+printed name+signature)..:	Test Engineer Lushan Kong
Approved by (position+printed name+signature)..:	Manager Eric Wang
Date of issue.....:	May. 11, 2024

Representative Laboratory Name.:	**Shenzhen CTA Testing Technology Co., Ltd.**
Address .....:	Room 106, Building 1, Yibaolai Industrial Park, Qiaotou Community, Fuhai Street, Bao'an District, Shenzhen, China
Applicant's name.....:	**Imin Technology Pte Ltd**
Address .....:	11 Bishan Street 21, #03-05 Bosch Building, Singapore 573943
Test specification .....:	
Standard .....:	**FCC CFR Title 47 Part 2, Part 22H, Part 24E,Part 27, Part 90 EIA/TIA 603-E**
TRF Originator.....:	Shenzhen Global Test Service Co.,Ltd..

Shenzhen CTA Testing Technology Co., Ltd. All rights reserved.
This publication may be reproduced in whole or in part for non-commercial purposes as long as the Shenzhen CTA Testing Technology Co., Ltd. is acknowledged as copyright owner and source of the material. Shenzhen CTA Testing Technology Co., Ltd. takes no responsibility for and will not assume liability for damages resulting from the reader's interpretation of the reproduced material due to its placement and context.

Test item description .....:	**Mobile Data Terminal, Mobile Computer, Handheld Data Terminal,Wireless Handheld Terminal**
Trade Mark .....:	iMIN
Manufacturer .....:	Imin Technology Pte Ltd
Model/Type reference.....:	I24P01
Listed Models .....:	N/A
Modulation Type .....:	QPSK, 16QAM
Hardware Version .....:	N/A
Software Version .....:	N/A
Rating .....:	DC 3.87V by battery Recharged by DC 9.0V
Result.....:	**PASS**

TEST REPORT

Test Report No. :	CTA24050902609	May. 11, 2024 Date of issue

Equipment under Test	:	Mobile Data Terminal, Mobile Computer, Handheld Data Terminal, Wireless Handheld Terminal
Model /Type	:	I24P01
Listed model	:	N/A
Applicant	:	**Imin Technology Pte Ltd**
Address	:	11 Bishan Street 21, #03-05 Bosch Building, Singapore 573943
Manufacturer	:	**Imin Technology Pte Ltd**
Address	:	11 Bishan Street 21, #03-05 Bosch Building, Singapore 573943

Test result	Pass *

∗ In the configuration tested, the EUT complied with the standards specified page 4.

The test report merely corresponds to the test sample.
It is not permitted to copy extracts of these test result without the written permission of the test laboratory.

Contents

1 SUMMARY 4
1.1 TEST STANDARDS 4
2 GENERAL INFORMATION 5
2.1 General Remarks 5
2.2 Product Description 5
2.3 Equipment Under Test 7
2.4 Short description of the Equipment under Test (EUT) 7
2.5 Environmental conditions 7
2.6 Description of Test Modes 7
2.7 Block Diagram of Test Setup 8
2.8 Related Submittal(s) / Grant (s) 8
2.9 Special Accessories 8
2.10 External I/O Cable 8
2.11 Modifications 8
3 TEST ENVIRONMENT 9
3.1 Address of the test laboratory 9
3.2 Test Facility 9
3.3 Environmental conditions 9
3.4 Statement of the measurement uncertainty 9
3.5 Test Description 10
3.6 Equipments Used during the Test 11
4 TEST CONDITIONS AND RESULTS 12
4.1 Output Power 12
4.2 Peak-to-Average Ratio (PAR) 37
4.3 Occupied Bandwidth and Emission Bandwidth 38
4.4 Band Edge compliance 39
4.5 Spurious Emission 40
4.6 Frequency Stability under Temperature & Voltage Variations 68
5 TEST SETUP PHOTOS OF THE EUT 81
6 EXTERNAL AND INTERNAL PHOTOS OF THE EUT 81

1 SUMMARY

1.1 TEST STANDARDS

The tests were performed according to following standards:
FCC Part 22 : PUBLIC MOBILE SERVICES
FCC Part 24 : PERSONAL COMMUNICATIONS SERVICES
FCC Part 27 : MISCELLANEOUS WIRELESS COMMUNICATIONS SERVICES
FCC Part 90: Private Land Mobile Radio Services.
TIA-603-E: Land Mobile FM or PM Communications Equipment Measurement and Performance Standards.
47 CFR FCC Part 15 Subpart B: - Unintentional Radiators
FCC Part 2: FREQUENCY ALLOCA-TIONS AND RADIO TREATY MAT-TERS; GENERAL RULES AND REG-ULATIONS
FCC KDB971168 D01 Power Meas License Digital Systems v03r01
ANSI C63.4: Methods of Measurement of Radio-Noise Emissions from Low-Voltage Electrical and Electronic Equipment in the Range of 9 kHz to 40 GHz

2 GENERAL INFORMATION

2.1 General Remarks

Date of receipt of test sample	:	Apr. 13, 2024
Testing commenced on	:	Apr. 13, 2024
Testing concluded on	:	May. 10, 2024

2.2 Product Description

Product Name:	Mobile Data Terminal, Mobile Computer, Handheld Data Terminal, Wireless Handheld Terminal
Trade Mark:	iMiN
Model/Type reference:	I24P01
List Model:	N/A
Model Declaration	N/A
Power supply:	DC 3.87V by battery Recharged by DC 9.0V
Hardware Version	N/A
Software Version	N/A
Sample ID	GTS20240329015-1-S0001-1#, GTS20240329015-1-S0001-2#
Bluetooth	
Frequency Range	2402MHz ~ 2480MHz
Channel Number	79 channels for Bluetooth (DSS) 40 channels for Bluetooth (DTS)
Channel Spacing	1MHz for Bluetooth (DSS) 2MHz for Bluetooth (DTS)
Modulation Type	GFSK, π/4-DQPSK, 8-DPSK for Bluetooth (DSS) GFSK for Bluetooth (DTS)
2.4GWLAN	
WLAN Operation frequency	IEEE 802.11b:2412-2462MHz IEEE 802.11g:2412-2462MHz IEEE 802.11n HT20:2412-2462MHz
WLAN Modulation Type	IEEE 802.11b: DSSS (CCK, DQPSK, DBPSK) IEEE 802.11g: OFDM (64QAM, 16QAM, QPSK, BPSK) IEEE 802.11n HT20: OFDM (64QAM, 16QAM, QPSK, BPSK)
Channel number:	11 Channel for IEEE 802.11b/g/n (HT20)
Channel separation:	5MHz
WIFI (5.2G/5.3G/5.7G/5.8G Band)	
Frequency Range	5180-5240MHz/ 5260MHz to 5320MHz/ 5500MHz to 5700MHz/ 5745MHz to 5825MHz
Channel Number	4 Channels for 20MHz bandwidth(5180-5240MHz) 4 Channels for 20MHz bandwidth(5260-5320MHz) 11 Channels for 20MHz bandwidth(5500-5700MHz) 5 channels for 20MHz bandwidth(5745-5825MHz) 2 channels for 40MHz bandwidth(5190~5230MHz) 2 channels for 40MHz bandwidth(5270~5310MHz) 5 Channels for 40MHz bandwidth(5510-5670MHz) 2 channels for 40MHz bandwidth(5755~5795MHz) 1 channels for 80MHz bandwidth(5210MHz) 1 channels for 80MHz bandwidth(5290MHz) 2 Channels for 80MHz bandwidth(5530-5610MHz) 1 channels for 80MHz bandwidth(5775MHz)

Modulation Type	IEEE 802.11a: OFDM (64QAM, 16QAM, QPSK, BPSK) IEEE 802.11n HT20: OFDM (64QAM, 16QAM, QPSK, BPSK) IEEE 802.11n HT40: OFDM (64QAM, 16QAM, QPSK, BPSK) IEEE 802.11ac VHT20: OFDM (256QAM,64QAM, 16QAM, QPSK, BPSK) IEEE 802.11ac VHT40: OFDM (256QAM,64QAM, 16QAM, QPSK, BPSK) IEEE 802.11ac VHT80: OFDM (256QAM,64QAM, 16QAM, QPSK, BPSK)
Antenna Description	Internal Antenna, -0.18dBi(Max.) for 2.4G Band and 4.01dBi(Max.) for 5G Band
2G	
Support Band	GPRS850/GPRS1900/EDGE850/EDGE1900
Release Version	R99
GPRS Class	Class 12
EGPRS Class	Class 12
GPRS/EDGE Multislot Class	GPRS/EDGE: Multi-slot Class 12
Type Of Modulation	GMSK for GPRS; GMSK/8PSK for EGPRS
Antenna Description	Internal Antenna -0.82dBi (max.) For GPRS850/EDGE850 -0.77dBi (max.) For GPRS1900/EDGE1900
3G	
UMTS Operation Frequency Band	UMTS FDD Band 2(1850 MHz -1910MHz) UMTS FDD Band 5(824 MHz -849MHz)
WCDMA Release Version	R7
HSDPA Release Version	Release 5
HSUPA Release Version	Release 6
HSPA+ Release Version	Release 7
Modulation Type	QPSK for UMTS
Antenna Description	Internal Antenna -0.77dBi (max.) For WCDMA Band 2 -0.82dBi (max.) For WCDMA Band 5
LTE	
LTE Operation Frequency Band	E-UTRA Band 2(1850 MHz -1910MHz) E-UTRA Band 4(1710 MHz -1755MHz) E-UTRA Band 5(824 MHz -849MHz) E-UTRA Band 7(2500 MHz -2570MHz) E-UTRA Band 12(699 MHz -716MHz) E-UTRA Band 14(788 MHz -798MHz) E-UTRA Band 17(704 MHz -716MHz) E-UTRA Band 25(1850 MHz -1915MHz) E-UTRA Band 26(814 MHz -824MHz) E-UTRA Band 26(824 MHz -849MHz) E-UTRA Band 41(2496 MHz -2690MHz) E-UTRA Band 66(1710 MHz -1780MHz)
LTE Release Version	R10
Type Of Modulation	QPSK/16QAM
Antenna Description	Internal Antenna; -0.77dBi (max.) For LTE Band 2; -0.8dBi (max.) For LTE Band 4; -0.82dBi (max.) For LTE Band 5; 2.47dBi (max.) For LTE Band 7; -2.7dBi (max.) For LTE Band 12; -2.63dBi (max.) For LTE Band 14;

	-2.7dBi (max.) For LTE Band 17; -0.77dBi (max.) For LTE Band 25; -0.82dBi (max.) For LTE Band 26; 2.51dBi (max.) For LTE Band 41; -0.8dBi (max.) For LTE Band 66;
RFID(13.56MHz) (Optional)	
Frequency Range	13.56MHz
Channel Number	1
Modulation Type	ASK
Antenna Description	Internal Antenna, 0dBi (Max.)
GPS(RX)	Support
Remark:The I24P01 model has 2 versions; Version A: With fingerprint recognition function Version B: No fingerprint recognition function	

2.3 Equipment Under Test

Power supply system utilised

Power supply voltage	:	○	230V / 50 Hz	○	120V / 60Hz
		○	12 V DC	○	24 V DC
		●	Other (specified in blank below)		

DC 3.87V

2.4 Short description of the Equipment under Test (EUT)

This is a Mobile Data Terminal, Mobile Computer, Handheld DataTerminal,Wireless Handheld Terminal.

For more details, refer to the user's manual of the EUT.

2.5 Environmental conditions

During the measurement the environmental conditions were within the listed ranges:

Normal Temperature:	25°C
Relative Humidity:	55 %
Air Pressure:	101 kPa

2.6 Description of Test Modes

The EUT has been tested under typical operating condition. The CMW500 used to control the EUT staying in continuous transmitting and receiving mode for testing. Regards to the frequency band operation: the lowest、middle and highest frequency of channel were selected to perform the test, then shown on this report.

Note:

1. For the ERP/EIRP and radiated emission test, every axis (X, Y, Z) was verified, and show the worst resulton this report.
2. Test method and refer to 3GPP TS136521.

2.7 Block Diagram of Test Setup

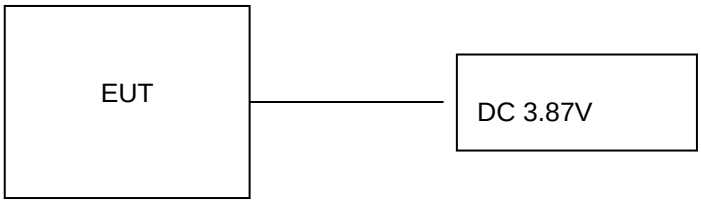

2.8 Related Submittal(s) / Grant (s)

This submittal(s) (test report) is filing to comply with of the FCC Part 24, Part 27 Rules.

2.9 Special Accessories

Manufacturer	Description	Model	Serial Number	Certificate
SHENZHEN TIANYIN ELECTRONICS CO.,LTD.	Adapter	TPD-203A120167UF01	--	SDOC
/	Charger Base	Lark1 Dock A	--	SDOC
/	Hand Shank	Lark1 Handle	--	SDOC

Note:The product accessories are selected by customers to matched product to use.

2.10 External I/O Cable

I/O Port Description	Quantity	Cable
DC IN Port	1	1.0M, Unscreened Cable

2.11 Modifications

No modifications were implemented to meet testing criteria.

3 TEST ENVIRONMENT

3.1 Address of the test laboratory

Shenzhen CTA Testing Technology Co., Ltd.
Room 106, Building 1, Yibaolai Industrial Park, Qiaotou Community, Fuhai Street, Bao'an District, Shenzhen, China

3.2 Test Facility

The test facility is recognized, certified, or accredited by the following organizations:
FCC-Registration No.: 517856 Designation Number: CN1318
Shenzhen CTA Testing Technology Co., Ltd. has been listed on the US Federal Communications Commission list of test facilities recognized to perform electromagnetic emissions measurements.
A2LA-Lab Cert. No.: 6534.01
Shenzhen CTA Testing Technology Co., Ltd. has been listed by American Association for Laboratory Accreditation to perform electromagnetic emission measurement.
The 3m-Semi anechoic test site fulfils CISPR 16-1-4 according to ANSI C63.10 and CISPR 16-1-4:2010.

3.3 Environmental conditions

During the measurement the environmental conditions were within the listed ranges:

Temperature:	15-35 ° C
Humidity:	30-60 %
Atmospheric pressure:	950-1050mbar

3.4 Statement of the measurement uncertainty

The data and results referenced in this document are true and accurate. The reader is cautioned that there may be errors within the calibration limits of the equipment and facilities. The measurement uncertainty was calculated for all measurements listed in this test report acc. to TR-100028-01" Electromagnetic compatibility and Radio spectrum Matters (ERM);Uncertainties in the measurement of mobile radio equipment characteristics; Part 1" and TR-100028-02 "Electromagnetic compatibility and Radio spectrum Matters (ERM);Uncertainties in the measurement of mobile radio equipment characteristics; Part 2 " and is documented in the Shenzhen CTA Testing Technology Co., Ltd. quality system acc. to DIN EN ISO/IEC 17025. Furthermore, component and process variability of devices similar to that tested may result in additional deviation. The manufacturer has the sole responsibility of continued compliance of the device.
Hereafter the best measurement capability for Shenzhen CTA Testing Technology Co., Ltd. :

Test	Range	Measurement Uncertainty	Notes
Radiated Emission	30~1000MHz	4.10 dB	(1)
Radiated Emission	1~18GHz	4.32 dB	(1)
Radiated Emission	18-40GHz	5.54 dB	(1)
Conducted Disturbance	0.15~30MHz	3.12 dB	(1)

This uncertainty represents an expanded uncertainty expressed at approximately the 95% confidence level using a coverage factor of k=2.

3.5 Test Description

Test Item	Section in CFR 47	Test Sample	Result
RF Output Power	Part 2.1046 Part 22.913(a) Part 24.232(c) Part 27.50 Part 90.635	GTS20240329015-1-S0001-1#	Pass
Peak-to-Average Ratio	Part 2.1046 Part 24.232 Part 27.50(d)	GTS20240329015-1-S0001-1#	Pass
99% & -26 dB Occupied Bandwidth	Part 2.1049	GTS20240329015-1-S0001-1#	Pass
Spurious Emissions at Antenna Terminal	Part 2.1051 Part 22.917 Part 24.238 Part 27.53 Part 90.691	GTS20240329015-1-S0001-1# GTS20240329015-1-S0001-2#	Pass
Field Strength of Spurious Radiation	Part 2.1053 Part 22.917(b) Part 24.238 Part 27.53 Part 90.691	GTS20240329015-1-S0001-1#	Pass
Out of band emission, Band Edge	Part 2.1051 Part 22.917(b) Part 22.917(b) Part 24.238 Part 27.53 Part 90.691	GTS20240329015-1-S0001-1#	Pass
Frequency stability	Part 2.1055 Part 22.355 Part 24.235 Part 27.54 Part 90.213	GTS20240329015-1-S0001-1#	Pass

Remark:
1. The measurement uncertainty is not included in the test result.
2. NA = Not Applicable; NP = Not Performed
3. Note 1 – Test results inside test report;
4. Note 2 – Test results in other test report (SAR Report).
5. We tested all test mode and recorded worst case in report

3.6 Equipments Used during the Test

Test Equipment	Manufacturer	Model No.	Equipment No.	Calibration Date	Calibration Due Date
LISN	R&S	ENV216	CTA-308	2023/08/02	2024/08/01
LISN	R&S	ENV216	CTA-314	2023/08/02	2024/08/01
EMI Test Receiver	R&S	ESPI	CTA-307	2023/08/02	2024/08/01
EMI Test Receiver	R&S	ESCI	CTA-306	2023/08/02	2024/08/01
Spectrum Analyzer	Agilent	N9020A	CTA-301	2023/08/02	2024/08/01
Spectrum Analyzer	R&S	FSP	CTA-337	2023/08/02	2024/08/01
Vector Signal generator	Agilent	N5182A	CTA-305	2023/08/02	2024/08/01
Analog Signal Generator	R&S	SML03	CTA-304	2023/08/02	2024/08/01
Universal Radio Communication	CMW500	R&S	CTA-302	2023/08/02	2024/08/01
Temperature and humidity meter	Chigo	ZG-7020	CTA-326	2023/08/02	2024/08/01
Ultra-Broadband Antenna	Schwarzbeck	VULB9163	CTA-310	2023/10/17	2024/10/16
Horn Antenna	Schwarzbeck	BBHA 9120D	CTA-309	2023/10/13	2024/10/12
Loop Antenna	Zhinan	ZN30900C	CTA-311	2023/10/17	2024/10/16
Horn Antenna	Beijing Hangwei Dayang	OBH100400	CTA-336	2021/08/07	2024/08/06
Antenna Tower	Suzhou Keletuo electronic Technology Co., LTD	BK-*AT-BS	N/A	N/A	N/A
Radio Communication Tester	Rohde&Schwarz	CMW500	CTA-407	2023/08/02	2024/08/01
Amplifier	Schwarzbeck	BBV 9745	CTA-312	2023/08/02	2024/08/01
Amplifier	Taiwan chengyi	EMC051845B	CTA-313	2023/08/02	2024/08/01
Directional coupler	NARDA	4226-10	CTA-303	2023/08/02	2024/08/01
High-Pass Filter	XingBo	XBLBQ-GTA18	CTA-402	2023/08/02	2024/08/01
High-Pass Filter	XingBo	XBLBQ-GTA27	CTA-403	2023/08/02	2024/08/01
Automated filter bank	Tonscend	JS0806-F	CTA-404	2023/08/02	2024/08/01
Power Sensor	Agilent	U2021XA	CTA-405	2023/08/02	2024/08/01
Amplifier	Schwarzbeck	BBV9719	CTA-406	2023/08/02	2024/08/01

Note: The Cal.Interval was one year.

4 TEST CONDITIONS AND RESULTS

4.1 Output Power

LIMIT

The ERP of mobile transmitters must not exceed 100 Watts for LTE Band 26.
The ERP of mobile transmitters must not exceed 7 Watts for LTE Band 5, LTE Band 26.
The ERP of mobile transmitters must not exceed 30 Watts for LTE Band 14.
The ERP of mobile transmitters must not exceed 3 Watts for LTE Band 12, LTE Band 17.

The EIRP of mobile transmitters must not exceed 2 Watts for LTE Band 2, LTE Band 7, LTE Band 25 ,LTE Band 41.

The EIRP of mobile transmitters must not exceed 1 Watts for LTE Band 4 and Band 66.

TEST CONFIGURATION

Conducted Power Measurement

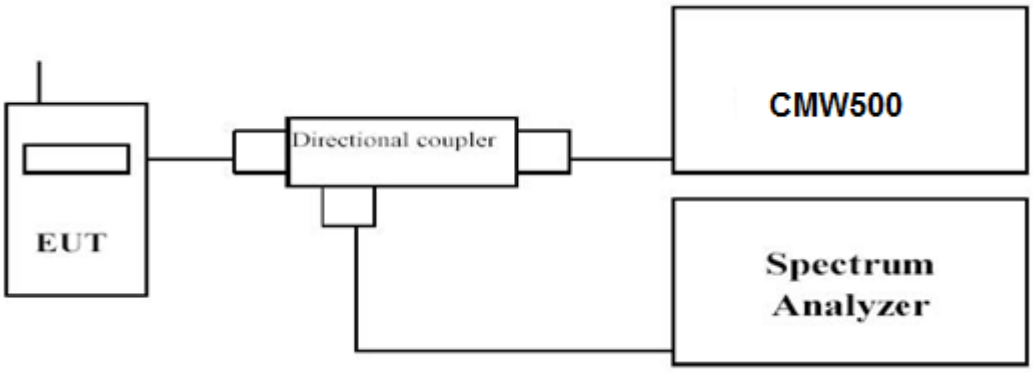

Radiated Power Measurement:

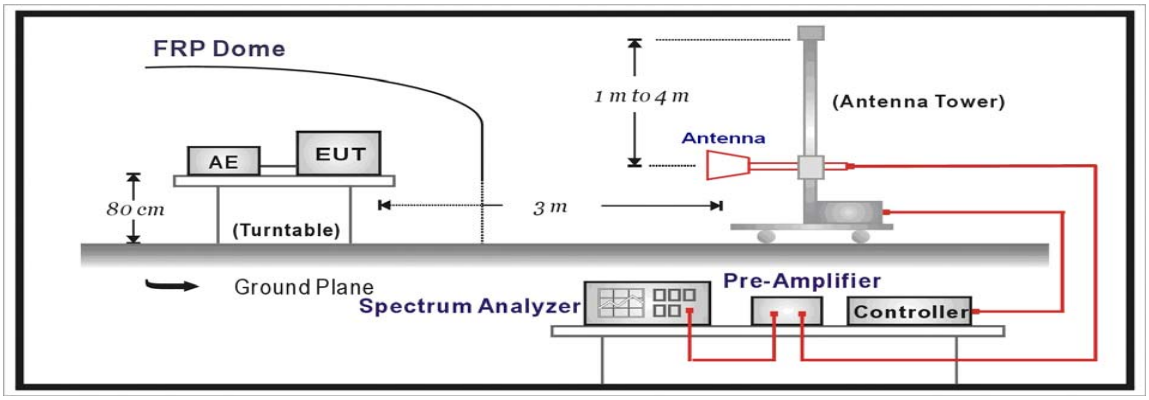

TEST PROCEDURE

The EUT was setup according to EIA/TIA 603D

Conducted Power Measurement:

a) Place the EUT on a bench and set it in transmitting mode.
b) Connect a low loss RF cable from the antenna port to a spectrum analyzer and CMW500 by a Directional Couple.
c) EUT Communicate with CMW500, then select a channel for testing.
d) Add a correction factor to the display of spectrum, and then test.

Radiated Power Measurement:

a. The EUT shall be placed at the specified height on a support, and in the position closest to normal use as declared by provider.
b. The test antenna shall be oriented initially for vertical polarization and shall be chosen to correspond to thefrequency of the transmitter
c. The output of the test antenna shall be connected to the measuring receiver.
d. The transmitter shall be switched on and the measuring receiver shall be tuned to the frequency of the
e. transmitter under test.
f. The test antenna shall be raised and lowered through the specified range of height until a maximum signal level is detected by the measuring receiver.
g. The transmitter shall then be rotated through 360° in the horizontal plane, until the maximum signal level is detected by the measuring receiver.
h. The test antenna shall be raised and lowered again through the specified range of height until a maximum signal level is detected by the measuring receiver.
i. The maximum signal level detected by the measuring receiver shall be noted.
j. The transmitter shall be replaced by a substitution antenna.
k. The substitution antenna shall be orientated for vertical polarization and the length of the substitution antenna shall be adjusted to correspond to the frequency of the transmitter.
l. The substitution antenna shall be connected to a calibrated signal generator.
m. If necessary, the input attenuator setting of the measuring receiver shall be adjusted in order to increase the sensitivity of the measuring receiver.
n. The test antenna shall be raised and lowered through the specified range of height to ensure that the maximum signal is received.
o. The input signal to the substitution antenna shall be adjusted to the level that produces a level detected by the measuring receiver, that is equal to the level noted while the transmitter radiated power was measured, corrected for the change of input attenuator setting of the measuring receiver.
p. The measurement shall be repeated with the test antenna and the substitution antenna orientated for horizontal polarization.
q. The measure of the effective radiated power is the larger of the two levels recorded at the input to the substitution antenna, corrected for gain of the substitution antenna if necessary.
r. Test site anechoic chamber refer to ANSI C63.26.

TEST RESULTS

Temperature	24.5℃	Humidity	53.7%
Test Engineer	Lushan Kong	Configurations	LTE

Conducted Measurement:

Remark:

We were tested all RB Configuration refer 3GPP TS136 521 for each Channel Bandwidth of LTE FDD Band 2, LTE FDD Band 4, LTE FDD Band 5, LTE FDD Band 7, LTE FDD Band 12, LTE FDD Band 14, LTE FDD Band 17, LTE FDD Band 25, LTE FDD Band 26, LTE TDD Band 41, LTE FDD Band 66 ; recorded worst case for each Channel Bandwidth of LTE FDD Band 2, LTE FDD Band 4, LTE FDD Band 5, LTE FDD Band 7, LTE FDD Band 12, LTE FDD Band 14, LTE FDD Band 17, LTE FDD Band 25, LTE FDD Band 26, LTE TDD Band 41, LTE FDD Band 66;

1.For E-UTRA Band 2, please refer to Appendix Band 2: Section A;
2.For E-UTRA Band 4, please refer to Appendix Band 4: Section A;
3.For E-UTRA Band 5, please refer to Appendix Band 5: Section A;
4.For E-UTRA Band 7, please refer to Appendix Band 7: Section A;
5.For E-UTRA Band 12, please refer to Appendix Band 12: Section A;
6.For E-UTRA Band 14, please refer to Appendix Band 14: Section A;
7.For E-UTRA Band 17, please refer to Appendix Band 17: Section A;
8.For E-UTRA Band 25, please refer to Appendix Band 25: Section A;
9.For E-UTRA Band 26(814 MHz -824MHz), please refer to Appendix Band 26(814 MHz -824MHz): Section A;
10.For E-UTRA Band 26(824 MHz -849MHz), please refer to Appendix Band 26(824 MHz -849MHz): Section A;
11.For E-UTRA Band 41, please refer to Appendix Band 41: Section A;
12.For E-UTRA Band 66, please refer to Appendix Band 66: Section A;
NOTE:We measured all modes and only recorded the worst case.

Radiated Measurement:

Remark:

1. We were tested all RB Configuration refer 3GPP TS136 521 for each Channel Bandwidth of LTE FDD Band 2, LTE FDD Band 4, LTE FDD Band 5, LTE FDD Band 7, LTE FDD Band 12, LTE FDD Band 14, LTE FDD Band 17, LTE FDD Band 25, LTE FDD Band 26, LTE TDD Band 41, LTE FDD Band 66 ; recorded worst case for each Channel Bandwidth of LTE FDD Band 2, LTE FDD Band 4, LTE FDD Band 5, LTE FDD Band 7, LTE FDD Band 12, LTE FDD Band 14, LTE FDD Band 17, LTE FDD Band 25, LTE FDD Band 26, LTE TDD Band 41, LTE FDD Band 66;
2. ERP = EIRP – 2.15dBi as EIRP by subtracting the gain of the dipole.
3. The unit of Antenna Gain is dBd for frequency below 1GHz, and the unit of Antenna Gain is dBi for frequency above 1GHz.
4. Absolute Level = Substituted Level - Cable loss + Antenna Gain
5. Margin = Limit-Absolute Level

Temperature	24.5℃	Humidity	53.7%
Test Engineer	Lushan Kong	Configurations	LTE

LTE Band 2

Frequency (MHz)	BW (MHz)	Modulation	Polar (H/V)	Receiver Reading (dBμV)	Substituted Method			Absolute Level ERP (dBm)	Limit (dBm)	Margin (dB)
					Substituted Level (dBm)	Antenna Gain (dBd/dBi)	Cable Loss (dB)			
1850.70	1.4	QPSK	H	85.77	12.58	11.03	2.27	21.35	33.00	11.65
1850.70			V	85.29	12.65	11.03	2.27	21.42	33.00	11.58
1851.50	3		H	86.66	11.82	11.03	2.27	20.59	33.00	12.41
1851.50			V	85.68	12.76	11.03	2.27	21.53	33.00	11.47
1852.50	5		H	86.37	13.03	11.03	2.27	21.80	33.00	11.20
1852.50			V	85.95	11.95	11.03	2.27	20.71	33.00	12.29
1855.00	10		H	87.17	13.38	11.03	2.27	22.14	33.00	10.86
1855.00			V	85.77	12.01	11.03	2.27	20.78	33.00	12.22
1857.50	15		H	85.83	12.87	11.03	2.27	21.63	33.00	11.37
1857.50			V	86.66	12.61	11.03	2.27	21.37	33.00	11.63
1860.00	20		H	85.17	12.85	11.03	2.27	21.62	33.00	11.38
1860.00			V	85.95	12.91	11.03	2.27	21.68	33.00	11.32
1850.70	1.4	16QAM	H	85.60	12.02	11.03	2.27	20.79	33.00	12.21
1850.70			V	87.03	11.86	11.03	2.27	20.62	33.00	12.38
1851.50	3		H	86.42	12.39	11.03	2.27	21.15	33.00	11.85
1851.50			V	86.03	13.48	11.03	2.27	22.24	33.00	10.76
1852.50	5		H	86.61	12.43	11.03	2.27	21.19	33.00	11.81
1852.50			V	87.00	12.79	11.03	2.27	21.55	33.00	11.45
1855.00	10		H	86.80	11.52	11.03	2.27	20.29	33.00	12.71
1855.00			V	86.68	13.28	11.03	2.27	22.04	33.00	10.96
1857.50	15		H	87.52	12.87	11.03	2.27	21.64	33.00	11.36
1857.50			V	86.48	12.89	11.03	2.27	21.66	33.00	11.34
1860.00	20		H	86.40	12.59	11.03	2.27	21.35	33.00	11.65
1860.00			V	86.31	13.32	11.03	2.27	22.09	33.00	10.91

Frequency (MHz)	BW (MHz)	Modulation	Polar (H/V)	Receiver Reading (dBμV)	Substituted Method			Absolute Level ERP (dBm)	Limit (dBm)	Margin (dB)
					Substituted Level (dBm)	Antenna Gain (dBd/dBi)	Cable Loss (dB)			
1880.00	1.4	QPSK	H	84.99	12.56	11.19	2.56	21.19	33.00	11.81
1880.00			V	85.45	13.36	11.19	2.56	21.99	33.00	11.01
1880.00	3		H	85.74	12.13	11.19	2.56	20.76	33.00	12.24
1880.00			V	85.28	13.49	11.19	2.56	22.12	33.00	10.88
1880.00	5		H	86.77	11.67	11.19	2.56	20.30	33.00	12.70
1880.00			V	86.26	12.60	11.19	2.56	21.23	33.00	11.77
1880.00	10		H	86.84	12.89	11.19	2.56	21.52	33.00	11.48
1880.00			V	84.48	12.68	11.19	2.56	21.31	33.00	11.69
1880.00	15		H	85.68	13.11	11.19	2.56	21.74	33.00	11.26
1880.00			V	86.27	13.06	11.19	2.56	21.69	33.00	11.31
1880.00	20		H	85.79	13.28	11.19	2.56	21.92	33.00	11.08
1880.00			V	85.42	11.97	11.19	2.56	20.60	33.00	12.40
1880.00	1.4	16QAM	H	85.36	12.89	11.19	2.56	21.52	33.00	11.48
1880.00			V	85.57	13.02	11.19	2.56	21.65	33.00	11.35
1880.00	3		H	86.37	13.49	11.19	2.56	22.12	33.00	10.88
1880.00			V	87.05	13.37	11.19	2.56	22.00	33.00	11.00
1880.00	5		H	86.26	13.48	11.19	2.56	22.11	33.00	10.89
1880.00			V	86.86	12.11	11.19	2.56	20.75	33.00	12.25
1880.00	10		H	87.11	11.67	11.19	2.56	20.30	33.00	12.70
1880.00			V	86.88	13.24	11.19	2.56	21.87	33.00	11.13
1880.00	15		H	86.53	12.98	11.19	2.56	21.61	33.00	11.39
1880.00			V	86.84	12.08	11.19	2.56	20.71	33.00	12.29
1880.00	20		H	86.06	12.18	11.19	2.56	20.81	33.00	12.19
1880.00			V	85.94	11.59	11.19	2.56	20.22	33.00	12.78

Frequency (MHz)	BW (MHz)	Modulation	Polar (H/V)	Receiver Reading (dBμV)	Substituted Method			Absolute Level ERP (dBm)	Limit (dBm)	Margin (dB)
					Substituted Level (dBm)	Antenna Gain (dBd/dBi)	Cable Loss (dB)			
1909.30	1.4	QPSK	H	85.59	12.71	11.80	2.14	22.37	33.00	10.63
1909.30			V	84.30	12.46	11.80	2.14	22.12	33.00	10.88
1908.50	3		H	85.17	12.46	11.80	2.14	22.12	33.00	10.88
1908.50			V	85.11	12.14	11.80	2.14	21.80	33.00	11.20
1907.50	5		H	86.24	11.82	11.80	2.14	21.48	33.00	11.52
1907.50			V	86.52	12.35	11.80	2.14	22.01	33.00	10.99
1905.00	10		H	86.56	12.60	11.80	2.14	22.26	33.00	10.74
1905.00			V	84.23	12.65	11.80	2.14	22.31	33.00	10.69
1902.50	15		H	85.56	11.53	11.80	2.14	21.19	33.00	11.81
1902.50			V	86.56	12.18	11.80	2.14	21.84	33.00	11.16
1900.00	20		H	86.13	13.25	11.80	2.14	22.91	33.00	10.09
1900.00			V	86.86	13.13	11.80	2.14	22.79	33.00	10.21
1909.30	1.4	16QAM	H	86.65	13.09	11.80	2.14	22.75	33.00	10.25
1909.30			V	85.94	11.77	11.80	2.14	21.43	33.00	11.57
1908.50	3		H	86.50	11.54	11.80	2.14	21.20	33.00	11.80
1908.50			V	87.07	12.57	11.80	2.14	22.23	33.00	10.77
1907.50	5		H	86.32	11.95	11.80	2.14	21.62	33.00	11.38
1907.50			V	87.35	13.20	11.80	2.14	22.86	33.00	10.14
1905.00	10		H	86.17	13.33	11.80	2.14	23.00	33.00	10.00
1905.00			V	85.98	12.36	11.80	2.14	22.03	33.00	10.97
1902.50	15		H	86.51	11.90	11.80	2.14	21.56	33.00	11.44
1902.50			V	87.70	11.57	11.80	2.14	21.23	33.00	11.77
1900.00	20		H	86.79	13.39	11.80	2.14	23.05	33.00	9.95
1900.00			V	86.19	12.08	11.80	2.14	21.75	33.00	11.25

LTE Band 4

Frequency (MHz)	BW (MHz)	Modulation	Polar (H/V)	Receiver Reading (dBμV)	Substituted Method			Absolute Level ERP (dBm)	Limit (dBm)	Margin (dB)
					Substituted Level (dBm)	Antenna Gain (dBd/dBi)	Cable Loss (dB)			
1710.70	1.4	QPSK	H	85.14	13.01	10.98	1.85	22.15	30.00	7.85
1710.70			V	85.34	12.74	10.98	1.85	21.88	30.00	8.12
1711.50	3		H	85.85	11.77	10.98	1.85	20.90	30.00	9.10
1711.50			V	84.39	13.40	10.98	1.85	22.54	30.00	7.46
1712.50	5		H	87.60	13.27	10.98	1.85	22.41	30.00	7.59
1712.50			V	86.45	12.99	10.98	1.85	22.12	30.00	7.88
1715.00	10		H	85.34	13.48	10.98	1.85	22.61	30.00	7.39
1715.00			V	84.45	13.39	10.98	1.85	22.53	30.00	7.47
1717.50	15		H	86.25	13.18	10.98	1.85	22.32	30.00	7.68
1717.50			V	87.09	12.27	10.98	1.85	21.41	30.00	8.59
1720.00	20		H	85.60	13.01	10.98	1.85	22.14	30.00	7.86
1720.00			V	85.46	12.67	10.98	1.85	21.80	30.00	8.20
1710.70	1.4	16QAM	H	86.14	12.43	10.98	1.85	21.57	30.00	8.43
1710.70			V	86.26	12.52	10.98	1.85	21.65	30.00	8.35
1711.50	3		H	87.08	12.59	10.98	1.85	21.72	30.00	8.28
1711.50			V	86.99	12.17	10.98	1.85	21.31	30.00	8.69
1712.50	5		H	86.90	13.04	10.98	1.85	22.17	30.00	7.83
1712.50			V	87.50	12.80	10.98	1.85	21.93	30.00	8.07
1715.00	10		H	86.56	12.36	10.98	1.85	21.49	30.00	8.51
1715.00			V	85.94	13.19	10.98	1.85	22.33	30.00	7.67
1717.50	15		H	86.61	12.73	10.98	1.85	21.87	30.00	8.13
1717.50			V	86.31	12.05	10.98	1.85	21.18	30.00	8.82
1720.00	20		H	85.96	12.92	10.98	1.85	22.05	30.00	7.95
1720.00			V	87.18	12.35	10.98	1.85	21.49	30.00	8.51

Frequency (MHz)	BW (MHz)	Modulation	Polar (H/V)	Receiver Reading (dBμV)	Substituted Method			Absolute Level ERP (dBm)	Limit (dBm)	Margin (dB)
					Substituted Level (dBm)	Antenna Gain (dBd/dBi)	Cable Loss (dB)			
1732.50	1.4	QPSK	H	85.58	12.50	11.56	2.24	21.81	30.00	8.19
1732.50			V	84.30	12.79	11.56	2.24	22.11	30.00	7.89
1732.50	3		H	85.11	12.70	11.56	2.24	22.02	30.00	7.98
1732.50			V	84.21	11.83	11.56	2.24	21.15	30.00	8.85
1732.50	5		H	85.89	12.71	11.56	2.24	22.02	30.00	7.98
1732.50			V	86.02	12.37	11.56	2.24	21.69	30.00	8.31
1732.50	10		H	85.62	11.94	11.56	2.24	21.25	30.00	8.75
1732.50			V	86.02	12.71	11.56	2.24	22.03	30.00	7.97
1732.50	15		H	86.97	12.17	11.56	2.24	21.48	30.00	8.52
1732.50			V	86.84	13.36	11.56	2.24	22.68	30.00	7.32
1732.50	20		H	85.77	12.54	11.56	2.24	21.86	30.00	8.14
1732.50			V	86.63	12.12	11.56	2.24	21.44	30.00	8.56
1732.50	1.4	16QAM	H	86.30	13.41	11.56	2.24	22.73	30.00	7.27
1732.50			V	85.93	11.91	11.56	2.24	21.23	30.00	8.77
1732.50	3		H	86.84	12.55	11.56	2.24	21.87	30.00	8.13
1732.50			V	86.27	12.90	11.56	2.24	22.21	30.00	7.79
1732.50	5		H	86.23	13.21	11.56	2.24	22.53	30.00	7.47
1732.50			V	87.18	12.55	11.56	2.24	21.86	30.00	8.14
1732.50	10		H	85.73	12.07	11.56	2.24	21.39	30.00	8.61
1732.50			V	87.28	12.74	11.56	2.24	22.05	30.00	7.95
1732.50	15		H	86.25	12.65	11.56	2.24	21.96	30.00	8.04
1732.50			V	87.54	11.74	11.56	2.24	21.06	30.00	8.94
1732.50	20		H	87.16	11.73	11.56	2.24	21.04	30.00	8.96
1732.50			V	86.11	12.98	11.56	2.24	22.30	30.00	7.70

Frequency (MHz)	BW (MHz)	Modulation	Polar (H/V)	Receiver Reading (dBμV)	Substituted Method			Absolute Level ERP (dBm)	Limit (dBm)	Margin (dB)
					Substituted Level (dBm)	Antenna Gain (dBd/dBi)	Cable Loss (dB)			
1754.30	1.4	QPSK	H	85.84	12.57	11.91	2.42	22.06	30.00	7.94
1754.30			V	84.35	13.45	11.91	2.42	22.93	30.00	7.07
1753.50	3		H	85.44	11.57	11.91	2.42	21.06	30.00	8.94
1753.50			V	86.00	13.44	11.91	2.42	22.93	30.00	7.07
1752.50	5		H	86.67	12.42	11.91	2.42	21.90	30.00	8.10
1752.50			V	85.61	12.82	11.91	2.42	22.31	30.00	7.69
1750.00	10		H	85.97	11.50	11.91	2.42	20.99	30.00	9.01
1750.00			V	86.17	13.22	11.91	2.42	22.71	30.00	7.29
1747.50	15		H	86.05	12.18	11.91	2.42	21.67	30.00	8.33
1747.50			V	85.69	13.47	11.91	2.42	22.96	30.00	7.04
1745.00	20		H	86.52	13.03	11.91	2.42	22.51	30.00	7.49
1745.00			V	87.20	12.91	11.91	2.42	22.40	30.00	7.60
1754.30	1.4	16QAM	H	85.80	13.20	11.91	2.42	22.69	30.00	7.31
1754.30			V	86.43	11.91	11.91	2.42	21.40	30.00	8.60
1753.50	3		H	86.00	13.07	11.91	2.42	22.55	30.00	7.45
1753.50			V	86.33	12.54	11.91	2.42	22.03	30.00	7.97
1752.50	5		H	87.45	12.03	11.91	2.42	21.52	30.00	8.48
1752.50			V	87.24	12.12	11.91	2.42	21.61	30.00	8.39
1750.00	10		H	87.47	11.97	11.91	2.42	21.46	30.00	8.54
1750.00			V	87.23	12.53	11.91	2.42	22.02	30.00	7.98
1747.50	15		H	87.49	11.72	11.91	2.42	21.20	30.00	8.80
1747.50			V	87.68	11.97	11.91	2.42	21.46	30.00	8.54
1745.00	20		H	87.18	11.77	11.91	2.42	21.26	30.00	8.74
1745.00			V	86.05	12.35	11.91	2.42	21.84	30.00	8.16

LTE Band 5

Frequency (MHz)	BW (MHz)	Modulation	Polar (H/V)	Receiver Reading (dBμV)	Substituted Method			Absolute Level ERP (dBm)	Limit (dBm)	Margin (dB)
					Substituted Level (dBm)	Antenna Gain (dBd/dBi)	Cable Loss (dB)			
824.70	1.4	QPSK	H	85.90	19.65	1.21	0.34	20.52	38.45	17.93
824.70			V	85.74	19.60	1.21	0.34	20.47	38.45	17.98
825.50	3		H	85.58	20.79	1.21	0.34	21.66	38.45	16.79
825.50			V	84.69	20.08	1.21	0.34	20.95	38.45	17.50
826.50	5		H	86.85	19.93	1.21	0.34	20.80	38.45	17.65
826.50			V	86.26	19.62	1.21	0.34	20.49	38.45	17.96
829.00	10		H	85.61	19.01	1.21	0.34	19.88	38.45	18.57
829.00			V	84.95	20.37	1.21	0.34	21.24	38.45	17.21
824.70	1.4	16QAM	H	86.67	20.71	1.21	0.34	21.58	38.45	16.87
824.70			V	86.89	19.82	1.21	0.34	20.69	38.45	17.76
825.50	3		H	85.92	19.04	1.21	0.34	19.91	38.45	18.54
825.50			V	86.95	19.03	1.21	0.34	19.90	38.45	18.55
826.50	5		H	86.65	20.11	1.21	0.34	20.98	38.45	17.47
826.50			V	85.55	20.12	1.21	0.34	20.99	38.45	17.46
829.00	10		H	85.47	19.16	1.21	0.34	20.03	38.45	18.42
829.00			V	85.67	19.78	1.21	0.34	20.65	38.45	17.80

Frequency (MHz)	BW (MHz)	Modulation	Polar (H/V)	Receiver Reading (dBμV)	Substituted Method			Absolute Level ERP (dBm)	Limit (dBm)	Margin (dB)
					Substituted Level (dBm)	Antenna Gain (dBd/dBi)	Cable Loss (dB)			
836.50	1.4	QPSK	H	86.41	20.93	1.20	0.46	21.66	38.45	16.79
836.50			V	85.49	20.78	1.20	0.46	21.51	38.45	16.94
836.50	3		H	85.92	19.75	1.20	0.46	20.48	38.45	17.97
836.50			V	86.03	20.25	1.20	0.46	20.98	38.45	17.47
836.50	5		H	86.56	20.39	1.20	0.46	21.12	38.45	17.33
836.50			V	86.34	20.03	1.20	0.46	20.77	38.45	17.68
836.50	10		H	87.15	19.05	1.20	0.46	19.79	38.45	18.66
836.50			V	84.81	19.06	1.20	0.46	19.79	38.45	18.66
836.50	1.4	16QAM	H	86.39	19.95	1.20	0.46	20.69	38.45	17.76
836.50			V	86.52	19.95	1.20	0.46	20.69	38.45	17.76
836.50	3		H	85.61	20.79	1.20	0.46	21.53	38.45	16.92
836.50			V	85.68	19.46	1.20	0.46	20.19	38.45	18.26
836.50	5		H	86.87	19.87	1.20	0.46	20.61	38.45	17.84
836.50			V	86.60	20.13	1.20	0.46	20.87	38.45	17.58
836.50	10		H	85.84	19.75	1.20	0.46	20.48	38.45	17.97
836.50			V	85.76	19.54	1.20	0.46	20.27	38.45	18.18

Frequency (MHz)	BW (MHz)	Modulation	Polar (H/V)	Receiver Reading (dBμV)	Substituted Method			Absolute Level ERP (dBm)	Limit (dBm)	Margin (dB)
					Substituted Level (dBm)	Antenna Gain (dBd/dBi)	Cable Loss (dB)			
848.30	1.4	QPSK	H	85.80	19.28	1.70	0.41	20.58	38.45	17.87
848.30			V	84.36	19.72	1.70	0.41	21.02	38.45	17.43
847.50	3		H	85.15	20.76	1.70	0.41	22.05	38.45	16.40
847.50			V	85.58	19.70	1.70	0.41	20.99	38.45	17.46
846.50	5		H	85.97	20.17	1.70	0.41	21.46	38.45	16.99
846.50			V	86.06	20.74	1.70	0.41	22.03	38.45	16.42
844.00	10		H	86.03	19.57	1.70	0.41	20.87	38.45	17.58
844.00			V	85.64	20.52	1.70	0.41	21.81	38.45	16.64
848.30	1.4	16QAM	H	86.33	20.04	1.70	0.41	21.33	38.45	17.12
848.30			V	86.86	19.34	1.70	0.41	20.63	38.45	17.82
847.50	3		H	86.26	19.74	1.70	0.41	21.03	38.45	17.42
847.50			V	85.59	19.08	1.70	0.41	20.38	38.45	18.07
846.50	5		H	86.80	20.43	1.70	0.41	21.72	38.45	16.73
846.50			V	86.44	20.92	1.70	0.41	22.21	38.45	16.24
844.00	10		H	86.86	19.97	1.70	0.41	21.26	38.45	17.19
844.00			V	86.69	20.62	1.70	0.41	21.91	38.45	16.54

LTE Band 7

Frequency (MHz)	BW (MHz)	Modulation	Polar (H/V)	Receiver Reading (dBμV)	Substituted Method			Absolute Level (dBm)	Limit (dBm)	Margin (dB)
					Substituted Level (dBm)	Antenna Gain (dBd/dBi)	Cable Loss (dB)			
2502.50	5	QPSK	H	85.69	11.89	11.02	1.74	21.16	33.00	11.84
2502.50			V	84.47	11.80	11.02	1.74	21.07	33.00	11.93
2505.00	10		H	87.00	12.18	11.02	1.74	21.45	33.00	11.55
2505.00			V	85.15	11.75	11.02	1.74	21.03	33.00	11.97
2507.50	15		H	86.05	11.96	11.02	1.74	21.23	33.00	11.77
2507.50			V	86.88	12.13	11.02	1.74	21.40	33.00	11.60
2510.00	20		H	85.40	12.67	11.02	1.74	21.95	33.00	11.05
2510.00			V	85.35	13.49	11.02	1.74	22.77	33.00	10.23
2502.50	5	16QAM	H	86.24	11.69	11.02	1.74	20.96	33.00	12.04
2502.50			V	86.25	13.12	11.02	1.74	22.40	33.00	10.60
2505.00	10		H	86.70	11.73	11.02	1.74	21.01	33.00	11.99
2505.00			V	86.68	13.25	11.02	1.74	22.52	33.00	10.48
2507.50	15		H	85.50	12.22	11.02	1.74	21.49	33.00	11.51
2507.50			V	85.61	13.21	11.02	1.74	22.49	33.00	10.51
2510.00	20		H	86.24	12.31	11.02	1.74	21.59	33.00	11.41
2510.00			V	86.20	13.19	11.02	1.74	22.46	33.00	10.54

Frequency (MHz)	BW (MHz)	Modulation	Polar (H/V)	Receiver Reading (dBµV)	Substituted Method			Absolute Level (dBm)	Limit (dBm)	Margin (dB)
					Substituted Level (dBm)	Antenna Gain (dBd/dBi)	Cable Loss (dB)			
2535.00	5	QPSK	H	85.83	11.62	11.28	1.79	21.11	33.00	11.89
2535.00			V	84.43	13.46	11.28	1.79	22.94	33.00	10.06
2535.00	10		H	86.45	12.09	11.28	1.79	21.57	33.00	11.43
2535.00			V	85.14	13.27	11.28	1.79	22.76	33.00	10.24
2535.00	15		H	87.44	13.03	11.28	1.79	22.52	33.00	10.48
2535.00			V	85.73	13.07	11.28	1.79	22.55	33.00	10.45
2535.00	20		H	87.11	13.28	11.28	1.79	22.77	33.00	10.23
2535.00			V	84.78	11.71	11.28	1.79	21.20	33.00	11.80
2535.00	5	16QAM	H	85.34	12.87	11.28	1.79	22.36	33.00	10.64
2535.00			V	86.03	12.06	11.28	1.79	21.54	33.00	11.46
2535.00	10		H	86.85	11.93	11.28	1.79	21.42	33.00	11.58
2535.00			V	86.77	12.60	11.28	1.79	22.08	33.00	10.92
2535.00	15		H	85.53	12.98	11.28	1.79	22.46	33.00	10.54
2535.00			V	86.35	13.13	11.28	1.79	22.61	33.00	10.39
2535.00	20		H	85.55	13.33	11.28	1.79	22.81	33.00	10.19
2535.00			V	87.00	13.08	11.28	1.79	22.57	33.00	10.43

Frequency (MHz)	BW (MHz)	Modulation	Polar (H/V)	Receiver Reading (dBµV)	Substituted Method			Absolute Level (dBm)	Limit (dBm)	Margin (dB)
					Substituted Level (dBm)	Antenna Gain (dBd/dBi)	Cable Loss (dB)			
2567.50	5	QPSK	H	85.89	12.39	11.71	2.54	21.56	33.00	11.44
2567.50			V	85.36	12.92	11.71	2.54	22.09	33.00	10.91
2565.00	10		H	86.58	12.84	11.71	2.54	22.01	33.00	10.99
2565.00			V	85.34	11.55	11.71	2.54	20.72	33.00	12.28
2562.50	15		H	86.37	11.86	11.71	2.54	21.03	33.00	11.97
2562.50			V	86.34	12.59	11.71	2.54	21.76	33.00	11.24
2560.00	20		H	86.04	12.92	11.71	2.54	22.09	33.00	10.91
2560.00			V	84.68	11.56	11.71	2.54	20.73	33.00	12.27
2567.50	5	16QAM	H	85.47	13.18	11.71	2.54	22.35	33.00	10.65
2567.50			V	86.59	13.35	11.71	2.54	22.52	33.00	10.48
2565.00	10		H	85.90	12.81	11.71	2.54	21.98	33.00	11.02
2565.00			V	86.75	12.03	11.71	2.54	21.20	33.00	11.80
2562.50	15		H	86.63	12.56	11.71	2.54	21.73	33.00	11.27
2562.50			V	86.90	13.35	11.71	2.54	22.52	33.00	10.48
2560.00	20		H	86.05	12.32	11.71	2.54	21.49	33.00	11.51
2560.00			V	85.79	13.32	11.71	2.54	22.49	33.00	10.51

LTE Band 12

Frequency (MHz)	BW (MHz)	Modulation	Polar (H/V)	Receiver Reading (dBμV)	Substituted Method			Absolute Level ERP (dBm)	Limit (dBm)	Margin (dB)
					Substituted Level (dBm)	Antenna Gain (dBd/dBi)	Cable Loss (dB)			
699.70	1.4	QPSK	H	85.09	20.66	0.97	0.39	21.24	34.77	13.53
699.70			V	85.13	19.54	0.97	0.39	20.11	34.77	14.66
700.50	3		H	85.48	19.69	0.97	0.39	20.26	34.77	14.51
700.50			V	85.62	19.29	0.97	0.39	19.87	34.77	14.90
701.50	5		H	86.23	20.32	0.97	0.39	20.90	34.77	13.87
701.50			V	86.16	20.11	0.97	0.39	20.68	34.77	14.09
704.50	10		H	86.43	19.32	0.97	0.39	19.90	34.77	14.87
704.50			V	84.43	19.78	0.97	0.39	20.35	34.77	14.42
699.70	1.4	16QAM	H	86.40	20.67	0.97	0.39	21.25	34.77	13.52
699.70			V	85.96	20.44	0.97	0.39	21.02	34.77	13.75
700.50	3		H	85.64	20.10	0.97	0.39	20.68	34.77	14.09
700.50			V	85.45	20.34	0.97	0.39	20.92	34.77	13.85
701.50	5		H	85.98	19.55	0.97	0.39	20.13	34.77	14.64
701.50			V	85.52	19.50	0.97	0.39	20.07	34.77	14.70
704.50	10		H	85.49	20.35	0.97	0.39	20.93	34.77	13.84
704.50			V	86.00	19.30	0.97	0.39	19.87	34.77	14.90

Frequency (MHz)	BW (MHz)	Modulation	Polar (H/V)	Receiver Reading (dBμV)	Substituted Method			Absolute Level ERP (dBm)	Limit (dBm)	Margin (dB)
					Substituted Level (dBm)	Antenna Gain (dBd/dBi)	Cable Loss (dB)			
707.50	1.4	QPSK	H	85.22	20.21	1.08	0.67	20.62	34.77	14.15
707.50			V	85.27	19.76	1.08	0.67	20.17	34.77	14.60
707.50	3		H	86.34	20.17	1.08	0.67	20.58	34.77	14.19
707.50			V	86.09	20.97	1.08	0.67	21.38	34.77	13.39
707.50	5		H	86.08	20.91	1.08	0.67	21.32	34.77	13.45
707.50			V	86.45	20.47	1.08	0.67	20.88	34.77	13.89
707.50	10		H	86.56	19.75	1.08	0.67	20.16	34.77	14.61
707.50			V	85.25	20.22	1.08	0.67	20.63	34.77	14.14
707.50	1.4	16QAM	H	85.26	20.97	1.08	0.67	21.38	34.77	13.39
707.50			V	86.30	19.39	1.08	0.67	19.80	34.77	14.97
707.50	3		H	86.78	19.95	1.08	0.67	20.36	34.77	14.41
707.50			V	85.24	19.28	1.08	0.67	19.69	34.77	15.08
707.50	5		H	86.27	19.88	1.08	0.67	20.29	34.77	14.48
707.50			V	86.76	20.46	1.08	0.67	20.88	34.77	13.89
707.50	10		H	86.15	20.44	1.08	0.67	20.85	34.77	13.92
707.50			V	86.87	19.77	1.08	0.67	20.18	34.77	14.59

Frequency (MHz)	BW (MHz)	Modulation	Polar (H/V)	Receiver Reading (dBμV)	Substituted Method			Absolute Level ERP (dBm)	Limit (dBm)	Margin (dB)
					Substituted Level (dBm)	Antenna Gain (dBd/dBi)	Cable Loss (dB)			
715.30	1.4	QPSK	H	84.99	19.60	1.44	0.64	20.39	34.77	14.38
715.30			V	84.33	19.72	1.44	0.64	20.52	34.77	14.25
714.50	3		H	85.45	20.82	1.44	0.64	21.61	34.77	13.16
714.50			V	85.38	21.03	1.44	0.64	21.82	34.77	12.95
713.50	5		H	87.12	20.66	1.44	0.64	21.45	34.77	13.32
713.50			V	85.68	19.63	1.44	0.64	20.42	34.77	14.35
711.00	10		H	86.86	20.55	1.44	0.64	21.34	34.77	13.43
711.00			V	84.23	19.23	1.44	0.64	20.02	34.77	14.75
715.30	1.4	16QAM	H	85.69	19.55	1.44	0.64	20.34	34.77	14.43
715.30			V	85.78	19.39	1.44	0.64	20.18	34.77	14.59
714.50	3		H	85.78	20.69	1.44	0.64	21.48	34.77	13.29
714.50			V	85.30	19.47	1.44	0.64	20.26	34.77	14.51
713.50	5		H	85.97	20.71	1.44	0.64	21.51	34.77	13.26
713.50			V	86.82	20.06	1.44	0.64	20.85	34.77	13.92
711.00	10		H	86.96	19.82	1.44	0.64	20.61	34.77	14.16
711.00			V	85.97	20.77	1.44	0.64	21.56	34.77	13.21

LTE Band 14

Frequency (MHz)	BW (MHz)	Modulation	Polar (H/V)	Receiver Reading (dBμV)	Substituted Method			Absolute Level ERP (dBm)	Limit (dBm)	Margin (dB)
					Substituted Level (dBm)	Antenna Gain (dBd/dBi)	Cable Loss (dB)			
790.50	5	QPSK	H	86.63	18.00	1.02	0.32	18.70	44.77	26.07
790.50			V	84.74	19.90	1.02	0.32	20.60	44.77	24.17
793.00	10		H	86.64	18.15	1.02	0.32	18.85	44.77	25.92
793.00			V	84.46	19.75	1.02	0.32	20.45	44.77	24.32
790.50	5	16QAM	H	86.93	19.41	1.02	0.32	20.12	44.77	24.65
790.50			V	87.19	19.60	1.02	0.32	20.30	44.77	24.47
793.00	10		H	85.92	18.42	1.02	0.32	19.13	44.77	25.64
793.00			V	85.39	19.59	1.02	0.32	20.29	44.77	24.48

Frequency (MHz)	BW (MHz)	Modulation	Polar (H/V)	Receiver Reading (dBμV)	Substituted Method			Absolute Level ERP (dBm)	Limit (dBm)	Margin (dB)
					Substituted Level (dBm)	Antenna Gain (dBd/dBi)	Cable Loss (dB)			
793.00	5	QPSK	H	86.42	19.80	1.35	0.29	20.87	44.77	23.90
793.00			V	84.40	18.75	1.35	0.29	19.81	44.77	24.96
793.00	10		H	85.25	19.39	1.35	0.29	20.45	44.77	24.32
793.00			V	84.34	19.16	1.35	0.29	20.22	44.77	24.55
793.00	5	16QAM	H	87.21	18.47	1.35	0.29	19.53	44.77	25.24
793.00			V	85.88	18.56	1.35	0.29	19.62	44.77	25.15
793.00	10		H	86.42	18.36	1.35	0.29	19.42	44.77	25.35
793.00			V	85.99	18.37	1.35	0.29	19.44	44.77	25.33

Frequency (MHz)	BW (MHz)	Modulation	Polar (H/V)	Receiver Reading (dBμV)	Substituted Method			Absolute Level ERP (dBm)	Limit (dBm)	Margin (dB)
					Substituted Level (dBm)	Antenna Gain (dBd/dBi)	Cable Loss (dB)			
795.50	5	QPSK	H	85.75	18.57	1.63	0.67	19.53	44.77	25.24
795.50			V	86.09	18.50	1.63	0.67	19.46	44.77	25.31
793.00	10		H	85.52	18.16	1.63	0.67	19.12	44.77	25.65
793.00			V	85.10	18.82	1.63	0.67	19.79	44.77	24.98
795.50	5	16QAM	H	86.32	18.31	1.63	0.67	19.27	44.77	25.50
795.50			V	86.26	18.88	1.63	0.67	19.84	44.77	24.93
793.00	10		H	86.68	18.63	1.63	0.67	19.59	44.77	25.18
793.00			V	84.91	18.08	1.63	0.67	19.05	44.77	25.72

LTE Band 17

Frequency (MHz)	BW (MHz)	Modulation	Polar (H/V)	Receiver Reading (dBμV)	Substituted Method			Absolute Level EIRP (dBm)	Limit (dBm)	Margin (dB)
					Substituted Level (dBm)	Antenna Gain (dBd/dBi)	Cable Loss (dB)			
706.50	5	QPSK	H	85.51	19.65	1.02	0.55	20.12	34.77	14.65
706.50			V	85.07	19.37	1.02	0.55	19.84	34.77	14.93
709.00	10		H	85.49	20.47	1.02	0.55	20.94	34.77	13.83
709.00			V	84.16	20.09	1.02	0.55	20.56	34.77	14.21
706.50	5	16QAM	H	86.61	20.63	1.02	0.55	21.10	34.77	13.67
706.50			V	86.48	19.46	1.02	0.55	19.94	34.77	14.83
709.00	10		H	86.60	20.21	1.02	0.55	20.68	34.77	14.09
709.00			V	84.93	21.09	1.02	0.55	21.56	34.77	13.21

Frequency (MHz)	BW (MHz)	Modulation	Polar (H/V)	Receiver Reading (dBμV)	Substituted Method			Absolute Level EIRP (dBm)	Limit (dBm)	Margin (dB)
					Substituted Level (dBm)	Antenna Gain (dBd/dBi)	Cable Loss (dB)			
710.00	5	QPSK	H	86.03	20.91	1.45	0.55	21.81	34.77	12.96
710.00			V	85.46	20.88	1.45	0.55	21.78	34.77	12.99
710.00	10		H	85.65	20.06	1.45	0.55	20.96	34.77	13.81
710.00			V	85.52	19.49	1.45	0.55	20.39	34.77	14.38
710.00	5	16QAM	H	86.17	19.57	1.45	0.55	20.46	34.77	14.31
710.00			V	86.82	20.30	1.45	0.55	21.19	34.77	13.58
710.00	10		H	86.70	19.55	1.45	0.55	20.45	34.77	14.32
710.00			V	84.81	20.19	1.45	0.55	21.08	34.77	13.69

Frequency (MHz)	BW (MHz)	Modulation	Polar (H/V)	Receiver Reading (dBµV)	Substituted Method			Absolute Level EIRP (dBm)	Limit (dBm)	Margin (dB)
					Substituted Level (dBm)	Antenna Gain (dBd/dBi)	Cable Loss (dB)			
713.50	5	QPSK	H	86.37	19.88	1.62	0.60	20.90	34.77	13.87
713.50			V	86.13	20.99	1.62	0.60	22.01	34.77	12.76
711.00	10		H	86.04	20.23	1.62	0.60	21.24	34.77	13.53
711.00			V	85.75	21.11	1.62	0.60	22.13	34.77	12.64
713.50	5	16QAM	H	85.85	19.58	1.62	0.60	20.60	34.77	14.17
713.50			V	86.22	20.89	1.62	0.60	21.91	34.77	12.86
711.00	10		H	86.68	19.60	1.62	0.60	20.62	34.77	14.15
711.00			V	85.13	21.05	1.62	0.60	22.07	34.77	12.70

LTE Band 25

Frequency (MHz)	BW (MHz)	Modulation	Polar (H/V)	Receiver Reading (dBµV)	Substituted Method			Absolute Level EIRP (dBm)	Limit (dBm)	Margin (dB)
					Substituted Level (dBm)	Antenna Gain (dBd/dBi)	Cable Loss (dB)			
1850.70	1.4	QPSK	H	85.45	13.07	10.99	2.11	21.95	33.00	11.05
1850.70			V	85.15	12.21	10.99	2.11	21.08	33.00	11.92
1851.50	3		H	86.46	12.63	10.99	2.11	21.51	33.00	11.49
1851.50			V	85.47	12.24	10.99	2.11	21.11	33.00	11.89
1852.50	5		H	87.07	12.32	10.99	2.11	21.20	33.00	11.80
1852.50			V	86.41	12.85	10.99	2.11	21.73	33.00	11.27
1855.00	10		H	86.29	11.63	10.99	2.11	20.51	33.00	12.49
1855.00			V	84.97	11.70	10.99	2.11	20.57	33.00	12.43
1857.50	15		H	85.18	12.02	10.99	2.11	20.90	33.00	12.10
1857.50			V	85.15	12.46	10.99	2.11	21.33	33.00	11.67
1860.00	20		H	86.52	12.30	10.99	2.11	21.18	33.00	11.82
1860.00			V	86.51	13.30	10.99	2.11	22.17	33.00	10.83
1850.70	1.4	16QAM	H	87.25	11.91	10.99	2.11	20.78	33.00	12.22
1850.70			V	87.10	13.40	10.99	2.11	22.28	33.00	10.72
1851.50	3		H	86.37	13.43	10.99	2.11	22.31	33.00	10.69
1851.50			V	86.45	11.79	10.99	2.11	20.67	33.00	12.33
1852.50	5		H	86.32	13.27	10.99	2.11	22.14	33.00	10.86
1852.50			V	86.50	13.18	10.99	2.11	22.06	33.00	10.94
1855.00	10		H	86.70	12.58	10.99	2.11	21.46	33.00	11.54
1855.00			V	86.04	12.01	10.99	2.11	20.89	33.00	12.11
1857.50	15		H	87.52	11.52	10.99	2.11	20.39	33.00	12.61
1857.50			V	86.28	11.57	10.99	2.11	20.45	33.00	12.55
1860.00	20		H	87.79	12.45	10.99	2.11	21.33	33.00	11.67
1860.00			V	87.30	11.53	10.99	2.11	20.40	33.00	12.60

Frequency (MHz)	BW (MHz)	Modulation	Polar (H/V)	Receiver Reading (dBµV)	Substituted Method			Absolute Level EIRP (dBm)	Limit (dBm)	Margin (dB)
					Substituted Level (dBm)	Antenna Gain (dBd/dBi)	Cable Loss (dB)			
1882.50	1.4	QPSK	H	85.61	11.94	11.87	2.01	21.80	33.00	11.20
1882.50			V	84.52	11.81	11.87	2.01	21.68	33.00	11.32
1882.50	3		H	86.52	11.80	11.87	2.01	21.67	33.00	11.33
1882.50			V	84.75	12.63	11.87	2.01	22.50	33.00	10.50
1882.50	5		H	86.26	13.43	11.87	2.01	23.30	33.00	9.70
1882.50			V	85.52	13.29	11.87	2.01	23.16	33.00	9.84
1882.50	10		H	85.52	13.22	11.87	2.01	23.08	33.00	9.92
1882.50			V	85.97	12.51	11.87	2.01	22.38	33.00	10.62
1882.50	15		H	85.13	13.09	11.87	2.01	22.96	33.00	10.04
1882.50			V	86.52	13.32	11.87	2.01	23.19	33.00	9.81
1882.50	20		H	86.73	12.42	11.87	2.01	22.29	33.00	10.71
1882.50			V	85.55	12.23	11.87	2.01	22.10	33.00	10.90
1882.50	1.4	16QAM	H	86.96	11.95	11.87	2.01	21.82	33.00	11.18
1882.50			V	86.68	13.12	11.87	2.01	22.99	33.00	10.01
1882.50	3		H	86.05	12.11	11.87	2.01	21.97	33.00	11.03
1882.50			V	86.15	13.13	11.87	2.01	23.00	33.00	10.00
1882.50	5		H	86.36	12.20	11.87	2.01	22.07	33.00	10.93
1882.50			V	86.40	12.25	11.87	2.01	22.12	33.00	10.88
1882.50	10		H	86.67	13.18	11.87	2.01	23.05	33.00	9.95
1882.50			V	86.19	11.82	11.87	2.01	21.68	33.00	11.32
1882.50	15		H	86.59	12.22	11.87	2.01	22.09	33.00	10.91
1882.50			V	87.58	12.18	11.87	2.01	22.05	33.00	10.95
1882.50	20		H	87.25	12.51	11.87	2.01	22.38	33.00	10.62
1882.50			V	87.46	12.13	11.87	2.01	22.00	33.00	11.00

Frequency (MHz)	BW (MHz)	Modulation	Polar (H/V)	Receiver Reading (dBµV)	Substituted Method			Absolute Level EIRP (dBm)	Limit (dBm)	Margin (dB)
					Substituted Level (dBm)	Antenna Gain (dBd/dBi)	Cable Loss (dB)			
1914.30	1.4	QPSK	H	85.96	12.08	11.87	2.49	21.45	33.00	11.55
1914.30			V	85.37	12.29	11.87	2.49	21.66	33.00	11.34
1913.50	3		H	85.43	11.72	11.87	2.49	21.10	33.00	11.90
1913.50			V	85.42	12.80	11.87	2.49	22.17	33.00	10.83
1912.50	5		H	86.19	12.83	11.87	2.49	22.20	33.00	10.80
1912.50			V	86.88	11.54	11.87	2.49	20.91	33.00	12.09
1910.00	10		H	85.36	12.66	11.87	2.49	22.03	33.00	10.97
1910.00			V	84.60	11.98	11.87	2.49	21.35	33.00	11.65
1907.50	15		H	85.37	13.34	11.87	2.49	22.71	33.00	10.29
1907.50			V	85.40	13.10	11.87	2.49	22.48	33.00	10.52
1905.00	20		H	85.34	12.41	11.87	2.49	21.79	33.00	11.21
1905.00			V	86.91	11.60	11.87	2.49	20.98	33.00	12.02
1914.30	1.4	16QAM	H	87.19	12.95	11.87	2.49	22.32	33.00	10.68
1914.30			V	85.75	13.16	11.87	2.49	22.54	33.00	10.46
1913.50	3		H	85.86	11.91	11.87	2.49	21.28	33.00	11.72
1913.50			V	86.33	11.51	11.87	2.49	20.88	33.00	12.12
1912.50	5		H	86.50	11.76	11.87	2.49	21.13	33.00	11.87
1912.50			V	86.04	11.52	11.87	2.49	20.90	33.00	12.10
1910.00	10		H	87.47	12.13	11.87	2.49	21.50	33.00	11.50
1910.00			V	86.90	11.99	11.87	2.49	21.36	33.00	11.64
1907.50	15		H	85.90	13.34	11.87	2.49	22.71	33.00	10.29
1907.50			V	86.67	13.33	11.87	2.49	22.70	33.00	10.30
1905.00	20		H	86.99	12.61	11.87	2.49	21.98	33.00	11.02
1905.00			V	87.80	11.95	11.87	2.49	21.32	33.00	11.68

LTE Band 26(814-824MHz)

Frequency (MHz)	BW (MHz)	Modulation	Polar (H/V)	Receiver Reading (dBμV)	Substituted Method			Absolute Level ERP (dBm)	Limit (dBm)	Margin (dB)
					Substituted Level (dBm)	Antenna Gain (dBd/dBi)	Cable Loss (dB)			
814.70	1.4	QPSK	H	86.10	19.25	1.67	0.24	20.68	50.00	29.32
814.70			V	85.71	19.27	1.67	0.24	20.71	50.00	29.29
815.50	3		H	85.75	19.64	1.67	0.24	21.07	50.00	28.93
815.50			V	84.80	19.34	1.67	0.24	20.77	50.00	29.23
816.50	5		H	86.60	20.96	1.67	0.24	22.40	50.00	27.60
816.50			V	85.96	20.07	1.67	0.24	21.50	50.00	28.50
819.00	10		H	86.86	19.76	1.67	0.24	21.20	50.00	28.80
819.00			V	84.98	19.74	1.67	0.24	21.17	50.00	28.83
814.70	1.4	16QAM	H	86.76	21.02	1.67	0.24	22.45	50.00	27.55
814.70			V	85.85	20.58	1.67	0.24	22.01	50.00	27.99
815.50	3		H	86.10	20.20	1.67	0.24	21.64	50.00	28.36
815.50			V	86.73	20.70	1.67	0.24	22.13	50.00	27.87
816.50	5		H	86.78	21.10	1.67	0.24	22.53	50.00	27.47
816.50			V	86.80	20.06	1.67	0.24	21.50	50.00	28.50
819.00	10		H	85.96	19.79	1.67	0.24	21.23	50.00	28.77
819.00			V	87.31	19.63	1.67	0.24	21.06	50.00	28.94

Frequency (MHz)	BW (MHz)	Modulation	Polar (H/V)	Receiver Reading (dBμV)	Substituted Method			Absolute Level ERP (dBm)	Limit (dBm)	Margin (dB)
					Substituted Level (dBm)	Antenna Gain (dBd/dBi)	Cable Loss (dB)			
819.00	1.4	QPSK	H	86.09	19.81	1.51	0.57	20.75	50.00	29.25
819.00			V	85.33	20.12	1.51	0.57	21.06	50.00	28.94
819.00	3		H	86.45	20.05	1.51	0.57	20.99	50.00	29.01
819.00			V	84.84	20.44	1.51	0.57	21.38	50.00	28.62
819.00	5		H	87.22	20.65	1.51	0.57	21.59	50.00	28.41
819.00			V	85.93	19.94	1.51	0.57	20.88	50.00	29.12
819.00	10		H	87.20	19.65	1.51	0.57	20.59	50.00	29.41
819.00			V	86.18	20.08	1.51	0.57	21.02	50.00	28.98
819.00	1.4	16QAM	H	85.94	20.72	1.51	0.57	21.66	50.00	28.34
819.00			V	86.70	20.29	1.51	0.57	21.23	50.00	28.77
819.00	3		H	86.61	20.54	1.51	0.57	21.48	50.00	28.52
819.00			V	85.68	19.91	1.51	0.57	20.85	50.00	29.15
819.00	5		H	85.77	19.77	1.51	0.57	20.71	50.00	29.29
819.00			V	86.84	20.10	1.51	0.57	21.04	50.00	28.96
819.00	10		H	87.36	20.55	1.51	0.57	21.49	50.00	28.51
819.00			V	85.44	20.62	1.51	0.57	21.56	50.00	28.44

Frequency (MHz)	BW (MHz)	Modulation	Polar (H/V)	Receiver Reading (dBμV)	Substituted Method			Absolute Level ERP (dBm)	Limit (dBm)	Margin (dB)
					Substituted Level (dBm)	Antenna Gain (dBd/dBi)	Cable Loss (dB)			
823.30	1.4	QPSK	H	85.99	21.04	1.67	0.50	22.20	50.00	27.80
823.30			V	84.81	19.96	1.67	0.50	21.13	50.00	28.87
822.50	3		H	86.96	19.64	1.67	0.50	20.80	50.00	29.20
822.50			V	85.46	21.09	1.67	0.50	22.25	50.00	27.75
821.50	5		H	86.60	19.31	1.67	0.50	20.48	50.00	29.52
821.50			V	85.53	20.74	1.67	0.50	21.91	50.00	28.09
819.00	10		H	85.35	20.97	1.67	0.50	22.13	50.00	27.87
819.00			V	85.01	20.73	1.67	0.50	21.89	50.00	28.11
823.30	1.4	16QAM	H	86.92	20.00	1.67	0.50	21.16	50.00	28.84
823.30			V	86.91	19.46	1.67	0.50	20.63	50.00	29.37
822.50	3		H	87.04	19.35	1.67	0.50	20.51	50.00	29.49
822.50			V	86.56	21.11	1.67	0.50	22.28	50.00	27.72
821.50	5		H	85.47	20.81	1.67	0.50	21.97	50.00	28.03
821.50			V	86.85	19.42	1.67	0.50	20.59	50.00	29.41
819.00	10		H	87.09	19.87	1.67	0.50	21.03	50.00	28.97
819.00			V	85.45	21.08	1.67	0.50	22.24	50.00	27.76

LTE Band 26(824-849MHz)

Frequency (MHz)	BW (MHz)	Modulation	Polar (H/V)	Receiver Reading (dBμV)	Substituted Method			Absolute Level ERP (dBm)	Limit (dBm)	Margin (dB)
					Substituted Level (dBm)	Antenna Gain (dBd/dBi)	Cable Loss (dB)			
824.70	1.4	QPSK	H	84.80	19.85	1.30	0.28	20.86	38.45	17.59
824.70			V	85.08	20.66	1.30	0.28	21.67	38.45	16.78
825.50	3		H	85.29	20.29	1.30	0.28	21.30	38.45	17.15
825.50			V	85.61	20.12	1.30	0.28	21.13	38.45	17.32
826.50	5		H	87.32	20.24	1.30	0.28	21.25	38.45	17.20
826.50			V	85.54	21.18	1.30	0.28	22.19	38.45	16.26
829.00	10		H	85.71	20.58	1.30	0.28	21.59	38.45	16.86
829.00			V	85.78	19.65	1.30	0.28	20.67	38.45	17.78
831.50	15		H	85.37	20.71	1.30	0.28	21.72	38.45	16.73
831.50			V	86.60	20.73	1.30	0.28	21.74	38.45	16.71
824.70	1.4	16QAM	H	86.47	20.02	1.30	0.28	21.03	38.45	17.42
824.70			V	85.89	21.26	1.30	0.28	22.28	38.45	16.17
825.50	3		H	86.28	20.36	1.30	0.28	21.37	38.45	17.08
825.50			V	86.49	21.26	1.30	0.28	22.27	38.45	16.18
826.50	5		H	85.68	20.47	1.30	0.28	21.48	38.45	16.97
826.50			V	85.63	21.18	1.30	0.28	22.19	38.45	16.26
829.00	10		H	87.35	21.35	1.30	0.28	22.36	38.45	16.09
829.00			V	85.87	20.83	1.30	0.28	21.84	38.45	16.61
831.50	15		H	85.64	19.73	1.30	0.28	20.75	38.45	17.70
831.50			V	86.11	20.96	1.30	0.28	21.97	38.45	16.48

Frequency (MHz)	BW (MHz)	Modulation	Polar (H/V)	Receiver Reading (dBμV)	Substituted Method			Absolute Level ERP (dBm)	Limit (dBm)	Margin (dB)
					Substituted Level (dBm)	Antenna Gain (dBd/dBi)	Cable Loss (dB)			
836.50	1.4	QPSK	H	85.06	21.14	1.17	0.48	21.83	38.45	16.62
836.50			V	85.61	20.18	1.17	0.48	20.87	38.45	17.58
836.50	3		H	85.05	19.87	1.17	0.48	20.56	38.45	17.89
836.50			V	84.43	21.46	1.17	0.48	22.16	38.45	16.29
836.50	5		H	85.90	20.94	1.17	0.48	21.64	38.45	16.81
836.50			V	87.01	19.94	1.17	0.48	20.63	38.45	17.82
836.50	10		H	85.85	20.57	1.17	0.48	21.26	38.45	17.19
836.50			V	86.22	19.70	1.17	0.48	20.40	38.45	18.05
836.50	15		H	86.08	20.55	1.17	0.48	21.24	38.45	17.21
1882.50			V	85.87	19.71	1.17	0.48	20.40	38.45	18.05
836.50	1.4	16QAM	H	86.41	20.64	1.17	0.48	21.34	38.45	17.11
836.50			V	86.51	20.60	1.17	0.48	21.30	38.45	17.15
836.50	3		H	86.83	20.61	1.17	0.48	21.30	38.45	17.15
836.50			V	87.32	20.66	1.17	0.48	21.35	38.45	17.10
836.50	5		H	85.62	19.76	1.17	0.48	20.45	38.45	18.00
836.50			V	86.85	20.85	1.17	0.48	21.54	38.45	16.91
836.50	10		H	86.36	21.32	1.17	0.48	22.02	38.45	16.43
836.50			V	86.12	19.66	1.17	0.48	20.35	38.45	18.10
836.50	15		H	86.22	20.32	1.17	0.48	21.01	38.45	17.44
836.50			V	87.02	21.16	1.17	0.48	21.86	38.45	16.59

Frequency (MHz)	BW (MHz)	Modulation	Polar (H/V)	Receiver Reading (dBμV)	Substituted Method			Absolute Level ERP (dBm)	Limit (dBm)	Margin (dB)
					Substituted Level (dBm)	Antenna Gain (dBd/dBi)	Cable Loss (dB)			
848.30	1.4	QPSK	H	86.03	20.84	1.32	0.59	21.57	38.45	16.88
848.30			V	85.45	19.81	1.32	0.59	20.54	38.45	17.91
847.50	3		H	86.76	20.38	1.32	0.59	21.11	38.45	17.34
847.50			V	85.09	21.11	1.32	0.59	21.84	38.45	16.61
846.50	5		H	87.69	21.52	1.32	0.59	22.25	38.45	16.20
846.50			V	85.91	20.27	1.32	0.59	21.00	38.45	17.45
844.00	10		H	86.31	19.77	1.32	0.59	20.50	38.45	17.95
844.00			V	84.83	20.44	1.32	0.59	21.17	38.45	17.28
841.50	15		H	86.62	19.76	1.32	0.59	20.49	38.45	17.96
841.50			V	86.18	20.39	1.32	0.59	21.12	38.45	17.33
848.30	1.4	16QAM	H	86.02	19.88	1.32	0.59	20.61	38.45	17.84
848.30			V	85.85	19.61	1.32	0.59	20.34	38.45	18.11
847.50	3		H	86.16	20.41	1.32	0.59	21.13	38.45	17.32
847.50			V	87.24	20.38	1.32	0.59	21.11	38.45	17.34
846.50	5		H	86.68	21.08	1.32	0.59	21.81	38.45	16.64
846.50			V	86.02	21.41	1.32	0.59	22.14	38.45	16.31
844.00	10		H	86.98	19.76	1.32	0.59	20.49	38.45	17.96
844.00			V	87.44	21.09	1.32	0.59	21.82	38.45	16.63
841.50	15		H	86.42	21.42	1.32	0.59	22.15	38.45	16.30
841.50			V	86.40	19.92	1.32	0.59	20.65	38.45	17.80

LTE Band 41

Frequency (MHz)	BW (MHz)	Modulation	Polar (H/V)	Receiver Reading (dBμV)	Substituted Method			Absolute Level EIRP (dBm)	Limit (dBm)	Margin (dB)
					Substituted Level (dBm)	Antenna Gain (dBd/dBi)	Cable Loss (dB)			
2498.50	5	QPSK	H	84.89	12.41	11.01	1.83	21.59	33.00	11.41
2495.50			V	85.21	12.74	11.01	1.83	21.92	33.00	11.08
2501.00	10		H	85.57	11.53	11.01	1.83	20.71	33.00	12.29
2501.00			V	85.90	12.25	11.01	1.83	21.43	33.00	11.57
2503.50	15		H	86.71	13.09	11.01	1.83	22.27	33.00	10.73
2503.50			V	87.37	12.05	11.01	1.83	21.23	33.00	11.77
2506.00	20		H	85.59	11.72	11.01	1.83	20.90	33.00	12.10
2506.00			V	84.41	12.73	11.01	1.83	21.91	33.00	11.09
2498.50	5	16QAM	H	86.70	12.35	11.01	1.83	21.53	33.00	11.47
2495.50			V	86.18	11.84	11.01	1.83	21.02	33.00	11.98
2501.00	10		H	86.09	13.08	11.01	1.83	22.26	33.00	10.74
2501.00			V	87.00	12.74	11.01	1.83	21.92	33.00	11.08
2503.50	15		H	85.45	13.36	11.01	1.83	22.54	33.00	10.46
2503.50			V	86.06	13.31	11.01	1.83	22.49	33.00	10.51
2506.00	20		H	86.10	12.10	11.01	1.83	21.28	33.00	11.72
2506.00			V	86.05	12.09	11.01	1.83	21.27	33.00	11.73

Frequency (MHz)	BW (MHz)	Modulation	Polar (H/V)	Receiver Reading (dBμV)	Substituted Method			Absolute Level EIRP (dBm)	Limit (dBm)	Margin (dB)
					Substituted Level (dBm)	Antenna Gain (dBd/dBi)	Cable Loss (dB)			
2593.00	5	QPSK	H	84.87	12.34	11.42	2.11	21.66	33.00	11.34
2593.00			V	85.39	12.10	11.42	2.11	21.41	33.00	11.59
2593.00	10		H	85.39	13.24	11.42	2.11	22.56	33.00	10.44
2593.00			V	84.89	12.46	11.42	2.11	21.77	33.00	11.23
2593.00	15		H	86.68	12.24	11.42	2.11	21.55	33.00	11.45
2593.00			V	86.21	13.36	11.42	2.11	22.67	33.00	10.33
2593.00	20		H	85.41	13.33	11.42	2.11	22.65	33.00	10.35
2593.00			V	84.75	11.91	11.42	2.11	21.22	33.00	11.78
2593.00	5	16QAM	H	86.10	12.79	11.42	2.11	22.10	33.00	10.90
2593.00			V	86.50	12.72	11.42	2.11	22.04	33.00	10.96
2593.00	10		H	87.15	12.10	11.42	2.11	21.41	33.00	11.59
2593.00			V	86.10	12.28	11.42	2.11	21.59	33.00	11.41
2593.00	15		H	85.37	12.07	11.42	2.11	21.38	33.00	11.62
2593.00			V	86.04	13.40	11.42	2.11	22.71	33.00	10.29
2593.00	20		H	85.85	12.97	11.42	2.11	22.29	33.00	10.71
2593.00			V	87.16	12.02	11.42	2.11	21.34	33.00	11.66

Frequency (MHz)	BW (MHz)	Modulation	Polar (H/V)	Receiver Reading (dBμV)	Substituted Method			Absolute Level EIRP (dBm)	Limit (dBm)	Margin (dB)
					Substituted Level (dBm)	Antenna Gain (dBd/dBi)	Cable Loss (dB)			
2687.50	5	QPSK	H	84.70	11.53	11.95	2.20	21.28	33.00	11.72
2687.50			V	84.55	12.76	11.95	2.20	22.51	33.00	10.49
2685.00	10		H	85.58	12.75	11.95	2.20	22.50	33.00	10.50
2685.00			V	85.54	13.16	11.95	2.20	22.91	33.00	10.09
2682.50	15		H	87.04	12.09	11.95	2.20	21.84	33.00	11.16
2682.50			V	85.43	11.82	11.95	2.20	21.56	33.00	11.44
2680.00	20		H	85.33	13.15	11.95	2.20	22.90	33.00	10.10
2680.00			V	84.27	12.27	11.95	2.20	22.01	33.00	10.99
2687.50	5	16QAM	H	85.67	11.83	11.95	2.20	21.58	33.00	11.42
2687.50			V	85.88	12.94	11.95	2.20	22.68	33.00	10.32
2685.00	10		H	85.39	12.86	11.95	2.20	22.61	33.00	10.39
2685.00			V	86.42	13.31	11.95	2.20	23.06	33.00	9.94
2682.50	15		H	85.52	11.86	11.95	2.20	21.61	33.00	11.39
2682.50			V	86.37	13.47	11.95	2.20	23.22	33.00	9.78
2680.00	20		H	87.01	12.55	11.95	2.20	22.30	33.00	10.70
2680.00			V	86.05	11.99	11.95	2.20	21.74	33.00	11.26

LTE Band 66

Frequency (MHz)	BW (MHz)	Modulation	Polar (H/V)	Receiver Reading (dBµV)	Substituted Method			Absolute Level EIRP (dBm)	Limit (dBm)	Margin (dB)
					Substituted Level (dBm)	Antenna Gain (dBd/dBi)	Cable Loss (dB)			
1710.70	1.4	QPSK	H	86.06	12.59	11.02	1.78	21.83	33.00	11.17
1710.70			V	84.60	12.17	11.02	1.78	21.41	33.00	11.59
1711.50	3		H	86.92	11.57	11.02	1.78	20.81	33.00	12.19
1711.50			V	85.99	13.28	11.02	1.78	22.52	33.00	10.48
1712.50	5		H	87.19	11.58	11.02	1.78	20.82	33.00	12.18
1712.70			V	86.14	13.36	11.02	1.78	22.60	33.00	10.40
1715.00	10		H	86.55	13.29	11.02	1.78	22.53	33.00	10.47
1715.00			V	84.68	13.10	11.02	1.78	22.34	33.00	10.66
1717.50	15		H	86.27	11.69	11.02	1.78	20.93	33.00	12.07
1717.50			V	85.77	13.08	11.02	1.78	22.32	33.00	10.68
1720.00	20		H	86.37	13.35	11.02	1.78	22.59	33.00	10.41
1720.00			V	87.15	12.00	11.02	1.78	21.24	33.00	11.76
1710.70	1.4	16QAM	H	86.61	13.27	11.02	1.78	22.51	33.00	10.49
1710.70			V	86.72	13.46	11.02	1.78	22.70	33.00	10.30
1711.50	3		H	86.26	13.12	11.02	1.78	22.36	33.00	10.64
1711.50			V	86.03	11.78	11.02	1.78	21.03	33.00	11.97
1712.50	5		H	87.19	12.83	11.02	1.78	22.07	33.00	10.93
1712.70			V	86.91	13.28	11.02	1.78	22.52	33.00	10.48
1715.00	10		H	86.39	13.06	11.02	1.78	22.31	33.00	10.69
1715.00			V	86.00	12.34	11.02	1.78	21.58	33.00	11.42
1717.50	15		H	87.29	12.67	11.02	1.78	21.91	33.00	11.09
1717.50			V	87.05	11.87	11.02	1.78	21.11	33.00	11.89
1720.00	20		H	86.48	11.87	11.02	1.78	21.11	33.00	11.89
1720.00			V	86.47	12.60	11.02	1.78	21.84	33.00	11.16

Frequency (MHz)	BW (MHz)	Modulation	Polar (H/V)	Receiver Reading (dBµV)	Substituted Method			Absolute Level EIRP (dBm)	Limit (dBm)	Margin (dB)
					Substituted Level (dBm)	Antenna Gain (dBd/dBi)	Cable Loss (dB)			
1745.00	1.4	QPSK	H	85.38	13.09	10.98	2.54	21.52	33.00	11.48
1745.00			V	84.67	11.60	10.98	2.54	20.03	33.00	12.97
1745.00	3		H	86.37	12.82	10.98	2.54	21.26	33.00	11.74
1745.00			V	85.67	13.05	10.98	2.54	21.48	33.00	11.52
1745.00	5		H	87.54	12.71	10.98	2.54	21.15	33.00	11.85
1745.00			V	85.61	13.25	10.98	2.54	21.69	33.00	11.31
1745.00	10		H	85.93	13.44	10.98	2.54	21.87	33.00	11.13
1745.00			V	84.93	12.38	10.98	2.54	20.81	33.00	12.19
1745.00	15		H	86.36	12.26	10.98	2.54	20.69	33.00	12.31
1745.00			V	85.13	11.98	10.98	2.54	20.42	33.00	12.58
1745.00	20		H	85.91	12.94	10.98	2.54	21.38	33.00	11.62
1745.00			V	86.18	12.57	10.98	2.54	21.00	33.00	12.00
1745.00	1.4	16QAM	H	85.58	13.41	10.98	2.54	21.85	33.00	11.15
1745.00			V	86.15	11.87	10.98	2.54	20.30	33.00	12.70
1745.00	3		H	86.37	12.42	10.98	2.54	20.86	33.00	12.14
1745.00			V	86.34	12.66	10.98	2.54	21.10	33.00	11.90
1745.00	5		H	87.03	12.72	10.98	2.54	21.16	33.00	11.84
1745.00			V	86.09	12.32	10.98	2.54	20.75	33.00	12.25
1745.00	10		H	85.81	11.84	10.98	2.54	20.28	33.00	12.72
1745.00			V	86.66	12.11	10.98	2.54	20.54	33.00	12.46
1745.00	15		H	87.04	11.81	10.98	2.54	20.25	33.00	12.75
1745.00			V	87.21	12.70	10.98	2.54	21.14	33.00	11.86
1745.00	20		H	85.95	12.18	10.98	2.54	20.61	33.00	12.39
1745.00			V	87.27	12.14	10.98	2.54	20.58	33.00	12.42

Frequency (MHz)	BW (MHz)	Modulation	Polar (H/V)	Receiver Reading (dBμV)	Substituted Method			Absolute Level EIRP (dBm)	Limit (dBm)	Margin (dB)
					Substituted Level (dBm)	Antenna Gain (dBd/dBi)	Cable Loss (dB)			
1779.30	1.4	QPSK	H	85.42	12.11	11.51	2.61	21.00	33.00	12.00
1779.30			V	84.77	12.57	11.51	2.61	21.46	33.00	11.54
1778.50	3		H	86.87	12.56	11.51	2.61	21.45	33.00	11.55
1778.50			V	85.61	12.65	11.51	2.61	21.54	33.00	11.46
1777.50	5		H	86.47	12.04	11.51	2.61	20.93	33.00	12.07
1777.50			V	86.95	12.18	11.51	2.61	21.07	33.00	11.93
1775.00	10		H	85.69	11.54	11.51	2.61	20.43	33.00	12.57
1775.00			V	85.89	11.83	11.51	2.61	20.72	33.00	12.28
1772.50	15		H	86.68	13.03	11.51	2.61	21.92	33.00	11.08
1772.50			V	86.84	12.88	11.51	2.61	21.78	33.00	11.22
1770.00	20		H	85.68	13.03	11.51	2.61	21.92	33.00	11.08
1770.00			V	86.22	13.29	11.51	2.61	22.18	33.00	10.82
1779.30	1.4	16QAM	H	85.61	12.47	11.51	2.61	21.36	33.00	11.64
1779.30			V	85.86	13.04	11.51	2.61	21.93	33.00	11.07
1778.50	3		H	86.61	11.71	11.51	2.61	20.60	33.00	12.40
1778.50			V	85.65	11.74	11.51	2.61	20.63	33.00	12.37
1777.50	5		H	85.81	11.54	11.51	2.61	20.43	33.00	12.57
1777.50			V	87.17	11.91	11.51	2.61	20.80	33.00	12.20
1775.00	10		H	86.66	11.56	11.51	2.61	20.45	33.00	12.55
1775.00			V	87.59	12.50	11.51	2.61	21.40	33.00	11.60
1772.50	15		H	87.40	12.27	11.51	2.61	21.16	33.00	11.84
1772.50			V	87.18	12.27	11.51	2.61	21.16	33.00	11.84
1770.00	20		H	86.71	11.93	11.51	2.61	20.82	33.00	12.18
1770.00			V	87.23	11.59	11.51	2.61	20.48	33.00	12.52

NOTE:We measured all modes and only recorded the worst case.

4.2 Peak-to-Average Ratio (PAR)

LIMIT

The Peak-to-Average Ratio (PAR) of the transmission may not exceed 13 dB.

TEST CONFIGURATION

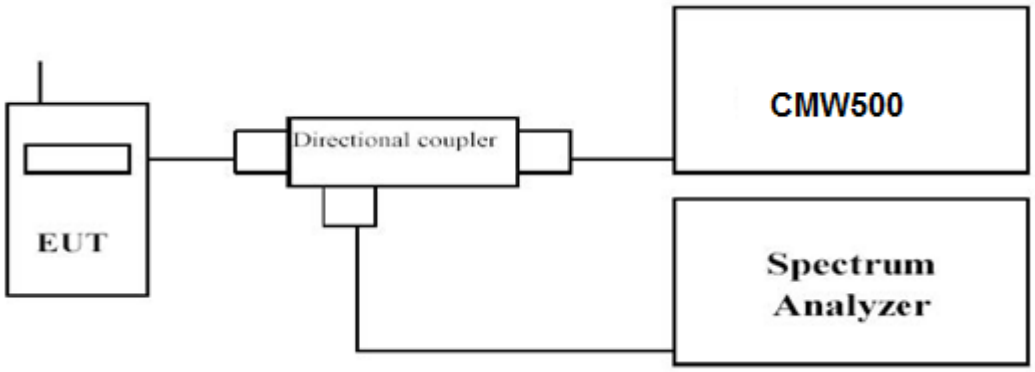

TEST PROCEDURE

1. Refer to instrument's analyzer instruction manual for details on how to use the power statistics/CCDF function;
2. Set resolution/measurement bandwidth ≥ signal's occupied bandwidth;
3. Set the number of counts to a value that stabilizes the measured CCDF curve;
4. Set the measurement interval as follows:
   1). for continuous transmissions, set to 1 ms,
   2). for burst transmissions, employ an external trigger that is synchronized with the EUT burst tN/Ag sequence, or use the internal burst trigger with a trigger level that allows the burst to stabilize and set the measurement interval to a time that is less than or equal to the burst duration.
5. Record the maximum PAPR level associated with a probability of 0.1%.

TEST RESULTS

Temperature	24.5℃	Humidity	53.7%
Test Engineer	Lushan Kong	Configurations	LTE

Remark:
We were tested all RB Configuration refer 3GPP TS136 521 for each Channel Bandwidth of LTE FDD Band 2, LTE FDD Band 4, LTE FDD Band 5, LTE FDD Band 7, LTE FDD Band 12, LTE FDD Band 14, LTE FDD Band 17, LTE FDD Band 25, LTE FDD Band 26, LTE TDD Band 41, LTE FDD Band 66 ; recorded worst case for each Channel Bandwidth of LTE FDD Band 2, LTE FDD Band 4, LTE FDD Band 5, LTE FDD Band 7, LTE FDD Band 12, LTE FDD Band 14, LTE FDD Band 17, LTE FDD Band 25, LTE FDD Band 26, LTE TDD Band 41, LTE FDD Band 66;

1.For E-UTRA Band 2, please refer to Appendix Band 2: Section B;
2.For E-UTRA Band 4, please refer to Appendix Band 4: Section B;
3.For E-UTRA Band 5, please refer to Appendix Band 5: Section B;
4.For E-UTRA Band 7, please refer to Appendix Band 7: Section B;
5.For E-UTRA Band 12, please refer to Appendix Band 12: Section B;
6.For E-UTRA Band 14, please refer to Appendix Band 14: Section B;
7.For E-UTRA Band 17, please refer to Appendix Band 17: Section B;
8.For E-UTRA Band 25, please refer to Appendix Band 25: Section B;
9.For E-UTRA Band 26(814 MHz -824MHz), please refer to Appendix Band 26(814 MHz -824MHz): Section B;
10.For E-UTRA Band 26(824 MHz -849MHz), please refer to Appendix Band 26(824 MHz -849MHz): Section B;
11.For E-UTRA Band 41, please refer to Appendix Band 41: Section B;
12.For E-UTRA Band 66, please refer to Appendix Band 66: Section B;
NOTE:We measured all modes and only recorded the worst case.

4.3 Occupied Bandwidth and Emission Bandwidth

LIMIT

FCC §2.1049, §22.917, §22.905, §24.238, §27.53 and §90.209

TEST CONFIGURATION

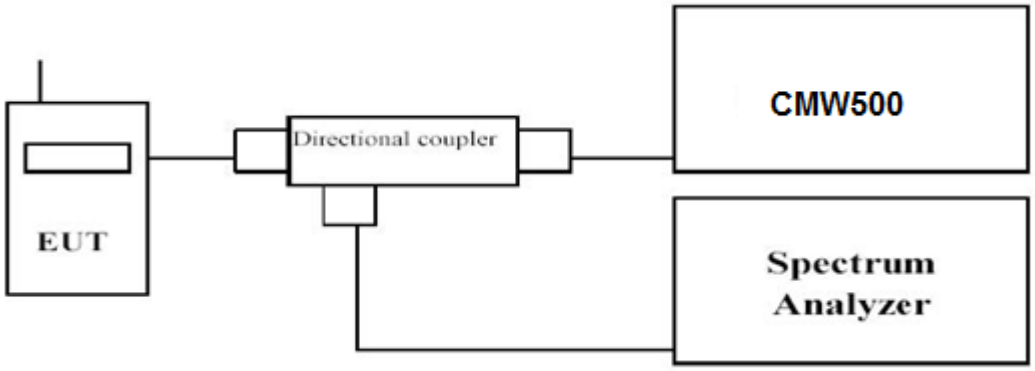

TEST PROCEDURE

The transmitter output was connected to a calibrated coaxial cable and coupler, the other end of which was connected to a spectrum analyzer. The occupied bandwidth was measured with the spectrum analyzer at low, middle and high channel in each band. The -26dBc Emission bandwidth was also measured and recorded.
Set RBW was set to about 1% of emission BW, VBW≥3 times RBW.
-26dBc display line was placed on the screen (or 99% bandwidth), the occupied bandwidth is the delta frequency between the two points where the display line intersects the signal trace.

TEST RESULTS

Temperature	24.5℃	Humidity	53.7%
Test Engineer	Lushan Kong	Configurations	LTE

Remark:
We were tested all RB Configuration refer 3GPP TS136 521 for each Channel Bandwidth of LTE FDD Band 2, LTE FDD Band 4, LTE FDD Band 5, LTE FDD Band 7, LTE FDD Band 12, LTE FDD Band 14, LTE FDD Band 17, LTE FDD Band 25, LTE FDD Band 26, LTE TDD Band 41, LTE FDD Band 66 ; recorded worst case for each Channel Bandwidth of LTE FDD Band 2, LTE FDD Band 4, LTE FDD Band 5, LTE FDD Band 7, LTE FDD Band 12, LTE FDD Band 14, LTE FDD Band 17, LTE FDD Band 25, LTE FDD Band 26, LTE TDD Band 41, LTE FDD Band 66;

1.For E-UTRA Band 2, please refer to Appendix Band 2: Section C;
2.For E-UTRA Band 4, please refer to Appendix Band 4: Section C;
3.For E-UTRA Band 5, please refer to Appendix Band 5: Section C;
4.For E-UTRA Band 7, please refer to Appendix Band 7: Section C;
5.For E-UTRA Band 12, please refer to Appendix Band 12: Section C;
6.For E-UTRA Band 14, please refer to Appendix Band 14: Section C;
7.For E-UTRA Band 17, please refer to Appendix Band 17: Section C;
8.For E-UTRA Band 25, please refer to Appendix Band 25: Section C;
9.For E-UTRA Band 26(814 MHz -824MHz), please refer to Appendix Band 26(814 MHz -824MHz): Section C;
10.For E-UTRA Band 26(824 MHz -849MHz), please refer to Appendix Band 26(824 MHz -849MHz): Section C;
11.For E-UTRA Band 41, please refer to Appendix Band 41: Section C;
12.For E-UTRA Band 66, please refer to Appendix Band 66: Section C;

NOTE:We measured all modes and only recorded the worst case.

4.4 Band Edge compliance

LIMIT

FCC § 2.1053, §22.917, § 24.238 and § 27.53& §90.691.

TEST CONFIGURATION

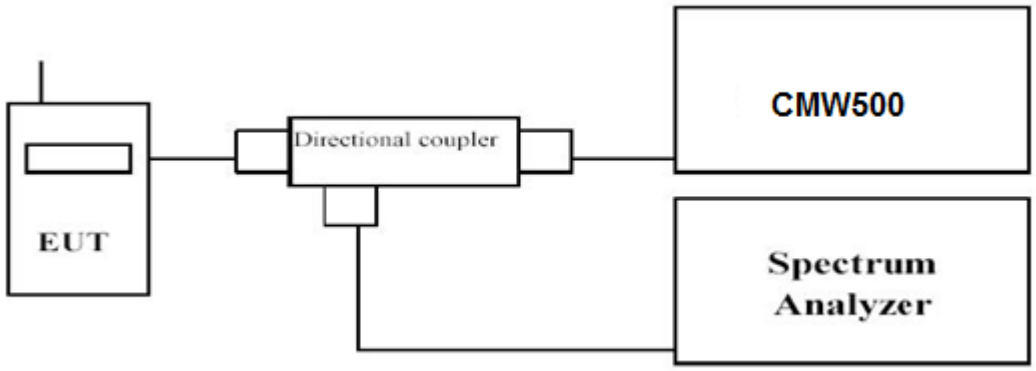

TEST PROCEDURE

1. The transmitter output port was connected to base station.
2. The RF output of EUT was connected to the power meter by RF cable and attenuator, the path loss was compensated to the results for each measurement.
3. Set EUT at maximum power through base station.
4. Select lowest and highest channels for each band and different modulation.
5. Measure Band edge using RMS (Average) detector by spectrum

TEST RESULTS

Temperature	24.5℃	Humidity	53.7%
Test Engineer	Lushan Kong	Configurations	LTE

Remark:

We were tested all RB Configuration refer 3GPP TS136 521 for each Channel Bandwidth of LTE FDD Band 2, LTE FDD Band 4, LTE FDD Band 5, LTE FDD Band 7, LTE FDD Band 12, LTE FDD Band 14, LTE FDD Band 17, LTE FDD Band 25, LTE FDD Band 26, LTE TDD Band 41, LTE FDD Band 66 ; recorded worst case for each Channel Bandwidth of LTE FDD Band 2, LTE FDD Band 4, LTE FDD Band 5, LTE FDD Band 7, LTE FDD Band 12, LTE FDD Band 14, LTE FDD Band 17, LTE FDD Band 25, LTE FDD Band 26, LTE TDD Band 41, LTE FDD Band 66;

1.For E-UTRA Band 2, please refer to Appendix Band 2: Section D;
2.For E-UTRA Band 4, please refer to Appendix Band 4: Section D;
3.For E-UTRA Band 5, please refer to Appendix Band 5: Section D;
4.For E-UTRA Band 7, please refer to Appendix Band 7: Section D;
5.For E-UTRA Band 12, please refer to Appendix Band 12: Section D;
6.For E-UTRA Band 14, please refer to Appendix Band 14: Section D;
7.For E-UTRA Band 17, please refer to Appendix Band 17: Section D;
8.For E-UTRA Band 25, please refer to Appendix Band 25: Section D;
9.For E-UTRA Band 26(814 MHz -824MHz), please refer to Appendix Band 26(814 MHz -824MHz): Section D;
10.For E-UTRA Band 26(824 MHz -849MHz), please refer to Appendix Band 26(824 MHz -849MHz): Section D;
11.For E-UTRA Band 41, please refer to Appendix Band 41: Section D;
12.For E-UTRA Band 66, please refer to Appendix Band 66: Section D;

NOTE:We measured all modes and only recorded the worst case.

4.5 Spurious Emission

LIMIT

FCC § 2.1053, §22.917, § 24.238 and § 27.53&§90.691.

TEST CONFIGURATION

Conducted Spurious Measurement:

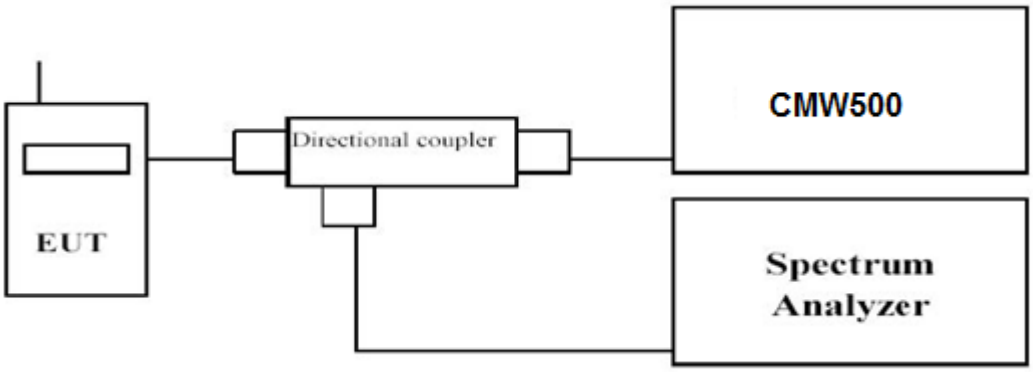

Radiated Spurious Measurement:

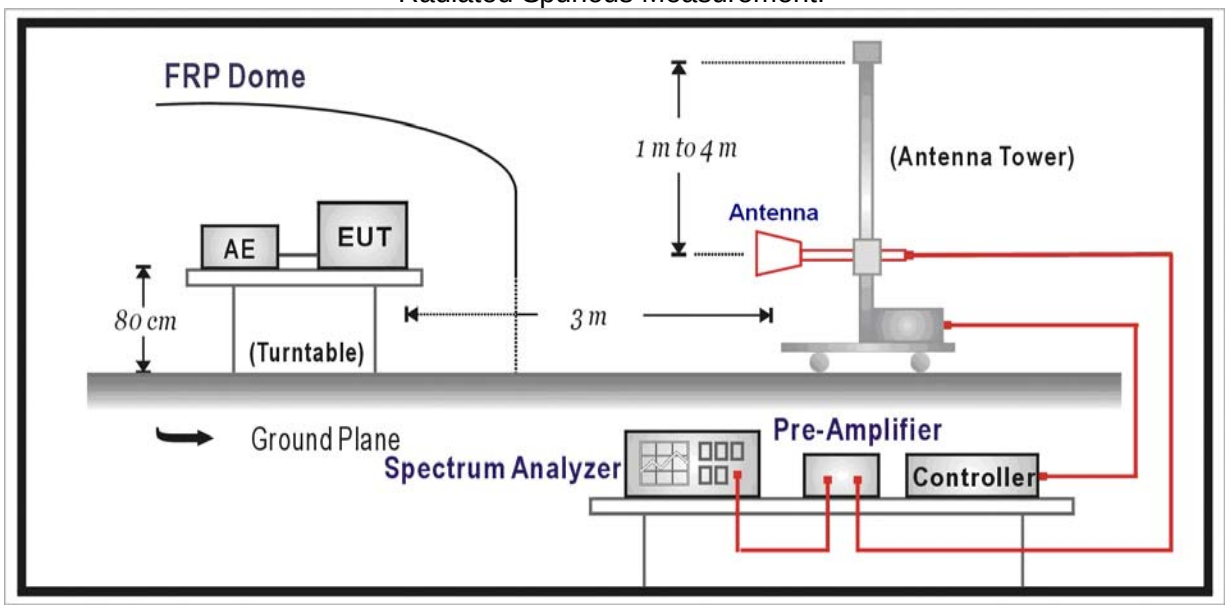

TEST PROCEDURE

The EUT was setup according to EIA/TIA 603-E

Conducted Spurious Measurement:

a. Place the EUT on a bench and set it in transmitting mode.
b. Connect a low loss RF cable from the antenna port to a spectrum analyzer and CMW500 by a Directional Couple.
c. EUT Communicate with CMW500, then select a channel for testing.
d. Add a correction factor to the display of spectrum, and then test.
e. The resolution bandwidth of the spectrum analyzer was set sufficient scans were taken to show the out of band Emission if any up to10th harmonic.
f. Please refer to following tables for test antenna conducted emissions.

Radiated Spurious Measurement:

a. The EUT shall be placed at the specified height on a support, and in the position closest to normal use as declared by provider.
b. The test antenna shall be oriented initially for vertical polarization and shall be chosen to correspond to the frequency of the transmitter
c. The output of the test antenna shall be connected to the measuring receiver.
d. The transmitter shall be switched on and the measuring receiver shall be tuned to the frequency of the transmitter under test.
e. The test antenna shall be raised and lowered through the specified range of height until a maximum signal level is detected by the measuring receiver.
f. The transmitter shall then be rotated through 360° in the horizontal plane, until the maximum signal level is detected by the measuring receiver.
g. The test antenna shall be raised and lowered again through the specified range of height until a maximum signal level is detected by the measuring receiver.
h. The maximum signal level detected by the measuring receiver shall be noted.
i. The transmitter shall be replaced by a substitution antenna.
j. The substitution antenna shall be orientated for vertical polarization and the length of the substitution antenna shall be adjusted to correspond to the frequency of the transmitter.
k. The substitution antenna shall be connected to a calibrated signal generator.
l. If necessary, the input attenuator setting of the measuring receiver shall be adjusted in order to increase the sensitivity of the measuring receiver.
m. The test antenna shall be raised and lowered through the specified range of height to ensure that the maximum signal is received.
n. The input signal to the substitution antenna shall be adjusted to the level that produces a level detected by the measuring receiver, that is equal to the level noted while the transmitter radiated power was measured, corrected for the change of input attenuator setting of the measuring receiver.
o. The measurement shall be repeated with the test antenna and the substitution antenna orientated for horizontal polarization.
p. The measure of the effective radiated power is the larger of the two levels recorded at the input to the substitution antenna, corrected for gain of the substitution antenna if necessary.
q. The resolution bandwidth of the spectrum analyzer was set at 100 kHz for Part 22 and 1MHz for Part 24. The frequency range was checked up to 10th harmonic.
r. Test site anechoic chamber refer to ANSI C63.4:2014.

TEST RESULTS

Temperature	24.5℃	Humidity	53.7%
Test Engineer	Lushan Kong	Configurations	LTE

Conducted Measurement:

Remark:

We were tested all RB Configuration refer 3GPP TS136 521 for each Channel Bandwidth of LTE FDD Band 2, LTE FDD Band 4, LTE FDD Band 5, LTE FDD Band 7, LTE FDD Band 12, LTE FDD Band 14, LTE FDD Band 17, LTE FDD Band 25, LTE FDD Band 26, LTE TDD Band 41, LTE FDD Band 66 ; recorded worst case for each Channel Bandwidth of LTE FDD Band 2, LTE FDD Band 4, LTE FDD Band 5, LTE FDD Band 7, LTE FDD Band 12, LTE FDD Band 14, LTE FDD Band 17, LTE FDD Band 25, LTE FDD Band 26, LTE TDD Band 41, LTE FDD Band 66;

1.For E-UTRA Band 2, please refer to Appendix Band 2: Section E;
2.For E-UTRA Band 4, please refer to Appendix Band 4: Section E;
3.For E-UTRA Band 5, please refer to Appendix Band 5: Section E;
4.For E-UTRA Band 7, please refer to Appendix Band 7: Section E;
5.For E-UTRA Band 12, please refer to Appendix Band 12: Section E;
6.For E-UTRA Band 14, please refer to Appendix Band 14: Section E;
7.For E-UTRA Band 17, please refer to Appendix Band 17: Section E;
8.For E-UTRA Band 25, please refer to Appendix Band 25: Section E;
9.For E-UTRA Band 26(814 MHz -824MHz), please refer to Appendix Band 26(814 MHz -824MHz): Section E;
10.For E-UTRA Band 26(824 MHz -849MHz), please refer to Appendix Band 26(824 MHz -849MHz): Section E;
11.For E-UTRA Band 41, please refer to Appendix Band 41: Section E;
12.For E-UTRA Band 66, please refer to Appendix Band 66: Section E;

NOTE:We measured all modes and only recorded the worst case.

Working Frequency	Sub range (GHz)	RBW	VBW	Sweep time (s)
LTE FDD Band 2	0.000009~0.000015	1KHz	3KHz	Auto
	0.000015~0.03	10KHz	30KHz	Auto
	0.03~26	1 MHz	3 MHz	Auto
LTE FDD Band 4	0.000009~0.000015	1KHz	3KHz	Auto
	0.000015~0.03	10KHz	30KHz	Auto
	0.03~26	1 MHz	3 MHz	Auto
LTE FDD Band 5	0.000009~0.000015	1KHz	3KHz	Auto
	0.000015~0.03	10KHz	30KHz	Auto
	0.03~26	1 MHz	3 MHz	Auto
LTE FDD Band 7	0.000009~0.000015	1KHz	3KHz	Auto
	0.000015~0.03	10KHz	30KHz	Auto
	0.03~26	1 MHz	3 MHz	Auto
LTE FDD Band 12	0.000009~0.000015	1KHz	3KHz	Auto
	0.000015~0.03	10KHz	30KHz	Auto
	0.03~26	1 MHz	3 MHz	Auto
LTE FDD Band 14	0.000009~0.000015	1KHz	3KHz	Auto
	0.000015~0.03	10KHz	30KHz	Auto
	0.03~26	1 MHz	3 MHz	Auto
LTE FDD Band 17	0.000009~0.000015	1KHz	3KHz	Auto
	0.000015~0.03	10KHz	30KHz	Auto
	0.03~26	1 MHz	3 MHz	Auto
LTE FDD Band 25	0.000009~0.000015	1KHz	3KHz	Auto
	0.000015~0.03	10KHz	30KHz	Auto
	0.03~26	1 MHz	3 MHz	Auto
LTE FDD Band 26	0.000009~0.000015	1KHz	3KHz	Auto
	0.000015~0.03	10KHz	30KHz	Auto
	0.03~26	1 MHz	3 MHz	Auto
LTE FDD Band 41	0.000009~0.000015	1KHz	3KHz	Auto
	0.000015~0.03	10KHz	30KHz	Auto
	0.03~26	1 MHz	3 MHz	Auto
LTE FDD Band 66	0.000009~0.000015	1KHz	3KHz	Auto
	0.000015~0.03	10KHz	30KHz	Auto
	0.03~26	1 MHz	3 MHz	Auto

Remark:
1. Test results including cable loss;
2. We measured all modes and only recorded the worst case.

Radiated Measurement:

Remark:

We were tested all RB Configuration refer 3GPP TS136 521 for each Channel Bandwidth of LTE FDD Band 2, LTE FDD Band 4, LTE FDD Band 5, LTE FDD Band 7, LTE FDD Band 12, LTE FDD Band 14, LTE FDD Band 17, LTE FDD Band 25, LTE FDD Band 26, LTE TDD Band 41, LTE FDD Band 66 ; recorded worst case for each Channel Bandwidth of LTE FDD Band 2, LTE FDD Band 4, LTE FDD Band 5, LTE FDD Band 7, LTE FDD Band 12, LTE FDD Band 14, LTE FDD Band 17, LTE FDD Band 25, LTE FDD Band 26, LTE TDD Band 41, LTE FDD Band 66;

Temperature	24.5℃	Humidity	53.7%
Test Engineer	Lushan Kong	Configurations	LTE

For Less than 1 GHZ:

LTE FDD Band 2_Channel Bandwidth 10MHz_QPSK_ Low Channel

Frequency (MHz)	P_{Mea} (dBm)	P_{cl} (dB)	Diatance	G_a Antenna Gain(dB)	Peak EIRP (dBm)	Limit (dBm)	Margin (dB)	Polarization
152.17	-45.89	3.86	3.00	8.56	-41.19	-13.00	-28.19	H
236.70	-45.94	4.29	3.00	6.98	-43.25	-13.00	-30.25	H
556.59	-41.83	3.86	3.00	8.56	-37.13	-13.00	-24.13	V
898.24	-43.68	4.29	3.00	6.98	-40.99	-13.00	-27.99	V

LTE FDD Band 2_Channel Bandwidth 10MHz_QPSK_ Middle Channel

Frequency (MHz)	P_{Mea} (dBm)	P_{cl} (dB)	Diatance	G_a Antenna Gain(dB)	Peak EIRP (dBm)	Limit (dBm)	Margin (dB)	Polarization
148.60	-45.76	3.90	3.00	8.58	-41.08	-13.00	-28.08	H
237.01	-46.76	4.32	3.00	6.80	-44.28	-13.00	-31.28	H
553.42	-42.76	3.90	3.00	8.58	-38.08	-13.00	-25.08	V
907.17	-44.54	4.32	3.00	6.80	-42.06	-13.00	-29.06	V

LTE FDD Band 2_Channel Bandwidth 10MHz_QPSK_ High Channel

Frequency (MHz)	P_{Mea} (dBm)	P_{cl} (dB)	Diatance	G_a Antenna Gain(dB)	Peak EIRP (dBm)	Limit (dBm)	Margin (dB)	Polarization
156.27	-47.45	3.91	3.00	9.06	-42.30	-13.00	-29.30	H
234.76	-45.91	4.32	3.00	6.65	-43.58	-13.00	-30.58	H
557.38	-44.39	3.91	3.00	9.06	-39.24	-13.00	-26.24	V
904.88	-45.09	4.32	3.00	6.65	-42.76	-13.00	-29.76	V

LTE FDD Band 2_Channel Bandwidth 10MHz_16QAM _ Low Channel

Frequency (MHz)	P_{Mea} (dBm)	P_{cl} (dB)	Diatance	G_a Antenna Gain(dB)	Peak EIRP (dBm)	Limit (dBm)	Margin (dB)	Polarization
148.60	-45.98	3.86	3.00	8.56	-41.28	-13.00	-28.28	H
235.08	-46.02	4.29	3.00	6.98	-43.33	-13.00	-30.33	H
561.51	-41.69	3.86	3.00	8.56	-36.99	-13.00	-23.99	V
905.24	-43.36	4.29	3.00	6.98	-40.67	-13.00	-27.67	V

LTE FDD Band 2_Channel Bandwidth 10MHz_16QAM _ Middle Channel

Frequency (MHz)	P_{Mea} (dBm)	P_{cl} (dB)	Diatance	G_a Antenna Gain(dB)	Peak EIRP (dBm)	Limit (dBm)	Margin (dB)	Polarization
151.48	-46.00	3.90	3.00	8.58	-41.32	-13.00	-28.32	H
236.33	-46.44	4.32	3.00	6.80	-43.96	-13.00	-30.96	H
554.32	-42.72	3.90	3.00	8.58	-38.04	-13.00	-25.04	V
904.32	-44.73	4.32	3.00	6.80	-42.25	-13.00	-29.25	V

LTE FDD Band 2_Channel Bandwidth 10MHz_16QAM _ High Channel

Frequency (MHz)	P_{Mea} (dBm)	P_{cl} (dB)	Diatance	G_a Antenna Gain(dB)	Peak EIRP (dBm)	Limit (dBm)	Margin (dB)	Polarization
156.64	-47.43	3.91	3.00	9.06	-42.28	-13.00	-29.28	H
234.83	-45.83	4.32	3.00	6.65	-43.50	-13.00	-30.50	H
558.20	-44.43	3.91	3.00	9.06	-39.28	-13.00	-26.28	V
901.73	-45.33	4.32	3.00	6.65	-43.00	-13.00	-30.00	V

LTE FDD Band 4_Channel Bandwidth 10MHz_QPSK_ Low Channel

Frequency (MHz)	P_{Mea} (dBm)	P_{cl} (dB)	Diatance	G_a Antenna Gain(dB)	Peak EIRP (dBm)	Limit (dBm)	Margin (dB)	Polarization
149.36	-42.63	5.26	3.00	9.88	-38.01	-13.00	-25.01	H
233.82	-48.27	6.11	3.00	11.36	-43.02	-13.00	-30.02	H
558.73	-45.01	5.26	3.00	9.88	-40.39	-13.00	-27.39	V
900.09	-50.10	6.11	3.00	11.36	-44.85	-13.00	-31.85	V

LTE FDD Band 4_Channel Bandwidth 10MHz_QPSK_ Middle Channel

Frequency (MHz)	P_{Mea} (dBm)	P_{cl} (dB)	Diatance	G_a Antenna Gain(dB)	Peak EIRP (dBm)	Limit (dBm)	Margin (dB)	Polarization
150.06	-44.37	5.32	3.00	10.03	-39.66	-13.00	-26.66	H
242.67	-49.98	6.19	3.00	11.41	-44.76	-13.00	-31.76	H
561.29	-45.13	5.32	3.00	10.03	-40.42	-13.00	-27.42	V
899.45	-50.92	6.19	3.00	11.41	-45.70	-13.00	-32.70	V

LTE FDD Band 4_Channel Bandwidth 10MHz_QPSK_ High Channel

Frequency (MHz)	P_{Mea} (dBm)	P_{cl} (dB)	Diatance	G_a Antenna Gain(dB)	Peak EIRP (dBm)	Limit (dBm)	Margin (dB)	Polarization
151.55	-45.63	5.36	3.00	9.62	-41.37	-13.00	-28.37	H
238.10	-50.79	6.24	3.00	11.46	-45.57	-13.00	-32.57	H
553.65	-46.23	5.36	3.00	9.62	-41.97	-13.00	-28.97	V
898.48	-51.31	6.24	3.00	11.46	-46.09	-13.00	-33.09	V

LTE FDD Band 4_Channel Bandwidth 10MHz_16QAM _ Low Channel

Frequency (MHz)	P_{Mea} (dBm)	P_{cl} (dB)	Diatance	G_a Antenna Gain(dB)	Peak EIRP (dBm)	Limit (dBm)	Margin (dB)	Polarization
150.70	-42.89	5.26	3.00	9.88	-38.27	-13.00	-25.27	H
237.94	-48.45	6.11	3.00	11.36	-43.20	-13.00	-30.20	H
558.75	-44.69	5.26	3.00	9.88	-40.07	-13.00	-27.07	V
897.66	-49.97	6.11	3.00	11.36	-44.72	-13.00	-31.72	V

LTE FDD Band 4_Channel Bandwidth 10MHz_16QAM _ Middle Channel

Frequency (MHz)	P_{Mea} (dBm)	P_{cl} (dB)	Diatance	G_a Antenna Gain(dB)	Peak EIRP (dBm)	Limit (dBm)	Margin (dB)	Polarization
148.42	-44.29	5.32	3.00	10.03	-39.58	-13.00	-26.58	H
237.55	-49.77	6.19	3.00	11.41	-44.55	-13.00	-31.55	H
559.75	-45.01	5.32	3.00	10.03	-40.30	-13.00	-27.30	V
905.02	-50.78	6.19	3.00	11.41	-45.56	-13.00	-32.56	V

LTE FDD Band 4_Channel Bandwidth 10MHz_16QAM _ High Channel

Frequency (MHz)	P_{Mea} (dBm)	P_{cl} (dB)	Diatance	G_a Antenna Gain(dB)	Peak EIRP (dBm)	Limit (dBm)	Margin (dB)	Polarization
156.04	-45.35	5.36	3.00	9.62	-41.09	-13.00	-28.09	H
234.65	-50.89	6.24	3.00	11.46	-45.67	-13.00	-32.67	H
557.39	-46.36	5.36	3.00	9.62	-42.10	-13.00	-29.10	V
903.91	-51.38	6.24	3.00	11.46	-46.16	-13.00	-33.16	V

LTE FDD Band 5_Channel Bandwidth 10MHz_QPSK_ Low Channel

Frequency (MHz)	P_{Mea} (dBm)	P_{cl} (dB)	Diatance	G_a Antenna Gain(dB)	Peak EIRP (dBm)	Limit (dBm)	Margin (dB)	Polarization
152.11	-43.82	5.26	3.00	9.88	-39.20	-13.00	-26.20	H
239.20	-47.91	6.11	3.00	11.36	-42.66	-13.00	-29.66	H
557.28	-46.97	5.26	3.00	9.88	-42.35	-13.00	-29.35	V
902.36	-50.98	6.11	3.00	11.36	-45.73	-13.00	-32.73	V

LTE FDD Band 5_Channel Bandwidth 10MHz_QPSK_ Middle Channel

Frequency (MHz)	P_{Mea} (dBm)	P_{cl} (dB)	Diatance	G_a Antenna Gain(dB)	Peak EIRP (dBm)	Limit (dBm)	Margin (dB)	Polarization
150.46	-42.68	5.32	3.00	10.03	-37.97	-13.00	-24.97	H
237.95	-45.89	6.19	3.00	11.41	-40.67	-13.00	-27.67	H
554.63	-46.86	5.32	3.00	10.03	-42.15	-13.00	-29.15	V
899.34	-51.58	6.19	3.00	11.41	-46.36	-13.00	-33.36	V

LTE FDD Band 5_Channel Bandwidth 10MHz_QPSK_ High Channel

Frequency (MHz)	P_{Mea} (dBm)	P_{cl} (dB)	Diatance	G_a Antenna Gain(dB)	Peak EIRP (dBm)	Limit (dBm)	Margin (dB)	Polarization
148.91	-41.45	5.36	3.00	9.62	-37.19	-13.00	-24.19	H
235.79	-44.35	6.24	3.00	11.46	-39.13	-13.00	-26.13	H
552.47	-45.65	5.36	3.00	9.62	-41.39	-13.00	-28.39	V
900.74	-47.11	6.24	3.00	11.46	-41.89	-13.00	-28.89	V

LTE FDD Band 5_Channel Bandwidth 10MHz_16QAM _ Low Channel

Frequency (MHz)	P_{Mea} (dBm)	P_{cl} (dB)	Diatance	G_a Antenna Gain(dB)	Peak EIRP (dBm)	Limit (dBm)	Margin (dB)	Polarization
151.37	-43.59	5.26	3.00	9.88	-38.97	-13.00	-25.97	H
240.16	-47.71	6.11	3.00	11.36	-42.46	-13.00	-29.46	H
556.50	-47.10	5.26	3.00	9.88	-42.48	-13.00	-29.48	V
906.17	-51.11	6.11	3.00	11.36	-45.86	-13.00	-32.86	V

LTE FDD Band 5_Channel Bandwidth 10MHz_16QAM _ Middle Channel

Frequency (MHz)	P_{Mea} (dBm)	P_{cl} (dB)	Diatance	G_a Antenna Gain(dB)	Peak EIRP (dBm)	Limit (dBm)	Margin (dB)	Polarization
151.62	-42.78	5.32	3.00	10.03	-38.07	-13.00	-25.07	H
234.98	-46.14	6.19	3.00	11.41	-40.92	-13.00	-27.92	H
561.05	-46.83	5.32	3.00	10.03	-42.12	-13.00	-29.12	V
906.93	-51.43	6.19	3.00	11.41	-46.21	-13.00	-33.21	V

LTE FDD Band 5_Channel Bandwidth 10MHz_16QAM _ High Channel

Frequency (MHz)	P_{Mea} (dBm)	P_{cl} (dB)	Diatance	G_a Antenna Gain(dB)	Peak EIRP (dBm)	Limit (dBm)	Margin (dB)	Polarization
154.65	-41.60	5.36	3.00	9.62	-37.34	-13.00	-24.34	H
235.60	-44.44	6.24	3.00	11.46	-39.22	-13.00	-26.22	H
556.05	-45.55	5.36	3.00	9.62	-41.29	-13.00	-28.29	V
903.84	-47.28	6.24	3.00	11.46	-42.06	-13.00	-29.06	V

LTE FDD Band 7_Channel Bandwidth 20MHz_QPSK_ Low Channel

Frequency (MHz)	P_{Mea} (dBm)	P_{cl} (dB)	Diatance	G_a Antenna Gain(dB)	Peak EIRP (dBm)	Limit (dBm)	Margin (dB)	Polarization
149.30	-50.24	4.62	3.00	9.81	-45.05	-25.00	-20.05	H
237.12	-51.07	5.94	3.00	10.86	-46.15	-25.00	-21.15	H
556.99	-52.26	4.62	3.00	9.81	-47.07	-25.00	-22.07	V
906.99	-54.02	5.94	3.00	10.86	-49.10	-25.00	-24.10	V

LTE FDD Band 7_Channel Bandwidth 20MHz_QPSK_ Middle Channel

Frequency (MHz)	P_{Mea} (dBm)	P_{cl} (dB)	Diatance	G_a Antenna Gain(dB)	Peak EIRP (dBm)	Limit (dBm)	Margin (dB)	Polarization
156.92	-49.35	4.63	3.00	9.84	-44.14	-25.00	-19.14	H
242.35	-51.16	5.94	3.00	10.86	-46.24	-25.00	-21.24	H
555.58	-52.94	4.63	3.00	9.84	-47.73	-25.00	-22.73	V
900.26	-54.60	5.94	3.00	10.86	-49.68	-25.00	-24.68	V

LTE FDD 7_Channel Bandwidth 20MHz_QPSK_ High Channel

Frequency (MHz)	P_{Mea} (dBm)	P_{cl} (dB)	Diatance	G_a Antenna Gain(dB)	Peak EIRP (dBm)	Limit (dBm)	Margin (dB)	Polarization
154.31	-51.67	4.65	3.00	9.90	-46.42	-25.00	-21.42	H
239.55	-52.96	5.95	3.00	10.91	-48.00	-25.00	-23.00	H
559.77	-54.05	4.65	3.00	9.90	-48.80	-25.00	-23.80	V
904.79	-54.66	5.95	3.00	10.91	-49.70	-25.00	-24.70	V

LTE FDD Band 7_Channel Bandwidth 20MHz_16QAM _ Low Channel

Frequency (MHz)	P_{Mea} (dBm)	P_{cl} (dB)	Diatance	G_a Antenna Gain(dB)	Peak EIRP (dBm)	Limit (dBm)	Margin (dB)	Polarization
156.24	-50.16	4.62	3.00	9.81	-44.97	-25.00	-19.97	H
241.09	-50.93	5.94	3.00	10.86	-46.01	-25.00	-21.01	H
554.16	-52.15	4.62	3.00	9.81	-46.96	-25.00	-21.96	V
902.20	-54.11	5.94	3.00	10.86	-49.19	-25.00	-24.19	V

LTE FDD Band 7_Channel Bandwidth 20MHz_16QAM _ Middle Channel

Frequency (MHz)	P_{Mea} (dBm)	P_{cl} (dB)	Diatance	G_a Antenna Gain(dB)	Peak EIRP (dBm)	Limit (dBm)	Margin (dB)	Polarization
151.02	-49.46	4.63	3.00	9.84	-44.25	-25.00	-19.25	H
239.07	-51.38	5.94	3.00	10.86	-46.46	-25.00	-21.46	H
554.18	-53.10	4.63	3.00	9.84	-47.89	-25.00	-22.89	V
904.80	-54.68	5.94	3.00	10.86	-49.76	-25.00	-24.76	V

LTE FDD Band 7_Channel Bandwidth 20MHz_16QAM _ High Channel

Frequency (MHz)	P_{Mea} (dBm)	P_{cl} (dB)	Diatance	G_a Antenna Gain(dB)	Peak EIRP (dBm)	Limit (dBm)	Margin (dB)	Polarization
155.31	-51.88	4.65	3.00	9.90	-46.63	-25.00	-21.63	H
239.97	-52.97	5.95	3.00	10.91	-48.01	-25.00	-23.01	H
553.21	-53.83	4.65	3.00	9.90	-48.58	-25.00	-23.58	V
900.10	-54.77	5.95	3.00	10.91	-49.81	-25.00	-24.81	V

LTE FDD Band 12_Channel Bandwidth 10MHz_QPSK _ Low Channel

Frequency (MHz)	P_{Mea} (dBm)	P_{cl} (dB)	Diatance	G_a Antenna Gain(dB)	Peak EIRP (dBm)	Limit (dBm)	Margin (dB)	Polarization
152.08	-46.31	3.86	3.00	8.56	-41.61	-13.00	-28.61	H
234.69	-47.26	4.29	3.00	6.98	-44.57	-13.00	-31.57	H
553.26	-45.48	3.86	3.00	8.56	-40.78	-13.00	-27.78	V
903.05	-48.63	4.29	3.00	6.98	-45.94	-13.00	-32.94	V

LTE FDD Band 12_Channel Bandwidth 10MHz_QPSK _ Middle Channel

Frequency (MHz)	P_{Mea} (dBm)	P_{cl} (dB)	Diatance	G_a Antenna Gain(dB)	Peak EIRP (dBm)	Limit (dBm)	Margin (dB)	Polarization
155.25	-46.07	3.90	3.00	8.58	-41.39	-13.00	-28.39	H
241.15	-46.57	4.32	3.00	6.80	-44.09	-13.00	-31.09	H
556.13	-46.33	3.90	3.00	8.58	-41.65	-13.00	-28.65	V
897.91	-49.81	4.32	3.00	6.80	-47.33	-13.00	-34.33	V

LTE FDD Band 12_Channel Bandwidth 10MHz_QPSK _ High Channel

Frequency (MHz)	P_{Mea} (dBm)	P_{cl} (dB)	Diatance	G_a Antenna Gain(dB)	Peak EIRP (dBm)	Limit (dBm)	Margin (dB)	Polarization
157.92	-44.35	3.91	3.00	9.06	-39.20	-13.00	-26.20	H
242.68	-45.47	4.32	3.00	6.65	-43.14	-13.00	-30.14	H
555.72	-46.13	3.91	3.00	9.06	-40.98	-13.00	-27.98	V
900.64	-47.79	4.32	3.00	6.65	-45.46	-13.00	-32.46	V

LTE FDD Band 12_Channel Bandwidth 10MHz_16QAM _ Low Channel

Frequency (MHz)	P_{Mea} (dBm)	P_{cl} (dB)	Diatance	G_a Antenna Gain(dB)	Peak EIRP (dBm)	Limit (dBm)	Margin (dB)	Polarization
152.47	-46.11	3.86	3.00	8.56	-41.41	-13.00	-28.41	H
242.81	-47.18	4.29	3.00	6.98	-44.49	-13.00	-31.49	H
553.01	-45.22	3.86	3.00	8.56	-40.52	-13.00	-27.52	V
899.24	-48.50	4.29	3.00	6.98	-45.81	-13.00	-32.81	V

LTE FDD Band 12_Channel Bandwidth 10MHz_16QAM _ Middle Channel

Frequency (MHz)	P_{Mea} (dBm)	P_{cl} (dB)	Diatance	G_a Antenna Gain(dB)	Peak EIRP (dBm)	Limit (dBm)	Margin (dB)	Polarization
148.39	-46.03	3.90	3.00	8.58	-41.35	-13.00	-28.35	H
233.71	-46.89	4.32	3.00	6.80	-44.41	-13.00	-31.41	H
554.82	-46.40	3.90	3.00	8.58	-41.72	-13.00	-28.72	V
899.90	-49.81	4.32	3.00	6.80	-47.33	-13.00	-34.33	V

LTE FDD Band 12_Channel Bandwidth 10MHz_16QAM _ High Channel

Frequency (MHz)	P_{Mea} (dBm)	P_{cl} (dB)	Diatance	G_a Antenna Gain(dB)	Peak EIRP (dBm)	Limit (dBm)	Margin (dB)	Polarization
150.81	-44.16	3.91	3.00	9.06	-39.01	-13.00	-26.01	H
241.41	-45.36	4.32	3.00	6.65	-43.03	-13.00	-30.03	H
559.03	-45.93	3.91	3.00	9.06	-40.78	-13.00	-27.78	V
898.33	-47.92	4.32	3.00	6.65	-45.59	-13.00	-32.59	V

LTE FDD Band 14_Channel Bandwidth 10MHz_QPSK _ Middle Channel

Frequency (MHz)	P_{Mea} (dBm)	P_{cl} (dB)	Diatance	G_a Antenna Gain(dB)	Peak EIRP (dBm)	Limit (dBm)	Margin (dB)	Polarization
153.92	-44.42	5.32	3.00	10.03	-39.71	-13.00	-26.71	H
238.78	-49.80	6.19	3.00	11.41	-44.58	-13.00	-31.58	H
554.45	-45.21	5.32	3.00	10.03	-40.50	-13.00	-27.50	V
905.70	-44.42	5.32	3.00	10.03	-39.71	-13.00	-26.71	V

LTE FDD Band 14_Channel Bandwidth 10MHz_16QAM_ Middle Channel

Frequency (MHz)	P_{Mea} (dBm)	P_{cl} (dB)	Diatance	G_a Antenna Gain(dB)	Peak EIRP (dBm)	Limit (dBm)	Margin (dB)	Polarization
152.02	-44.55	5.32	3.00	10.03	-39.84	-13.00	-26.84	H
242.75	-50.01	6.19	3.00	11.41	-44.79	-13.00	-31.79	H
555.19	-45.21	5.32	3.00	10.03	-40.50	-13.00	-27.50	V
901.64	-50.77	6.19	3.00	11.41	-45.55	-13.00	-32.55	V

LTE FDD Band 17_Channel Bandwidth 10MHz_QPSK_ Low Channel

Frequency (MHz)	P_{Mea} (dBm)	P_{cl} (dB)	Diatance	G_a Antenna Gain(dB)	Peak EIRP (dBm)	Limit (dBm)	Margin (dB)	Polarization
156.89	-43.56	5.26	3.00	9.88	-38.94	-13.00	-25.94	H
237.59	-47.79	6.11	3.00	11.36	-42.54	-13.00	-29.54	H
555.93	-47.01	5.26	3.00	9.88	-42.39	-13.00	-29.39	V
899.33	-51.25	6.11	3.00	11.36	-46.00	-13.00	-33.00	V

LTE FDD Band 17_Channel Bandwidth 10MHz_QPSK_ Middle Channel

Frequency (MHz)	P_{Mea} (dBm)	P_{cl} (dB)	Diatance	G_a Antenna Gain(dB)	Peak EIRP (dBm)	Limit (dBm)	Margin (dB)	Polarization
155.80	-42.92	5.32	3.00	10.03	-38.21	-13.00	-25.21	H
235.33	-45.92	6.19	3.00	11.41	-40.70	-13.00	-27.70	H
554.61	-46.94	5.32	3.00	10.03	-42.23	-13.00	-29.23	V
901.83	-51.40	6.19	3.00	11.41	-46.18	-13.00	-33.18	V

LTE FDD 17_Channel Bandwidth 10MHz_QPSK_ High Channel

Frequency (MHz)	P_{Mea} (dBm)	P_{cl} (dB)	Diatance	G_a Antenna Gain(dB)	Peak EIRP (dBm)	Limit (dBm)	Margin (dB)	Polarization
152.94	-41.33	5.36	3.00	9.62	-37.07	-13.00	-24.07	H
241.61	-44.27	6.24	3.00	11.46	-39.05	-13.00	-26.05	H
554.00	-45.57	5.36	3.00	9.62	-41.31	-13.00	-28.31	V
897.24	-47.32	6.24	3.00	11.46	-42.10	-13.00	-29.10	V

LTE FDD Band 17_Channel Bandwidth 10MHz_16QAM _ Low Channel

Frequency (MHz)	P_{Mea} (dBm)	P_{cl} (dB)	Diatance	G_a Antenna Gain(dB)	Peak EIRP (dBm)	Limit (dBm)	Margin (dB)	Polarization
153.14	-43.67	5.26	3.00	9.88	-39.05	-13.00	-26.05	H
241.65	-47.97	6.11	3.00	11.36	-42.72	-13.00	-29.72	H
556.30	-47.11	5.26	3.00	9.88	-42.49	-13.00	-29.49	V
903.69	-51.04	6.11	3.00	11.36	-45.79	-13.00	-32.79	V

LTE FDD Band 17_Channel Bandwidth 10MHz_16QAM _ Middle Channel

Frequency (MHz)	P_{Mea} (dBm)	P_{cl} (dB)	Diatance	G_a Antenna Gain(dB)	Peak EIRP (dBm)	Limit (dBm)	Margin (dB)	Polarization
157.77	-42.65	5.32	3.00	10.03	-37.94	-13.00	-24.94	H
239.85	-46.11	6.19	3.00	11.41	-40.89	-13.00	-27.89	H
556.77	-46.76	5.32	3.00	10.03	-42.05	-13.00	-29.05	V
898.36	-51.65	6.19	3.00	11.41	-46.43	-13.00	-33.43	V

LTE FDD Band 17_Channel Bandwidth 10MHz_16QAM _ High Channel

Frequency (MHz)	P_{Mea} (dBm)	P_{cl} (dB)	Diatance	G_a Antenna Gain(dB)	Peak EIRP (dBm)	Limit (dBm)	Margin (dB)	Polarization
150.77	-41.31	5.36	3.00	9.62	-37.05	-13.00	-24.05	H
237.94	-44.26	6.24	3.00	11.46	-39.04	-13.00	-26.04	H
556.44	-45.48	5.36	3.00	9.62	-41.22	-13.00	-28.22	V
898.46	-47.42	6.24	3.00	11.46	-42.20	-13.00	-29.20	V

LTE FDD Band 25_Channel Bandwidth 20MHz_QPSK_ Low Channel

Frequency (MHz)	P_{Mea} (dBm)	P_{cl} (dB)	Diatance	G_a Antenna Gain(dB)	Peak EIRP (dBm)	Limit (dBm)	Margin (dB)	Polarization
157.48	-50.16	4.62	3.00	9.81	-44.97	-25.00	-19.97	H
239.04	-51.18	5.94	3.00	10.86	-46.26	-25.00	-21.26	H
553.81	-52.38	4.62	3.00	9.81	-47.19	-25.00	-22.19	V
899.52	-54.03	5.94	3.00	10.86	-49.11	-25.00	-24.11	V

LTE FDD Band 25_Channel Bandwidth 20MHz_QPSK_ Middle Channel

Frequency (MHz)	P_{Mea} (dBm)	P_{cl} (dB)	Diatance	G_a Antenna Gain(dB)	Peak EIRP (dBm)	Limit (dBm)	Margin (dB)	Polarization
152.89	-49.31	4.63	3.00	9.84	-44.10	-25.00	-19.10	H
240.47	-51.28	5.94	3.00	10.86	-46.36	-25.00	-21.36	H
560.75	-52.85	4.63	3.00	9.84	-47.64	-25.00	-22.64	V
905.66	-54.77	5.94	3.00	10.86	-49.85	-25.00	-24.85	V

LTE FDD Band 25_Channel Bandwidth 20MHz_QPSK_ High Channel

Frequency (MHz)	P_{Mea} (dBm)	P_{cl} (dB)	Diatance	G_a Antenna Gain(dB)	Peak EIRP (dBm)	Limit (dBm)	Margin (dB)	Polarization
155.44	-51.82	4.65	3.00	9.90	-46.57	-25.00	-21.57	H
240.18	-53.21	5.95	3.00	10.91	-48.25	-25.00	-23.25	H
555.25	-53.96	4.65	3.00	9.90	-48.71	-25.00	-23.71	V
900.06	-54.83	5.95	3.00	10.91	-49.87	-25.00	-24.87	V

LTE FDD Band 25_Channel Bandwidth 20MHz_16QAM _ Low Channel

Frequency (MHz)	P_{Mea} (dBm)	P_{cl} (dB)	Diatance	G_a Antenna Gain(dB)	Peak EIRP (dBm)	Limit (dBm)	Margin (dB)	Polarization
155.97	-50.23	4.62	3.00	9.81	-45.04	-25.00	-20.04	H
236.25	-50.99	5.94	3.00	10.86	-46.07	-25.00	-21.07	H
552.05	-52.32	4.62	3.00	9.81	-47.13	-25.00	-22.13	V
897.87	-54.13	5.94	3.00	10.86	-49.21	-25.00	-24.21	V

LTE FDD Band 25_Channel Bandwidth 20MHz_16QAM _ Middle Channel

Frequency (MHz)	P_{Mea} (dBm)	P_{cl} (dB)	Diatance	G_a Antenna Gain(dB)	Peak EIRP (dBm)	Limit (dBm)	Margin (dB)	Polarization
152.58	-49.22	4.63	3.00	9.84	-44.01	-25.00	-19.01	H
234.86	-51.28	5.94	3.00	10.86	-46.36	-25.00	-21.36	H
561.37	-52.99	4.63	3.00	9.84	-47.78	-25.00	-22.78	V
899.96	-54.75	5.94	3.00	10.86	-49.83	-25.00	-24.83	V

LTE FDD Band 25_Channel Bandwidth 20MHz_16QAM _ High Channel

Frequency (MHz)	P_{Mea} (dBm)	P_{cl} (dB)	Diatance	G_a Antenna Gain(dB)	Peak EIRP (dBm)	Limit (dBm)	Margin (dB)	Polarization
152.56	-51.99	4.65	3.00	9.90	-46.74	-25.00	-21.74	H
237.78	-53.16	5.95	3.00	10.91	-48.20	-25.00	-23.20	H
551.88	-53.93	4.65	3.00	9.90	-48.68	-25.00	-23.68	V
901.60	-54.95	5.95	3.00	10.91	-49.99	-25.00	-24.99	V

LTE FDD Band 26(814-824MHz)_Channel Bandwidth 5MHz_QPSK_ Low Channel

Frequency (MHz)	P_{Mea} (dBm)	P_{cl} (dB)	Diatance	G_a Antenna Gain(dB)	Peak EIRP (dBm)	Limit (dBm)	Margin (dB)	Polarization
153.48	-46.31	3.86	3.00	8.56	-41.61	-13.00	-28.61	H
237.00	-47.01	4.29	3.00	6.98	-44.32	-13.00	-31.32	H
561.48	-45.41	3.86	3.00	8.56	-40.71	-13.00	-27.71	V
905.01	-48.32	4.29	3.00	6.98	-45.63	-13.00	-32.63	V

LTE FDD Band 26(814-824MHz)_Channel Bandwidth 5MHz_QPSK_ Middle Channel

Frequency (MHz)	P_{Mea} (dBm)	P_{cl} (dB)	Diatance	G_a Antenna Gain(dB)	Peak EIRP (dBm)	Limit (dBm)	Margin (dB)	Polarization
154.05	-46.10	3.90	3.00	8.58	-41.42	-13.00	-28.42	H
240.76	-46.52	4.32	3.00	6.80	-44.04	-13.00	-31.04	H
556.19	-46.42	3.90	3.00	8.58	-41.74	-13.00	-28.74	V
899.86	-49.81	4.32	3.00	6.80	-47.33	-13.00	-34.33	V

LTE FDD Band 26(814-824MHz)_Channel Bandwidth 5MHz_QPSK_ High Channel

Frequency (MHz)	P_{Mea} (dBm)	P_{cl} (dB)	Diatance	G_a Antenna Gain(dB)	Peak EIRP (dBm)	Limit (dBm)	Margin (dB)	Polarization
152.37	-44.24	3.91	3.00	9.06	-39.09	-13.00	-26.09	H
239.67	-45.51	4.32	3.00	6.65	-43.18	-13.00	-30.18	H
553.24	-46.17	3.91	3.00	9.06	-41.02	-13.00	-28.02	V
898.51	-47.82	4.32	3.00	6.65	-45.49	-13.00	-32.49	V

LTE FDD Band 26(814-824MHz)_Channel Bandwidth 5MHz_16QAM _ Low Channel

Frequency (MHz)	P_{Mea} (dBm)	P_{cl} (dB)	Diatance	G_a Antenna Gain(dB)	Peak EIRP (dBm)	Limit (dBm)	Margin (dB)	Polarization
154.15	-46.30	3.86	3.00	8.56	-41.60	-13.00	-28.60	H
243.00	-47.10	4.29	3.00	6.98	-44.41	-13.00	-31.41	H
560.14	-45.41	3.86	3.00	8.56	-40.71	-13.00	-27.71	V
901.59	-48.33	4.29	3.00	6.98	-45.64	-13.00	-32.64	V

LTE FDD Band 26(814-824MHz)_Channel Bandwidth 5MHz_16QAM _ Middle Channel

Frequency (MHz)	P_{Mea} (dBm)	P_{cl} (dB)	Diatance	G_a Antenna Gain(dB)	Peak EIRP (dBm)	Limit (dBm)	Margin (dB)	Polarization
157.88	-46.17	3.90	3.00	8.58	-41.49	-13.00	-28.49	H
242.15	-46.82	4.32	3.00	6.80	-44.34	-13.00	-31.34	H
553.49	-46.31	3.90	3.00	8.58	-41.63	-13.00	-28.63	V
903.24	-49.44	4.32	3.00	6.80	-46.96	-13.00	-33.96	V

LTE FDD Band 26(814-824MHz)_Channel Bandwidth 5MHz_16QAM _ High Channel

Frequency (MHz)	P_{Mea} (dBm)	P_{cl} (dB)	Diatance	G_a Antenna Gain(dB)	Peak EIRP (dBm)	Limit (dBm)	Margin (dB)	Polarization
150.40	-44.27	3.91	3.00	9.06	-39.12	-13.00	-26.12	H
238.30	-45.37	4.32	3.00	6.65	-43.04	-13.00	-30.04	H
552.72	-45.94	3.91	3.00	9.06	-40.79	-13.00	-27.79	V
906.78	-47.86	4.32	3.00	6.65	-45.53	-13.00	-32.53	V

LTE FDD Band 26(824-849MHz)_Channel Bandwidth 15MHz_QPSK_ Low Channel

Frequency (MHz)	P_{Mea} (dBm)	P_{cl} (dB)	Diatance	G_a Antenna Gain(dB)	Peak EIRP (dBm)	Limit (dBm)	Margin (dB)	Polarization
148.62	-46.15	3.86	3.00	8.56	-41.45	-13.00	-28.45	H
241.09	-47.13	4.29	3.00	6.98	-44.44	-13.00	-31.44	H
554.74	-45.25	3.86	3.00	8.56	-40.55	-13.00	-27.55	V
899.48	-48.33	4.29	3.00	6.98	-45.64	-13.00	-32.64	V

LTE FDD Band 26(824-849MHz)_Channel Bandwidth 15MHz_QPSK_ Middle Channel

Frequency (MHz)	P_{Mea} (dBm)	P_{cl} (dB)	Diatance	G_a Antenna Gain(dB)	Peak EIRP (dBm)	Limit (dBm)	Margin (dB)	Polarization
155.04	-46.27	3.90	3.00	8.58	-41.59	-13.00	-28.59	H
237.20	-46.52	4.32	3.00	6.80	-44.04	-13.00	-31.04	H
553.04	-46.26	3.90	3.00	8.58	-41.58	-13.00	-28.58	V
898.33	-49.44	4.32	3.00	6.80	-46.96	-13.00	-33.96	V

LTE FDD Band 26(824-849MHz)_Channel Bandwidth 15MHz_QPSK_ High Channel

Frequency (MHz)	P_{Mea} (dBm)	P_{cl} (dB)	Diatance	G_a Antenna Gain(dB)	Peak EIRP (dBm)	Limit (dBm)	Margin (dB)	Polarization
155.67	-44.01	3.91	3.00	9.06	-38.86	-13.00	-25.86	H
234.87	-45.51	4.32	3.00	6.65	-43.18	-13.00	-30.18	H
555.89	-46.08	3.91	3.00	9.06	-40.93	-13.00	-27.93	V
904.52	-48.01	4.32	3.00	6.65	-45.68	-13.00	-32.68	V

LTE FDD Band 26(824-849MHz)_Channel Bandwidth 15MHz_16QAM_ Low Channel

Frequency (MHz)	P_{Mea} (dBm)	P_{cl} (dB)	Diatance	G_a Antenna Gain(dB)	Peak EIRP (dBm)	Limit (dBm)	Margin (dB)	Polarization
154.18	-46.30	3.86	3.00	8.56	-41.60	-13.00	-28.60	H
235.42	-47.21	4.29	3.00	6.98	-44.52	-13.00	-31.52	H
560.82	-45.52	3.86	3.00	8.56	-40.82	-13.00	-27.82	V
901.94	-48.48	4.29	3.00	6.98	-45.79	-13.00	-32.79	V

LTE FDD Band 26(824-849MHz)_Channel Bandwidth 15MHz_16QAM_ Middle Channel

Frequency (MHz)	P_{Mea} (dBm)	P_{cl} (dB)	Diatance	G_a Antenna Gain(dB)	Peak EIRP (dBm)	Limit (dBm)	Margin (dB)	Polarization
153.81	-45.94	3.90	3.00	8.58	-41.26	-13.00	-28.26	H
233.67	-46.60	4.32	3.00	6.80	-44.12	-13.00	-31.12	H
557.38	-46.52	3.90	3.00	8.58	-41.84	-13.00	-28.84	V
904.98	-49.73	4.32	3.00	6.80	-47.25	-13.00	-34.25	V

LTE FDD Band 26(824-849MHz)_Channel Bandwidth 15MHz_16QAM_ High Channel

Frequency (MHz)	P_{Mea} (dBm)	P_{cl} (dB)	Diatance	G_a Antenna Gain(dB)	Peak EIRP (dBm)	Limit (dBm)	Margin (dB)	Polarization
154.03	-44.21	3.91	3.00	9.06	-39.06	-13.00	-26.06	H
234.43	-45.29	4.32	3.00	6.65	-42.96	-13.00	-29.96	H
553.02	-46.03	3.91	3.00	9.06	-40.88	-13.00	-27.88	V
897.66	-47.96	4.32	3.00	6.65	-45.63	-13.00	-32.63	V

LTE TDD Band 41_Channel Bandwidth 20MHz_QPSK_ Low Channel

Frequency (MHz)	P_{Mea} (dBm)	P_{cl} (dB)	Diatance	G_a Antenna Gain(dB)	Peak EIRP (dBm)	Limit (dBm)	Margin (dB)	Polarization
157.89	-42.85	4.04	3.00	8.68	-38.21	-25.00	-13.21	H
241.39	-48.32	4.11	3.00	6.83	-45.61	-25.00	-20.61	H
556.60	-44.83	3.93	3.00	8.40	-40.36	-25.00	-15.36	V
898.14	-50.00	4.31	3.00	6.96	-47.34	-25.00	-22.34	V

LTE TDD Band 41_Channel Bandwidth 20MHz_QPSK_ Middle Channel

Frequency (MHz)	P_{Mea} (dBm)	P_{cl} (dB)	Diatance	G_a Antenna Gain(dB)	Peak EIRP (dBm)	Limit (dBm)	Margin (dB)	Polarization
149.96	-44.23	4.02	3.00	8.49	-39.75	-25.00	-14.75	H
236.61	-49.97	4.33	3.00	6.99	-47.30	-25.00	-22.30	H
556.22	-45.23	3.99	3.00	8.61	-40.61	-25.00	-15.61	V
905.46	-50.64	4.22	3.00	7.11	-47.76	-25.00	-22.76	V

LTE TDD Band 41_Channel Bandwidth 20MHz_QPSK_ High Channel

Frequency (MHz)	P_{Mea} (dBm)	P_{cl} (dB)	Diatance	G_a Antenna Gain(dB)	Peak EIRP (dBm)	Limit (dBm)	Margin (dB)	Polarization
152.60	-45.41	3.78	3.00	8.59	-40.61	-25.00	-15.61	H
239.66	-50.69	4.21	3.00	7.09	-47.80	-25.00	-22.80	H
553.77	-46.37	3.81	3.00	8.46	-41.71	-25.00	-16.71	V
906.03	-51.45	4.14	3.00	7.10	-48.49	-25.00	-23.49	V

LTE TDD Band 41_Channel Bandwidth 20MHz_16QAM_ Low Channel

Frequency (MHz)	P_{Mea} (dBm)	P_{cl} (dB)	Diatance	G_a Antenna Gain(dB)	Peak EIRP (dBm)	Limit (dBm)	Margin (dB)	Polarization
155.03	-42.61	3.86	3.00	8.49	-37.98	-25.00	-12.98	H
242.84	-48.44	4.37	3.00	7.06	-45.76	-25.00	-20.76	H
555.32	-44.99	3.91	3.00	8.47	-40.44	-25.00	-15.44	V
899.56	-50.25	4.31	3.00	6.90	-47.67	-25.00	-22.67	V

LTE TDD Band 41_Channel Bandwidth 20MHz_16QAM_ Middle Channel

Frequency (MHz)	P_{Mea} (dBm)	P_{cl} (dB)	Diatance	G_a Antenna Gain(dB)	Peak EIRP (dBm)	Limit (dBm)	Margin (dB)	Polarization
154.80	-44.22	3.80	3.00	8.52	-39.50	-25.00	-14.50	H
237.50	-50.01	4.48	3.00	7.04	-47.45	-25.00	-22.45	H
561.31	-45.05	4.04	3.00	8.57	-40.51	-25.00	-15.51	V
904.29	-50.93	4.20	3.00	6.81	-48.32	-25.00	-23.32	V

LTE TDD Band 41_Channel Bandwidth 20MHz_16QAM_ High Channel

Frequency (MHz)	P_{Mea} (dBm)	P_{cl} (dB)	Diatance	G_a Antenna Gain(dB)	Peak EIRP (dBm)	Limit (dBm)	Margin (dB)	Polarization
153.13	-45.50	3.90	3.00	8.55	-40.84	-25.00	-15.84	H
241.87	-50.69	4.31	3.00	6.79	-48.21	-25.00	-23.21	H
557.95	-46.47	3.88	3.00	8.63	-41.72	-25.00	-16.72	V
898.96	-51.45	4.42	3.00	7.03	-48.84	-25.00	-23.84	V

LTE FDD Band 66_Channel Bandwidth 20MHz_QPSK _ Low Channel

Frequency (MHz)	P_{Mea} (dBm)	P_{cl} (dB)	Diatance	G_a Antenna Gain(dB)	Peak EIRP (dBm)	Limit (dBm)	Margin (dB)	Polarization
149.09	-46.03	3.98	3.00	8.48	-41.54	-13.00	-28.54	H
239.90	-45.72	4.24	3.00	6.99	-42.97	-13.00	-29.97	H
561.51	-41.68	3.99	3.00	8.47	-37.20	-13.00	-24.20	V
901.82	-43.46	4.27	3.00	7.04	-40.68	-13.00	-27.68	V

LTE FDD Band 66_Channel Bandwidth 20MHz_QPSK _ Middle Channel

Frequency (MHz)	P_{Mea} (dBm)	P_{cl} (dB)	Diatance	G_a Antenna Gain(dB)	Peak EIRP (dBm)	Limit (dBm)	Margin (dB)	Polarization
157.37	-46.04	3.72	3.00	8.36	-41.39	-13.00	-28.39	H
242.24	-46.80	4.41	3.00	6.96	-44.24	-13.00	-31.24	H
560.99	-42.69	3.94	3.00	8.36	-38.27	-13.00	-25.27	V
900.84	-44.48	4.12	3.00	6.84	-41.76	-13.00	-28.76	V

LTE FDD Band 66_Channel Bandwidth 20MHz_QPSK _ High Channel

Frequency (MHz)	P_{Mea} (dBm)	P_{cl} (dB)	Diatance	G_a Antenna Gain(dB)	Peak EIRP (dBm)	Limit (dBm)	Margin (dB)	Polarization
153.04	-47.39	3.70	3.00	8.50	-42.59	-13.00	-29.59	H
241.49	-45.80	4.10	3.00	6.81	-43.09	-13.00	-30.09	H
558.42	-44.27	3.69	3.00	8.61	-39.36	-13.00	-26.36	V
898.46	-45.03	4.48	3.00	6.81	-42.70	-13.00	-29.70	V

LTE FDD Band 66_Channel Bandwidth 20MHz_16QAM _ Low Channel

Frequency (MHz)	P_{Mea} (dBm)	P_{cl} (dB)	Diatance	G_a Antenna Gain(dB)	Peak EIRP (dBm)	Limit (dBm)	Margin (dB)	Polarization
156.19	-45.98	3.87	3.00	8.45	-41.40	-13.00	-28.40	H
235.82	-45.72	4.12	3.00	6.81	-43.04	-13.00	-30.04	H
558.70	-41.88	3.67	3.00	8.57	-36.98	-13.00	-23.98	V
902.40	-43.34	4.22	3.00	6.92	-40.64	-13.00	-27.64	V

LTE FDD Band 66_Channel Bandwidth 20MHz_16QAM _ Middle Channel

Frequency (MHz)	P_{Mea} (dBm)	P_{cl} (dB)	Diatance	G_a Antenna Gain(dB)	Peak EIRP (dBm)	Limit (dBm)	Margin (dB)	Polarization
156.46	-45.80	3.77	3.00	8.55	-41.02	-13.00	-28.02	H
239.35	-46.48	4.34	3.00	7.08	-43.74	-13.00	-30.74	H
552.51	-42.81	3.86	3.00	8.76	-37.92	-13.00	-24.92	V
897.37	-44.42	4.42	3.00	6.88	-41.96	-13.00	-28.96	V

LTE FDD Band 66_Channel Bandwidth 20MHz_16QAM _ High Channel

Frequency (MHz)	P_{Mea} (dBm)	P_{cl} (dB)	Diatance	G_a Antenna Gain(dB)	Peak EIRP (dBm)	Limit (dBm)	Margin (dB)	Polarization
155.29	-47.73	3.96	3.00	8.63	-43.06	-13.00	-30.06	H
241.19	-45.98	4.34	3.00	6.85	-43.48	-13.00	-30.48	H
556.75	-44.41	3.69	3.00	8.48	-39.62	-13.00	-26.62	V
904.36	-44.97	4.30	3.00	7.06	-42.21	-13.00	-29.21	V

For More than 1 GHZ:

LTE FDD Band 2_Channel Bandwidth 10MHz_QPSK_ Low Channel

Frequency (MHz)	P_{Mea} (dBm)	P_{cl} (dB)	Diatance	G_a Antenna Gain(dB)	Peak EIRP (dBm)	Limit (dBm)	Margin (dB)	Polarization
3704.80	-42.90	5.26	3.00	9.88	-38.28	-13.00	-25.28	H
5557.20	-49.27	6.11	3.00	11.36	-44.02	-13.00	-31.02	H
3704.80	-46.62	5.26	3.00	9.88	-42.00	-13.00	-29.00	V
5557.20	-51.70	6.11	3.00	11.36	-46.45	-13.00	-33.45	V

LTE FDD Band 2_Channel Bandwidth 10MHz_QPSK_ Middle Channel

Frequency (MHz)	P_{Mea} (dBm)	P_{cl} (dB)	Diatance	G_a Antenna Gain(dB)	Peak EIRP (dBm)	Limit (dBm)	Margin (dB)	Polarization
3760.00	-43.76	5.32	3.00	10.03	-39.05	-13.00	-26.05	H
5640.00	-47.76	6.19	3.00	11.41	-42.54	-13.00	-29.54	H
3760.00	-47.13	5.32	3.00	10.03	-42.42	-13.00	-29.42	V
5640.00	-51.01	6.19	3.00	11.41	-45.79	-13.00	-32.79	V

LTE FDD Band 2_Channel Bandwidth 10MHz_QPSK_ High Channel

Frequency (MHz)	P_{Mea} (dBm)	P_{cl} (dB)	Diatance	G_a Antenna Gain(dB)	Peak EIRP (dBm)	Limit (dBm)	Margin (dB)	Polarization
3760.00	-42.76	5.36	3.00	9.62	-38.50	-13.00	-25.50	H
5640.00	-46.41	6.24	3.00	11.46	-41.19	-13.00	-28.19	H
3760.00	-46.60	5.36	3.00	9.62	-42.34	-13.00	-29.34	V
5640.00	-51.45	6.24	3.00	11.46	-46.23	-13.00	-33.23	V

LTE FDD Band 2_Channel Bandwidth 10MHz_16QAM _ Low Channel

Frequency (MHz)	P_{Mea} (dBm)	P_{cl} (dB)	Diatance	G_a Antenna Gain(dB)	Peak EIRP (dBm)	Limit (dBm)	Margin (dB)	Polarization
3704.80	-42.82	5.26	3.00	9.88	-38.20	-13.00	-25.20	H
5557.20	-49.07	6.11	3.00	11.36	-43.82	-13.00	-30.82	H
3704.80	-46.71	5.26	3.00	9.88	-42.09	-13.00	-29.09	V
5557.20	-51.72	6.11	3.00	11.36	-46.47	-13.00	-33.47	V

LTE FDD Band 2_Channel Bandwidth 10MHz_16QAM _ Middle Channel

Frequency (MHz)	P_{Mea} (dBm)	P_{cl} (dB)	Diatance	G_a Antenna Gain(dB)	Peak EIRP (dBm)	Limit (dBm)	Margin (dB)	Polarization
3760.00	-43.64	5.32	3.00	10.03	-38.93	-13.00	-25.93	H
5640.00	-47.73	6.19	3.00	11.41	-42.51	-13.00	-29.51	H
3760.00	-47.02	5.32	3.00	10.03	-42.31	-13.00	-29.31	V
5640.00	-50.90	6.19	3.00	11.41	-45.68	-13.00	-32.68	V

LTE FDD Band 2_Channel Bandwidth 10MHz_16QAM _ High Channel

Frequency (MHz)	P_{Mea} (dBm)	P_{cl} (dB)	Diatance	G_a Antenna Gain(dB)	Peak EIRP (dBm)	Limit (dBm)	Margin (dB)	Polarization
3815.20	-42.75	5.36	3.00	9.62	-38.49	-13.00	-25.49	H
5722.80	-46.26	6.24	3.00	11.46	-41.04	-13.00	-28.04	H
3815.20	-46.76	5.36	3.00	9.62	-42.50	-13.00	-29.50	V
5722.80	-51.32	6.24	3.00	11.46	-46.10	-13.00	-33.10	V

LTE FDD Band 4_Channel Bandwidth 10MHz_QPSK_ Low Channel

Frequency (MHz)	P_{Mea} (dBm)	P_{cl} (dB)	Diatance	G_a Antenna Gain(dB)	Peak EIRP (dBm)	Limit (dBm)	Margin (dB)	Polarization
3424.80	-48.62	4.62	3.00	9.81	-43.43	-13.00	-30.43	H
5137.20	-52.04	5.94	3.00	10.86	-47.12	-13.00	-34.12	H
3424.80	-52.38	4.62	3.00	9.81	-47.19	-13.00	-34.19	V
5137.20	-54.97	5.94	3.00	10.86	-50.05	-13.00	-37.05	V

LTE FDD Band 4_Channel Bandwidth 10MHz_QPSK_ Middle Channel

Frequency (MHz)	P_{Mea} (dBm)	P_{cl} (dB)	Diatance	G_a Antenna Gain(dB)	Peak EIRP (dBm)	Limit (dBm)	Margin (dB)	Polarization
3465.20	-49.01	4.63	3.00	9.84	-43.80	-13.00	-30.80	H
5197.80	-52.46	5.94	3.00	10.86	-47.54	-13.00	-34.54	H
3465.20	-52.78	4.63	3.00	9.84	-47.57	-13.00	-34.57	V
5197.80	-55.29	5.94	3.00	10.86	-50.37	-13.00	-37.37	V

LTE FDD Band 4_Channel Bandwidth 10MHz_QPSK_ High Channel

Frequency (MHz)	P_{Mea} (dBm)	P_{cl} (dB)	Diatance	G_a Antenna Gain(dB)	Peak EIRP (dBm)	Limit (dBm)	Margin (dB)	Polarization
3505.20	-52.30	4.65	3.00	9.9	-47.05	-13.00	-34.05	H
5257.80	-53.29	5.95	3.00	10.91	-48.33	-13.00	-35.33	H
3505.20	-54.84	4.65	3.00	9.9	-49.59	-13.00	-36.59	V
5257.80	-56.16	5.95	3.00	10.91	-51.20	-13.00	-38.20	V

LTE FDD Band 4_Channel Bandwidth 10MHz_16QAM _ Low Channel

Frequency (MHz)	P_{Mea} (dBm)	P_{cl} (dB)	Diatance	G_a Antenna Gain(dB)	Peak EIRP (dBm)	Limit (dBm)	Margin (dB)	Polarization
3424.80	-48.36	4.62	3.00	9.81	-43.17	-13.00	-30.17	H
5137.20	-51.92	5.94	3.00	10.86	-47.00	-13.00	-34.00	H
3424.80	-52.59	4.62	3.00	9.81	-47.40	-13.00	-34.40	V
5137.20	-54.73	5.94	3.00	10.86	-49.81	-13.00	-36.81	V

LTE FDD Band 4_Channel Bandwidth 10MHz_16QAM _ Middle Channel

Frequency (MHz)	P_{Mea} (dBm)	P_{cl} (dB)	Diatance	G_a Antenna Gain(dB)	Peak EIRP (dBm)	Limit (dBm)	Margin (dB)	Polarization
3465.20	-48.76	4.63	3.00	9.84	-43.55	-13.00	-30.55	H
5197.80	-52.24	5.94	3.00	10.86	-47.32	-13.00	-34.32	H
3465.20	-52.67	4.63	3.00	9.84	-47.46	-13.00	-34.46	V
5197.80	-55.27	5.94	3.00	10.86	-50.35	-13.00	-37.35	V

LTE FDD Band 4_Channel Bandwidth 10MHz_16QAM _ High Channel

Frequency (MHz)	P_{Mea} (dBm)	P_{cl} (dB)	Diatance	G_a Antenna Gain(dB)	Peak EIRP (dBm)	Limit (dBm)	Margin (dB)	Polarization
3505.20	-52.06	4.65	3.00	9.9	-46.81	-13.00	-33.81	H
5257.80	-53.27	5.95	3.00	10.91	-48.31	-13.00	-35.31	H
3505.20	-55.11	4.65	3.00	9.9	-49.86	-13.00	-36.86	V
5257.80	-56.07	5.95	3.00	10.91	-51.11	-13.00	-38.11	V

LTE FDD Band 5_Channel Bandwidth 10MHz_QPSK_ Low Channel

Frequency (MHz)	P_{Mea} (dBm)	P_{cl} (dB)	Diatance	G_a Antenna Gain(dB)	Peak EIRP (dBm)	Limit (dBm)	Margin (dB)	Polarization
1658.00	-40.95	4.74	3.00	10.45	-35.24	-13.00	-22.24	H
2487.00	-46.50	5.65	3.00	12.32	-39.83	-13.00	-26.83	H
1658.00	-44.35	4.74	3.00	10.45	-38.64	-13.00	-25.64	V
2487.00	-49.67	5.65	3.00	12.32	-43.00	-13.00	-30.00	V

LTE FDD Band 5_Channel Bandwidth 10MHz_QPSK_ Middle Channel

Frequency (MHz)	P_{Mea} (dBm)	P_{cl} (dB)	Diatance	G_a Antenna Gain(dB)	Peak EIRP (dBm)	Limit (dBm)	Margin (dB)	Polarization
1673.00	-39.65	5.98	3.00	11.12	-34.51	-13.00	-21.51	H
2509.50	-47.13	6.45	3.00	12.02	-41.56	-13.00	-28.56	H
1673.00	-42.96	5.98	3.00	11.12	-37.82	-13.00	-24.82	V
2509.50	-47.85	6.45	3.00	12.02	-42.28	-13.00	-29.28	V

LTE FDD Band 5_Channel Bandwidth 10MHz_QPSK_ High Channel

Frequency (MHz)	P_{Mea} (dBm)	P_{cl} (dB)	Diatance	G_a Antenna Gain(dB)	Peak EIRP (dBm)	Limit (dBm)	Margin (dB)	Polarization
1688.00	-41.15	5.95	3.00	9.98	-37.12	-13.00	-24.12	H
2532.00	-46.84	6.63	3.00	11.66	-41.81	-13.00	-28.81	H
1688.00	-43.67	5.95	3.00	9.98	-39.64	-13.00	-26.64	V
2532.00	-49.35	6.63	3.00	11.66	-44.32	-13.00	-31.32	V

LTE FDD Band 5_Channel Bandwidth 10MHz_16QAM _ Low Channel

Frequency (MHz)	P_{Mea} (dBm)	P_{cl} (dB)	Diatance	G_a Antenna Gain(dB)	Peak EIRP (dBm)	Limit (dBm)	Margin (dB)	Polarization
1658.00	-40.92	4.74	3.00	10.45	-35.21	-13.00	-22.21	H
2487.00	-46.82	5.65	3.00	12.32	-40.15	-13.00	-27.15	H
1658.00	-44.44	4.74	3.00	10.45	-38.73	-13.00	-25.73	V
2487.00	-49.91	5.65	3.00	12.32	-43.24	-13.00	-30.24	V

LTE FDD Band 5_Channel Bandwidth 10MHz_16QAM _ Middle Channel

Frequency (MHz)	P_{Mea} (dBm)	P_{cl} (dB)	Diatance	G_a Antenna Gain(dB)	Peak EIRP (dBm)	Limit (dBm)	Margin (dB)	Polarization
1673.00	-39.67	5.98	3.00	11.12	-34.53	-13.00	-21.53	H
2509.50	-47.07	6.45	3.00	12.02	-41.50	-13.00	-28.50	H
1673.00	-42.91	5.98	3.00	11.12	-37.77	-13.00	-24.77	V
2509.50	-47.62	6.45	3.00	12.02	-42.05	-13.00	-29.05	V

LTE FDD Band 5_Channel Bandwidth 10MHz_16QAM _ High Channel

Frequency (MHz)	P_{Mea} (dBm)	P_{cl} (dB)	Diatance	G_a Antenna Gain(dB)	Peak EIRP (dBm)	Limit (dBm)	Margin (dB)	Polarization
1688.00	-41.12	5.95	3.00	9.98	-37.09	-13.00	-24.09	H
2532.00	-46.79	6.63	3.00	11.66	-41.76	-13.00	-28.76	H
1688.00	-43.76	5.95	3.00	9.98	-39.73	-13.00	-26.73	V
2532.00	-49.22	6.63	3.00	11.66	-44.19	-13.00	-31.19	V

LTE FDD Band 7_Channel Bandwidth 20MHz_QPSK_ Low Channel

Frequency (MHz)	P_{Mea} (dBm)	P_{cl} (dB)	Diatance	G_a Antenna Gain(dB)	Peak EIRP (dBm)	Limit (dBm)	Margin (dB)	Polarization
5020.0	-45.43	5.88	3.00	10.77	-40.54	-25.00	-15.54	H
7530.0	-48.02	7.12	3.00	12.26	-42.88	-25.00	-17.88	H
5020.0	-49.41	5.88	3.00	10.77	-44.52	-25.00	-19.52	V
7530.0	-53.79	7.12	3.00	12.26	-48.65	-25.00	-23.65	V

LTE FDD Band 7_Channel Bandwidth 20MHz_QPSK_ Middle Channel

Frequency (MHz)	P_{Mea} (dBm)	P_{cl} (dB)	Diatance	G_a Antenna Gain(dB)	Peak EIRP (dBm)	Limit (dBm)	Margin (dB)	Polarization
5070.0	-43.04	5.9	3.00	10.81	-38.13	-25.00	-13.13	H
7605.0	-45.64	7.19	3.00	12.32	-40.51	-25.00	-15.51	H
5070.0	-46.69	5.9	3.00	10.81	-41.78	-25.00	-16.78	V
7605.0	-49.38	7.19	3.00	12.32	-44.25	-25.00	-19.25	V

LTE FDD 7_Channel Bandwidth 20MHz_QPSK_ High Channel

Frequency (MHz)	P_{Mea} (dBm)	P_{cl} (dB)	Diatance	G_a Antenna Gain(dB)	Peak EIRP (dBm)	Limit (dBm)	Margin (dB)	Polarization
5120.0	-48.75	5.94	3.00	10.86	-43.83	-25.00	-18.83	H
7680.0	-54.41	7.25	3.00	12.98	-48.68	-25.00	-23.68	H
5120.0	-52.42	5.94	3.00	10.86	-47.50	-25.00	-22.50	V
7680.0	-57.08	7.25	3.00	12.98	-51.35	-25.00	-26.35	V

LTE FDD Band 7_Channel Bandwidth 20MHz_16QAM _ Low Channel

Frequency (MHz)	P_{Mea} (dBm)	P_{cl} (dB)	Diatance	G_a Antenna Gain(dB)	Peak EIRP (dBm)	Limit (dBm)	Margin (dB)	Polarization
5020.0	-45.59	5.88	3.00	10.77	-40.70	-25.00	-15.70	H
7530.0	-47.91	7.12	3.00	12.26	-42.77	-25.00	-17.77	H
5020.0	-49.40	5.88	3.00	10.77	-44.51	-25.00	-19.51	V
7530.0	-53.58	7.12	3.00	12.26	-48.44	-25.00	-23.44	V

LTE FDD Band 7_Channel Bandwidth 20MHz_16QAM _ Middle Channel

Frequency (MHz)	P_{Mea} (dBm)	P_{cl} (dB)	Diatance	G_a Antenna Gain(dB)	Peak EIRP (dBm)	Limit (dBm)	Margin (dB)	Polarization
5070.0	-43.24	5.9	3.00	10.81	-38.33	-25.00	-13.33	H
7605.0	-45.79	7.19	3.00	12.32	-40.66	-25.00	-15.66	H
5070.0	-47.00	5.9	3.00	10.81	-42.09	-25.00	-17.09	V
7605.0	-49.24	7.19	3.00	12.32	-44.11	-25.00	-19.11	V

LTE FDD Band 7_Channel Bandwidth 20MHz_16QAM _ High Channel

Frequency (MHz)	P_{Mea} (dBm)	P_{cl} (dB)	Diatance	G_a Antenna Gain(dB)	Peak EIRP (dBm)	Limit (dBm)	Margin (dB)	Polarization
5120.0	-48.85	5.94	3.00	10.86	-43.93	-25.00	-18.93	H
7680.0	-54.49	7.25	3.00	12.98	-48.76	-25.00	-23.76	H
5120.0	-52.48	5.94	3.00	10.86	-47.56	-25.00	-22.56	V
7680.0	-57.09	7.25	3.00	12.98	-51.36	-25.00	-26.36	V

LTE FDD Band 12_Channel Bandwidth 10MHz_QPSK _ Low Channel

Frequency (MHz)	P_{Mea} (dBm)	P_{cl} (dB)	Diatance	G_a Antenna Gain(dB)	Peak EIRP (dBm)	Limit (dBm)	Margin (dB)	Polarization
1408.00	-41.06	4.73	3.00	10.42	-35.37	-13.00	-22.37	H
2112.00	-47.64	5.64	3.00	12.30	-40.98	-13.00	-27.98	H
1408.00	-43.96	4.73	3.00	10.42	-38.27	-13.00	-25.27	V
2112.00	-50.49	5.64	3.00	12.30	-43.83	-13.00	-30.83	V

LTE FDD Band 12_Channel Bandwidth 10MHz_QPSK _ Middle Channel

Frequency (MHz)	P_{Mea} (dBm)	P_{cl} (dB)	Diatance	G_a Antenna Gain(dB)	Peak EIRP (dBm)	Limit (dBm)	Margin (dB)	Polarization
1415.00	-39.73	4.75	3.00	10.44	-34.04	-13.00	-21.04	H
2122.50	-44.36	5.66	3.00	12.33	-37.69	-13.00	-24.69	H
1415.00	-44.09	4.75	3.00	10.44	-38.40	-13.00	-25.40	V
2122.50	-47.91	5.66	3.00	12.33	-41.24	-13.00	-28.24	V

LTE FDD Band 12_Channel Bandwidth 10MHz_QPSK _ High Channel

Frequency (MHz)	P_{Mea} (dBm)	P_{cl} (dB)	Diatance	G_a Antenna Gain(dB)	Peak EIRP (dBm)	Limit (dBm)	Margin (dB)	Polarization
1422.00	-39.38	4.77	3.00	10.45	-33.70	-13.00	-20.70	H
2133.00	-44.40	5.69	3.00	12.36	-37.73	-13.00	-24.73	H
1422.00	-44.73	4.77	3.00	10.45	-39.05	-13.00	-26.05	V
2133.00	-50.22	5.69	3.00	12.36	-43.55	-13.00	-30.55	V

LTE FDD Band 12_Channel Bandwidth 10MHz_16QAM _ Low Channel

Frequency (MHz)	P_{Mea} (dBm)	P_{cl} (dB)	Diatance	G_a Antenna Gain(dB)	Peak EIRP (dBm)	Limit (dBm)	Margin (dB)	Polarization
1408.00	-41.02	4.73	3.00	10.42	-35.33	-13.00	-22.33	H
2112.00	-47.79	5.64	3.00	12.30	-41.13	-13.00	-28.13	H
1408.00	-43.81	4.73	3.00	10.42	-38.12	-13.00	-25.12	V
2112.00	-50.20	5.64	3.00	12.30	-43.54	-13.00	-30.54	V

LTE FDD Band 12_Channel Bandwidth 10MHz_16QAM _ Middle Channel

Frequency (MHz)	P_{Mea} (dBm)	P_{cl} (dB)	Diatance	G_a Antenna Gain(dB)	Peak EIRP (dBm)	Limit (dBm)	Margin (dB)	Polarization
1415.00	-40.10	4.75	3.00	10.44	-34.41	-13.00	-21.41	H
2122.50	-44.12	5.66	3.00	12.33	-37.45	-13.00	-24.45	H
1415.00	-43.83	4.75	3.00	10.44	-38.14	-13.00	-25.14	V
2122.50	-47.74	5.66	3.00	12.33	-41.07	-13.00	-28.07	V

LTE FDD Band 12_Channel Bandwidth 10MHz_16QAM _ High Channel

Frequency (MHz)	P_{Mea} (dBm)	P_{cl} (dB)	Diatance	G_a Antenna Gain(dB)	Peak EIRP (dBm)	Limit (dBm)	Margin (dB)	Polarization
1422.00	-39.58	4.77	3.00	10.45	-33.90	-13.00	-20.90	H
2133.00	-44.72	5.69	3.00	12.36	-38.05	-13.00	-25.05	H
1422.00	-44.67	4.77	3.00	10.45	-38.99	-13.00	-25.99	V
2133.00	-50.00	5.69	3.00	12.36	-43.33	-13.00	-30.33	V

LTE FDD Band 14_Channel Bandwidth 10MHz_QPSK _ Middle Channel

Frequency (MHz)	P_{Mea} (dBm)	P_{cl} (dB)	Diatance	G_a Antenna Gain(dB)	Peak EIRP (dBm)	Limit (dBm)	Margin (dB)	Polarization
1586.0	-50.42	4.99	3.00	11.12	-44.29	-40.00	-4.29	H
2379.0	-45.15	5.85	3.00	12.02	-38.98	-13.00	-25.98	H
1586.0	-52.50	4.99	3.00	11.12	-46.37	-40.00	-6.37	V
2379.0	-48.85	5.85	3.00	12.02	-42.68	-13.00	-29.68	V

LTE FDD Band 14_Channel Bandwidth 10MHz_16QAM_ Middle Channel

Frequency (MHz)	P_{Mea} (dBm)	P_{cl} (dB)	Diatance	G_a Antenna Gain(dB)	Peak EIRP (dBm)	Limit (dBm)	Margin (dB)	Polarization
1586.0	-50.61	4.99	3.00	11.12	-44.48	-40.00	-4.48	H
2379.0	-45.16	5.85	3.00	12.02	-38.99	-13.00	-25.99	H
1586.0	-52.41	4.99	3.00	11.12	-46.28	-40.00	-6.28	V
2379.0	-48.78	5.85	3.00	12.02	-42.61	-13.00	-29.61	V

LTE FDD Band 17_Channel Bandwidth 10MHz_QPSK_ Low Channel

Frequency (MHz)	P_{Mea} (dBm)	P_{cl} (dB)	Diatance	G_a Antenna Gain(dB)	Peak EIRP (dBm)	Limit (dBm)	Margin (dB)	Polarization
1418.0	-54.90	3.72	3.00	9.04	-49.58	-13.00	-36.58	H
2127.0	-60.36	4.23	3.00	8.60	-55.99	-13.00	-42.99	H
1418.0	-49.94	3.72	3.00	9.04	-44.62	-13.00	-31.62	V
2127.0	-55.69	4.23	3.00	8.60	-51.32	-13.00	-38.32	V

LTE FDD Band 17_Channel Bandwidth 10MHz_QPSK_ Middle Channel

Frequency (MHz)	P_{Mea} (dBm)	P_{cl} (dB)	Diatance	G_a Antenna Gain(dB)	Peak EIRP (dBm)	Limit (dBm)	Margin (dB)	Polarization
1420.0	-53.94	4.78	3.00	8.91	-49.81	-13.00	-36.81	H
2130.0	-59.28	4.25	3.00	8.26	-55.27	-13.00	-42.27	H
1420.0	-49.03	4.78	3.00	8.91	-44.90	-13.00	-31.90	V
2130.0	-54.29	4.25	3.00	8.26	-50.28	-13.00	-37.28	V

LTE FDD Band 17_Channel Bandwidth 10MHz_QPSK_ High Channel

Frequency (MHz)	P_{Mea} (dBm)	P_{cl} (dB)	Diatance	G_a Antenna Gain(dB)	Peak EIRP (dBm)	Limit (dBm)	Margin (dB)	Polarization
1422.0	-55.30	4.78	3.00	8.91	-51.17	-13.00	-38.17	H
2133.0	-58.88	4.25	3.00	8.26	-54.87	-13.00	-41.87	H
1422.0	-51.59	4.78	3.00	8.91	-47.46	-13.00	-34.46	V
2133.0	-54.05	4.25	3.00	8.26	-50.04	-13.00	-37.04	V

LTE FDD Band 17_Channel Bandwidth 10MHz_16QAM _ Low Channel

Frequency (MHz)	P_{Mea} (dBm)	P_{cl} (dB)	Diatance	G_a Antenna Gain(dB)	Peak EIRP (dBm)	Limit (dBm)	Margin (dB)	Polarization
1418.0	-55.01	3.72	3.00	9.04	-49.69	-13.00	-36.69	H
2127.0	-60.35	4.23	3.00	8.60	-55.98	-13.00	-42.98	H
1418.0	-50.04	3.72	3.00	9.04	-44.72	-13.00	-31.72	V
2127.0	-55.69	4.23	3.00	8.60	-51.32	-13.00	-38.32	V

LTE FDD Band 17_Channel Bandwidth 10MHz_16QAM _ Middle Channel

Frequency (MHz)	P_{Mea} (dBm)	P_{cl} (dB)	Diatance	G_a Antenna Gain(dB)	Peak EIRP (dBm)	Limit (dBm)	Margin (dB)	Polarization
1420.0	-54.12	4.78	3.00	8.91	-49.99	-13.00	-36.99	H
2130.0	-59.16	4.25	3.00	8.26	-55.15	-13.00	-42.15	H
1420.0	-49.18	4.78	3.00	8.91	-45.05	-13.00	-32.05	V
2130.0	-54.37	4.25	3.00	8.26	-50.36	-13.00	-37.36	V

LTE FDD Band 17_Channel Bandwidth 10MHz_16QAM _ High Channel

Frequency (MHz)	P_{Mea} (dBm)	P_{cl} (dB)	Diatance	G_a Antenna Gain(dB)	Peak EIRP (dBm)	Limit (dBm)	Margin (dB)	Polarization
1422.0	-55.13	4.78	3.00	8.91	-51.00	-13.00	-38.00	H
2133.0	-58.68	4.25	3.00	8.26	-54.67	-13.00	-41.67	H
1422.0	-51.73	4.78	3.00	8.91	-47.60	-13.00	-34.60	V
2133.0	-53.79	4.25	3.00	8.26	-49.78	-13.00	-36.78	V

LTE FDD Band 25_Channel Bandwidth 20MHz_QPSK_ Low Channel

Frequency (MHz)	P_{Mea} (dBm)	P_{cl} (dB)	Diatance	G_a Antenna Gain(dB)	Peak EIRP (dBm)	Limit (dBm)	Margin (dB)	Polarization
3715.00	-42.88	5.26	3.00	9.88	-38.26	-13.00	-25.26	H
5572.50	-49.22	6.11	3.00	11.36	-43.97	-13.00	-30.97	H
3715.00	-46.48	5.26	3.00	9.88	-41.86	-13.00	-28.86	V
5572.50	-51.82	6.11	3.00	11.36	-46.57	-13.00	-33.57	V

LTE FDD Band 25_Channel Bandwidth 20MHz_QPSK_ Middle Channel

Frequency (MHz)	P_{Mea} (dBm)	P_{cl} (dB)	Diatance	G_a Antenna Gain(dB)	Peak EIRP (dBm)	Limit (dBm)	Margin (dB)	Polarization
3765.00	-43.76	5.32	3.00	10.03	-39.05	-13.00	-26.05	H
5647.50	-47.91	6.19	3.00	11.41	-42.69	-13.00	-29.69	H
3765.00	-47.01	5.32	3.00	10.03	-42.30	-13.00	-29.30	V
5647.50	-50.92	6.19	3.00	11.41	-45.70	-13.00	-32.70	V

LTE FDD Band 25_Channel Bandwidth 20MHz_QPSK_ High Channel

Frequency (MHz)	P_{Mea} (dBm)	P_{cl} (dB)	Diatance	G_a Antenna Gain(dB)	Peak EIRP (dBm)	Limit (dBm)	Margin (dB)	Polarization
3810.00	-42.63	5.36	3.00	9.62	-38.37	-13.00	-25.37	H
5715.00	-45.99	6.24	3.00	11.46	-40.77	-13.00	-27.77	H
3810.00	-46.89	5.36	3.00	9.62	-42.63	-13.00	-29.63	V
5715.00	-51.60	6.24	3.00	11.46	-46.38	-13.00	-33.38	V

LTE FDD Band 25_Channel Bandwidth 20MHz_16QAM _ Low Channel

Frequency (MHz)	P_{Mea} (dBm)	P_{cl} (dB)	Diatance	G_a Antenna Gain(dB)	Peak EIRP (dBm)	Limit (dBm)	Margin (dB)	Polarization
3715.00	-42.99	5.26	3.00	9.88	-38.37	-13.00	-25.37	H
5572.50	-49.26	6.11	3.00	11.36	-44.01	-13.00	-31.01	H
3715.00	-46.67	5.26	3.00	9.88	-42.05	-13.00	-29.05	V
5572.50	-51.96	6.11	3.00	11.36	-46.71	-13.00	-33.71	V

LTE FDD Band 25_Channel Bandwidth 20MHz_16QAM _ Middle Channel

Frequency (MHz)	P_{Mea} (dBm)	P_{cl} (dB)	Diatance	G_a Antenna Gain(dB)	Peak EIRP (dBm)	Limit (dBm)	Margin (dB)	Polarization
3765.00	-43.81	5.32	3.00	10.03	-39.10	-13.00	-26.10	H
5647.50	-47.80	6.19	3.00	11.41	-42.58	-13.00	-29.58	H
3765.00	-47.22	5.32	3.00	10.03	-42.51	-13.00	-29.51	V
5647.50	-51.14	6.19	3.00	11.41	-45.92	-13.00	-32.92	V

LTE FDD Band 25_Channel Bandwidth 20MHz_16QAM _ High Channel

Frequency (MHz)	P_{Mea} (dBm)	P_{cl} (dB)	Diatance	G_a Antenna Gain(dB)	Peak EIRP (dBm)	Limit (dBm)	Margin (dB)	Polarization
3810.00	-42.94	5.36	3.00	9.62	-38.68	-13.00	-25.68	H
5715.00	-46.26	6.24	3.00	11.46	-41.04	-13.00	-28.04	H
3810.00	-46.81	5.36	3.00	9.62	-42.55	-13.00	-29.55	V
5715.00	-51.39	6.24	3.00	11.46	-46.17	-13.00	-33.17	V

LTE FDD Band 26(814-824MHz)_Channel Bandwidth 5MHz_QPSK_ Low Channel

Frequency (MHz)	P_{Mea} (dBm)	P_{cl} (dB)	Diatance	G_a Antenna Gain(dB)	Peak EIRP (dBm)	Limit (dBm)	Margin (dB)	Polarization
1633.00	-41.16	4.62	3.00	9.81	-35.97	-13.00	-22.97	H
2449.50	-47.50	5.94	3.00	10.86	-42.58	-13.00	-29.58	H
1633.00	-43.77	4.62	3.00	9.81	-38.58	-13.00	-25.58	V
2449.50	-50.26	5.94	3.00	10.86	-45.34	-13.00	-32.34	V

LTE FDD Band 26(814-824MHz)_Channel Bandwidth 5MHz_QPSK_ Middle Channel

Frequency (MHz)	P_{Mea} (dBm)	P_{cl} (dB)	Diatance	G_a Antenna Gain(dB)	Peak EIRP (dBm)	Limit (dBm)	Margin (dB)	Polarization
1638.00	-39.81	4.63	3.00	9.84	-34.60	-13.00	-21.60	H
2457.00	-47.20	5.94	3.00	10.86	-42.28	-13.00	-29.28	H
1638.00	-43.32	4.63	3.00	9.84	-38.11	-13.00	-25.11	V
2457.00	-47.57	5.94	3.00	10.86	-42.65	-13.00	-29.65	V

LTE FDD Band 26(814-824MHz)_Channel Bandwidth 5MHz_QPSK_ High Channel

Frequency (MHz)	P_{Mea} (dBm)	P_{cl} (dB)	Diatance	G_a Antenna Gain(dB)	Peak EIRP (dBm)	Limit (dBm)	Margin (dB)	Polarization
1643.00	-40.95	4.65	3.00	9.90	-35.70	-13.00	-22.70	H
2464.50	-46.83	5.95	3.00	10.91	-41.87	-13.00	-28.87	H
1643.00	-43.63	4.65	3.00	9.90	-38.38	-13.00	-25.38	V
2464.50	-49.24	5.95	3.00	10.91	-44.28	-13.00	-31.28	V

LTE FDD Band 26(814-824MHz)_Channel Bandwidth 5MHz_16QAM _ Low Channel

Frequency (MHz)	P_{Mea} (dBm)	P_{cl} (dB)	Diatance	G_a Antenna Gain(dB)	Peak EIRP (dBm)	Limit (dBm)	Margin (dB)	Polarization
1633.00	-41.14	4.62	3.00	9.81	-35.95	-13.00	-22.95	H
2449.50	-47.27	5.94	3.00	10.86	-42.35	-13.00	-29.35	H
1633.00	-43.92	4.62	3.00	9.81	-38.73	-13.00	-25.73	V
2449.50	-50.22	5.94	3.00	10.86	-45.30	-13.00	-32.30	V

LTE FDD Band 26(814-824MHz)_Channel Bandwidth 5MHz_16QAM _ Middle Channel

Frequency (MHz)	P_{Mea} (dBm)	P_{cl} (dB)	Diatance	G_a Antenna Gain(dB)	Peak EIRP (dBm)	Limit (dBm)	Margin (dB)	Polarization
1638.00	-39.99	4.63	3.00	9.84	-34.78	-13.00	-21.78	H
2457.00	-47.20	5.94	3.00	10.86	-42.28	-13.00	-29.28	H
1638.00	-43.08	4.63	3.00	9.84	-37.87	-13.00	-24.87	V
2457.00	-47.65	5.94	3.00	10.86	-42.73	-13.00	-29.73	V

LTE FDD Band 26(814-824MHz)_Channel Bandwidth 5MHz_16QAM _ High Channel

Frequency (MHz)	P_{Mea} (dBm)	P_{cl} (dB)	Diatance	G_a Antenna Gain(dB)	Peak EIRP (dBm)	Limit (dBm)	Margin (dB)	Polarization
1643.00	-41.20	4.65	3.00	9.90	-35.95	-13.00	-22.95	H
2464.50	-47.13	5.95	3.00	10.91	-42.17	-13.00	-29.17	H
1643.00	-43.81	4.65	3.00	9.90	-38.56	-13.00	-25.56	V
2464.50	-49.55	5.95	3.00	10.91	-44.59	-13.00	-31.59	V

LTE FDD Band 26(824-849MHz)_Channel Bandwidth 15MHz_QPSK_ Low Channel

Frequency (MHz)	P_{Mea} (dBm)	P_{cl} (dB)	Diatance	G_a Antenna Gain(dB)	Peak EIRP (dBm)	Limit (dBm)	Margin (dB)	Polarization
1663.00	-41.00	4.62	3.00	9.81	-35.81	-13.00	-22.81	H
2494.50	-47.52	5.94	3.00	10.86	-42.60	-13.00	-29.60	H
1663.00	-43.68	4.62	3.00	9.81	-38.49	-13.00	-25.49	V
2494.50	-50.29	5.94	3.00	10.86	-45.37	-13.00	-32.37	V

LTE FDD Band 26(824-849MHz)_Channel Bandwidth 15MHz_QPSK_ Middle Channel

Frequency (MHz)	P_{Mea} (dBm)	P_{cl} (dB)	Diatance	G_a Antenna Gain(dB)	Peak EIRP (dBm)	Limit (dBm)	Margin (dB)	Polarization
1673.00	-39.83	4.63	3.00	9.84	-34.62	-13.00	-21.62	H
2509.50	-46.98	5.94	3.00	10.86	-42.06	-13.00	-29.06	H
1673.00	-43.14	4.63	3.00	9.84	-37.93	-13.00	-24.93	V
2509.50	-47.35	5.94	3.00	10.86	-42.43	-13.00	-29.43	V

LTE FDD Band 26(824-849MHz)_Channel Bandwidth 15MHz_QPSK_ High Channel

Frequency (MHz)	P_{Mea} (dBm)	P_{cl} (dB)	Diatance	G_a Antenna Gain(dB)	Peak EIRP (dBm)	Limit (dBm)	Margin (dB)	Polarization
1683.00	-41.19	4.65	3.00	9.90	-35.94	-13.00	-22.94	H
2524.50	-46.96	5.95	3.00	10.91	-42.00	-13.00	-29.00	H
1683.00	-43.63	4.65	3.00	9.90	-38.38	-13.00	-25.38	V
2524.50	-49.56	5.95	3.00	10.91	-44.60	-13.00	-31.60	V

LTE FDD Band 26(824-849MHz)_Channel Bandwidth 15MHz_16QAM_ Low Channel

Frequency (MHz)	P_{Mea} (dBm)	P_{cl} (dB)	Diatance	G_a Antenna Gain(dB)	Peak EIRP (dBm)	Limit (dBm)	Margin (dB)	Polarization
1663.00	-40.96	4.62	3.00	9.81	-35.77	-13.00	-22.77	H
2494.50	-47.29	5.94	3.00	10.86	-42.37	-13.00	-29.37	H
1663.00	-43.71	4.62	3.00	9.81	-38.52	-13.00	-25.52	V
2494.50	-50.36	5.94	3.00	10.86	-45.44	-13.00	-32.44	V

LTE FDD Band 26(824-849MHz)_Channel Bandwidth 15MHz_16QAM_ Middle Channel

Frequency (MHz)	P_{Mea} (dBm)	P_{cl} (dB)	Diatance	G_a Antenna Gain(dB)	Peak EIRP (dBm)	Limit (dBm)	Margin (dB)	Polarization
1673.00	-39.99	4.63	3.00	9.84	-34.78	-13.00	-21.78	H
2509.50	-46.90	5.94	3.00	10.86	-41.98	-13.00	-28.98	H
1673.00	-43.22	4.63	3.00	9.84	-38.01	-13.00	-25.01	V
2509.50	-47.33	5.94	3.00	10.86	-42.41	-13.00	-29.41	V

LTE FDD Band 26(824-849MHz)_Channel Bandwidth 15MHz_16QAM_ High Channel

Frequency (MHz)	P_{Mea} (dBm)	P_{cl} (dB)	Diatance	G_a Antenna Gain(dB)	Peak EIRP (dBm)	Limit (dBm)	Margin (dB)	Polarization
1683.00	-41.17	4.65	3.00	9.90	-35.92	-13.00	-22.92	H
2524.50	-46.84	5.95	3.00	10.91	-41.88	-13.00	-28.88	H
1683.00	-43.56	4.65	3.00	9.90	-38.31	-13.00	-25.31	V
2524.50	-49.43	5.95	3.00	10.91	-44.47	-13.00	-31.47	V

LTE TDD Band 41_Channel Bandwidth 20MHz_QPSK_ Low Channel

Frequency (MHz)	P_{Mea} (dBm)	P_{cl} (dB)	Diatance	G_a Antenna Gain(dB)	Peak EIRP (dBm)	Limit (dBm)	Margin (dB)	Polarization
5012.00	-40.23	7.15	3.00	9.88	-37.50	-25.00	-12.50	H
7518.00	-45.56	8.36	3.00	11.36	-42.56	-25.00	-17.56	H
5012.00	-42.30	7.15	3.00	9.88	-39.57	-25.00	-14.57	V
7518.00	-47.35	8.36	3.00	11.36	-44.35	-25.00	-19.35	V

LTE TDD Band 41_Channel Bandwidth 20MHz_QPSK_ Middle Channel

Frequency (MHz)	P_{Mea} (dBm)	P_{cl} (dB)	Diatance	G_a Antenna Gain(dB)	Peak EIRP (dBm)	Limit (dBm)	Margin (dB)	Polarization
5186.00	-40.27	7.26	3.00	10.03	-37.50	-25.00	-12.50	H
7779.00	-44.97	8.48	3.00	11.41	-42.04	-25.00	-17.04	H
5186.00	-43.84	7.26	3.00	10.03	-41.07	-25.00	-16.07	V
7779.00	-47.47	8.48	3.00	11.41	-44.54	-25.00	-19.54	V

LTE TDD Band 41_Channel Bandwidth 20MHz_QPSK_ High Channel

Frequency (MHz)	P_{Mea} (dBm)	P_{cl} (dB)	Diatance	G_a Antenna Gain(dB)	Peak EIRP (dBm)	Limit (dBm)	Margin (dB)	Polarization
5360.00	-42.24	7.17	3.00	9.62	-39.79	-25.00	-14.79	H
8040.00	-45.64	8.39	3.00	11.46	-42.57	-25.00	-17.57	H
5360.00	-43.04	7.17	3.00	9.62	-40.59	-25.00	-15.59	V
8040.00	-47.79	8.39	3.00	11.46	-44.72	-25.00	-19.72	V

LTE TDD Band 41_Channel Bandwidth 20MHz_16QAM_ Low Channel

Frequency (MHz)	P_{Mea} (dBm)	P_{cl} (dB)	Diatance	G_a Antenna Gain(dB)	Peak EIRP (dBm)	Limit (dBm)	Margin (dB)	Polarization
5012.00	-39.96	7.15	3.00	9.88	-37.23	-25.00	-12.23	H
7518.00	-45.42	8.36	3.00	11.36	-42.42	-25.00	-17.42	H
5012.00	-42.28	7.15	3.00	9.88	-39.55	-25.00	-14.55	V
7518.00	-47.41	8.36	3.00	11.36	-44.41	-25.00	-19.41	V

LTE TDD Band 41_Channel Bandwidth 20MHz_16QAM_ Middle Channel

Frequency (MHz)	P_{Mea} (dBm)	P_{cl} (dB)	Diatance	G_a Antenna Gain(dB)	Peak EIRP (dBm)	Limit (dBm)	Margin (dB)	Polarization
5186.00	-40.33	7.26	3.00	10.03	-37.56	-25.00	-12.56	H
7779.00	-45.30	8.48	3.00	11.41	-42.37	-25.00	-17.37	H
5186.00	-44.02	7.26	3.00	10.03	-41.25	-25.00	-16.25	V
7779.00	-47.58	8.48	3.00	11.41	-44.65	-25.00	-19.65	V

LTE TDD Band 41_Channel Bandwidth 20MHz_16QAM_ High Channel

Frequency (MHz)	P_{Mea} (dBm)	P_{cl} (dB)	Diatance	G_a Antenna Gain(dB)	Peak EIRP (dBm)	Limit (dBm)	Margin (dB)	Polarization
5360.00	-42.10	7.17	3.00	9.62	-39.65	-25.00	-14.65	H
8040.00	-45.40	8.39	3.00	11.46	-42.33	-25.00	-17.33	H
5360.00	-43.00	7.17	3.00	9.62	-40.55	-25.00	-15.55	V
8040.00	-47.85	8.39	3.00	11.46	-44.78	-25.00	-19.78	V

LTE FDD Band 66_Channel Bandwidth 20MHz_QPSK _ Low Channel

Frequency (MHz)	P_{Mea} (dBm)	P_{cl} (dB)	Diatance	G_a Antenna Gain(dB)	Peak EIRP (dBm)	Limit (dBm)	Margin (dB)	Polarization
3440.0	-40.00	6.23	3.00	9.35	-36.88	-13.00	-23.88	H
5160.0	-45.58	7.48	3.00	10.72	-42.34	-13.00	-29.34	H
3440.0	-42.34	6.23	3.00	9.35	-39.22	-13.00	-26.22	V
5160.0	-47.52	7.48	3.00	10.72	-44.28	-13.00	-31.28	V

LTE FDD Band 66_Channel Bandwidth 20MHz_QPSK _ Middle Channel

Frequency (MHz)	P_{Mea} (dBm)	P_{cl} (dB)	Diatance	G_a Antenna Gain(dB)	Peak EIRP (dBm)	Limit (dBm)	Margin (dB)	Polarization
3490.0	-40.16	6.37	3.00	9.45	-37.08	-13.00	-24.08	H
5235.0	-45.34	7.54	3.00	10.81	-42.07	-13.00	-29.07	H
3490.0	-43.75	6.37	3.00	9.45	-40.67	-13.00	-27.67	V
5235.0	-47.78	7.54	3.00	10.81	-44.51	-13.00	-31.51	V

LTE FDD Band 66_Channel Bandwidth 20MHz_QPSK _ High Channel

Frequency (MHz)	P_{Mea} (dBm)	P_{cl} (dB)	Diatance	G_a Antenna Gain(dB)	Peak EIRP (dBm)	Limit (dBm)	Margin (dB)	Polarization
3540.0	-42.09	6.55	3.00	9.51	-39.13	-13.00	-26.13	H
5310.0	-45.41	7.63	3.00	10.93	-42.11	-13.00	-29.11	H
3540.0	-42.87	6.55	3.00	9.51	-39.91	-13.00	-26.91	V
5310.0	-47.71	7.63	3.00	10.93	-44.41	-13.00	-31.41	V

LTE FDD Band 66_Channel Bandwidth 20MHz_16QAM _ Low Channel

Frequency (MHz)	P_{Mea} (dBm)	P_{cl} (dB)	Diatance	G_a Antenna Gain(dB)	Peak EIRP (dBm)	Limit (dBm)	Margin (dB)	Polarization
3440.0	-40.00	6.23	3.00	9.35	-36.88	-13.00	-23.88	H
5160.0	-45.46	7.48	3.00	10.72	-42.22	-13.00	-29.22	H
3440.0	-42.38	6.23	3.00	9.35	-39.26	-13.00	-26.26	V
5160.0	-47.29	7.48	3.00	10.72	-44.05	-13.00	-31.05	V

LTE FDD Band 66_Channel Bandwidth 20MHz_16QAM _ Middle Channel

Frequency (MHz)	P_{Mea} (dBm)	P_{cl} (dB)	Diatance	G_a Antenna Gain(dB)	Peak EIRP (dBm)	Limit (dBm)	Margin (dB)	Polarization
3490.0	-40.14	6.37	3.00	9.45	-37.06	-13.00	-24.06	H
5235.0	-45.29	7.54	3.00	10.81	-42.02	-13.00	-29.02	H
3490.0	-43.93	6.37	3.00	9.45	-40.85	-13.00	-27.85	V
5235.0	-47.45	7.54	3.00	10.81	-44.18	-13.00	-31.18	V

LTE FDD Band 66_Channel Bandwidth 20MHz_16QAM _ High Channel

Frequency (MHz)	P_{Mea} (dBm)	P_{cl} (dB)	Diatance	G_a Antenna Gain(dB)	Peak EIRP (dBm)	Limit (dBm)	Margin (dB)	Polarization
3540.0	-42.28	6.55	3.00	9.51	-39.32	-13.00	-26.32	H
5310.0	-45.56	7.63	3.00	10.93	-42.26	-13.00	-29.26	H
3540.0	-43.12	6.55	3.00	9.51	-40.16	-13.00	-27.16	V
5310.0	-47.63	7.63	3.00	10.93	-44.33	-13.00	-31.33	V

Notes:
1.All channel bandwidth were tested,the report recorded the worst data.
2. EIRP=PMea(dBm)-Pcl(dB)+PAg(dB)+Ga(dBi)
3. ERP = EIRP – 2.15dBi as EIRP by subtracting the gain of the dipole.
4. Margin = EIRP – Limit
5. We measured all modes and only recorded the worst case.

4.6 Frequency Stability under Temperature & Voltage Variations

LIMIT

FCC § 2.1055 (a), § 2.1055 (d), §22.355, §24.235,§27.54 &§90.213

TEST CONFIGURATION

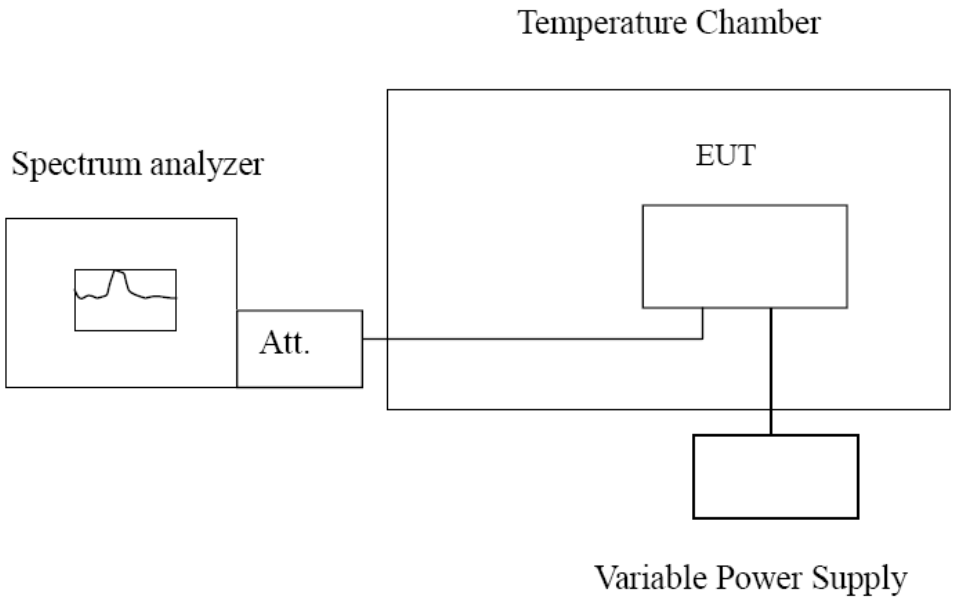

TEST PROCEDURE

The EUT was setup according to EIA/TIA 603D

Frequency Stability Under Temperature Variations:
In order to measure the carrier frequency under the condition of AFC lock, it is necessary to make measurements with the EUT in a “call mode”. This is accomplished with the use of R&S CMW500 DIGITAL RADIO COMMUNICATION TESTER.
1. Measure the carrier frequency at room temperature.
2. Subject the EUT to overnight soak at -30℃.
3. With the EUT, powered via nominal voltage, connected to the CMW500 and in a simulated call on middle channel for LTE band 5, measure the carrier frequency. These measurements should be made within 2 minutes of Powering up the EUT, to prevent significant self-warming.
4. Repeat the above measurements at 10℃ increments from -30℃ to +50℃. Allow at least 1.5 hours at each temperature, unpowered, before making measurements.
5. Re-measure carrier frequency at room temperature with nominal voltage. Vary supply voltage from minimum voltage to maximum voltage, in 0.1Volt increments re-measuring carrier frequency at each voltage. Pause at nominal voltage for 1.5 hours unpowered, to allow any self-heating to stabilize, before continuing.
6. Subject the EUT to overnight soak at +50℃.
7. With the EUT, powered via nominal voltage, connected to the CMW500 and in a simulated call on the centre channel, measure the carrier frequency. These measurements should be made within 2 minutes of Powering up the EUT, to prevent significant self-warming.
8. Repeat the above measurements at 10 ℃ increments from +50℃ to -30℃. Allow at least 1.5 hours at each temperature, unpowered, before making measurements
9. At all temperature levels hold the temperature to +/- 0.5℃ during the measurement procedure.
Frequency Stability Under Voltage Variations:
Set chamber temperature to 20℃. Use a variable AC power supply / DC power source to power the EUT and set the voltage to rated voltage. Set the spectrum analyzer RBW low enough to obtain the desired frequency resolution and recorded the frequency.
Reduce the input voltage to specify extreme voltage variation (±15%) and endpoint, record the maximum frequency change.

TEST RESULTS

Remark:

We were tested all RB Configuration refer 3GPP TS136 521 for each Channel Bandwidth of LTE FDD Band 2, LTE FDD Band 4, LTE FDD Band 5, LTE FDD Band 7, LTE FDD Band 12, LTE FDD Band 14, LTE FDD Band 17, LTE FDD Band 25, LTE FDD Band 26, LTE TDD Band 41, LTE FDD Band 66 ; recorded worst case for each Channel Bandwidth of LTE FDD Band 2, LTE FDD Band 4, LTE FDD Band 5, LTE FDD Band 7, LTE FDD Band 12, LTE FDD Band 14, LTE FDD Band 17, LTE FDD Band 25, LTE FDD Band 26, LTE TDD Band 41, LTE FDD Band 66;

Temperature	24.5℃	Humidity	53.7%
Test Engineer	Lushan Kong	Configurations	LTE

LTE Band 2, QPSK, 1.4MHz bandwidth(worst case of all bandwidths)

LTE FDD Band 2					
DC Power	Temperature (℃)	Frequency error(Hz)	Frequency error(ppm)	Limit (ppm)	Verdict
DC 4.3V	20	63	0.034	±2.50	PASS
DC 3.5V	20	1	0.001	±2.50	PASS
DC 3.87V	20	66	0.035	±2.50	PASS
DC 3.87V	-30	85	0.045	±2.50	PASS
DC 3.87V	-20	5	0.003	±2.50	PASS
DC 3.87V	-10	36	0.019	±2.50	PASS
DC 3.87V	0	86	0.046	±2.50	PASS
DC 3.87V	10	99	0.053	±2.50	PASS
DC 3.87V	20	7	0.004	±2.50	PASS
DC 3.87V	30	74	0.039	±2.50	PASS
DC 3.87V	40	44	0.023	±2.50	PASS
DC 3.87V	50	56	0.030	±2.50	PASS

LTE Band 2, 16QAM, 1.4MHz bandwidth(worst case of all bandwidths)

LTE FDD Band 2					
DC Power	Temperature (℃)	Frequency error(Hz)	Frequency error(ppm)	Limit (ppm)	Verdict
DC 4.3V	20	96	0.051	±2.50	PASS
DC 3.5V	20	96	0.051	±2.50	PASS
DC 3.87V	20	19	0.010	±2.50	PASS
DC 3.87V	-30	14	0.007	±2.50	PASS
DC 3.87V	-20	99	0.053	±2.50	PASS
DC 3.87V	-10	31	0.016	±2.50	PASS
DC 3.87V	0	3	0.002	±2.50	PASS
DC 3.87V	10	87	0.046	±2.50	PASS
DC 3.87V	20	52	0.028	±2.50	PASS
DC 3.87V	30	63	0.034	±2.50	PASS
DC 3.87V	40	21	0.011	±2.50	PASS
DC 3.87V	50	29	0.015	±2.50	PASS

LTE Band 4, QPSK, 1.4MHz bandwidth(worst case of all bandwidths)

LTE FDD Band 4					
DC Power	Temperature (℃)	Frequency error(Hz)	Frequency error(ppm)	Limit (ppm)	Verdict
DC 4.3V	20	95	0.054	±2.50	PASS
DC 3.5V	20	49	0.028	±2.50	PASS
DC 3.87V	20	11	0.006	±2.50	PASS
DC 3.87V	-30	34	0.019	±2.50	PASS
DC 3.87V	-20	38	0.022	±2.50	PASS
DC 3.87V	-10	94	0.054	±2.50	PASS
DC 3.87V	0	72	0.041	±2.50	PASS
DC 3.87V	10	91	0.052	±2.50	PASS
DC 3.87V	20	99	0.057	±2.50	PASS
DC 3.87V	30	2	0.001	±2.50	PASS
DC 3.87V	40	5	0.003	±2.50	PASS
DC 3.87V	50	46	0.026	±2.50	PASS

LTE Band 4, 16QAM, 1.4MHz bandwidth(worst case of all bandwidths)

LTE FDD Band 4					
DC Power	Temperature (℃)	Frequency error(Hz)	Frequency error(ppm)	Limit (ppm)	Verdict
DC 4.3V	20	5	0.003	±2.50	PASS
DC 3.5V	20	44	0.025	±2.50	PASS
DC 3.87V	20	80	0.046	±2.50	PASS
DC 3.87V	-30	15	0.009	±2.50	PASS
DC 3.87V	-20	6	0.003	±2.50	PASS
DC 3.87V	-10	35	0.020	±2.50	PASS
DC 3.87V	0	15	0.009	±2.50	PASS
DC 3.87V	10	34	0.019	±2.50	PASS
DC 3.87V	20	1	0.001	±2.50	PASS
DC 3.87V	30	68	0.039	±2.50	PASS
DC 3.87V	40	96	0.055	±2.50	PASS
DC 3.87V	50	4	0.002	±2.50	PASS

LTE Band 5, QPSK, 1.4MHz bandwidth(worst case of all bandwidths)

LTE FDD Band 5					
DC Power	Temperature (℃)	Frequency error(Hz)	Frequency error(ppm)	Limit (ppm)	Verdict
DC 4.3V	20	16	0.019	±2.50	PASS
DC 3.5V	20	67	0.081	±2.50	PASS
DC 3.87V	20	67	0.081	±2.50	PASS
DC 3.87V	-30	32	0.039	±2.50	PASS
DC 3.87V	-20	84	0.102	±2.50	PASS
DC 3.87V	-10	74	0.090	±2.50	PASS
DC 3.87V	0	96	0.116	±2.50	PASS
DC 3.87V	10	59	0.072	±2.50	PASS
DC 3.87V	20	88	0.107	±2.50	PASS
DC 3.87V	30	4	0.005	±2.50	PASS
DC 3.87V	40	75	0.091	±2.50	PASS
DC 3.87V	50	50	0.061	±2.50	PASS

LTE Band 5, 16QAM, 1.4MHz bandwidth(worst case of all bandwidths)

LTE FDD Band 5					
DC Power	Temperature (℃)	Frequency error(Hz)	Frequency error(ppm)	Limit (ppm)	Verdict
DC 4.3V	20	3	0.004	±2.50	PASS
DC 3.5V	20	66	0.080	±2.50	PASS
DC 3.87V	20	62	0.075	±2.50	PASS
DC 3.87V	-30	22	0.027	±2.50	PASS
DC 3.87V	-20	8	0.010	±2.50	PASS
DC 3.87V	-10	39	0.047	±2.50	PASS
DC 3.87V	0	6	0.007	±2.50	PASS
DC 3.87V	10	17	0.021	±2.50	PASS
DC 3.87V	20	61	0.074	±2.50	PASS
DC 3.87V	30	77	0.093	±2.50	PASS
DC 3.87V	40	40	0.049	±2.50	PASS
DC 3.87V	50	84	0.102	±2.50	PASS

LTE Band 7, QPSK, 5MHz bandwidth (worst case of all bandwidths and modulation type)

LTE FDD Band 7					
DC Power	Temperature (℃)	Frequency error(Hz)	Frequency error(ppm)	Limit (ppm)	Verdict
DC 4.3V	20	2	0.001	±2.50	PASS
DC 3.5V	20	-10	-0.004	±2.50	PASS
DC 3.87V	20	-15	-0.006	±2.50	PASS
DC 3.87V	-30	17	0.007	±2.50	PASS
DC 3.87V	-20	0	0.000	±2.50	PASS
DC 3.87V	-10	4	0.002	±2.50	PASS
DC 3.87V	0	7	0.003	±2.50	PASS
DC 3.87V	10	-19	-0.007	±2.50	PASS
DC 3.87V	20	-10	-0.004	±2.50	PASS
DC 3.87V	30	-16	-0.006	±2.50	PASS
DC 3.87V	40	8	0.003	±2.50	PASS
DC 3.87V	50	13	0.005	±2.50	PASS

LTE Band 7, 16QAM, 5MHz bandwidth (worst case of all bandwidths and modulation type)

LTE FDD Band 7					
DC Power	Temperature (℃)	Frequency error(Hz)	Frequency error(ppm)	Limit (ppm)	Verdict
DC 4.3V	20	-16	-0.006	±2.50	PASS
DC 3.5V	20	12	0.005	±2.50	PASS
DC 3.87V	20	-8	-0.003	±2.50	PASS
DC 3.87V	-30	11	0.004	±2.50	PASS
DC 3.87V	-20	1	0.000	±2.50	PASS
DC 3.87V	-10	-3	-0.001	±2.50	PASS
DC 3.87V	0	-18	-0.007	±2.50	PASS
DC 3.87V	10	-13	-0.005	±2.50	PASS
DC 3.87V	20	-11	-0.004	±2.50	PASS
DC 3.87V	30	16	0.006	±2.50	PASS
DC 3.87V	40	14	0.006	±2.50	PASS
DC 3.87V	50	13	0.005	±2.50	PASS

LTE Band 12, QPSK, 1.4MHz bandwidth (worst case of all bandwidths and modulation type)

LTE FDD Band 12					
DC Power	Temperature (℃)	Frequency error(Hz)	Frequency error(ppm)	Limit (ppm)	Verdict
DC 4.3V	20	60	0.085	±2.50	PASS
DC 3.5V	20	56	0.079	±2.50	PASS
DC 3.87V	20	19	0.027	±2.50	PASS
DC 3.87V	-30	58	0.082	±2.50	PASS
DC 3.87V	-20	65	0.092	±2.50	PASS
DC 3.87V	-10	32	0.045	±2.50	PASS
DC 3.87V	0	59	0.083	±2.50	PASS
DC 3.87V	10	76	0.107	±2.50	PASS
DC 3.87V	20	23	0.033	±2.50	PASS
DC 3.87V	30	17	0.024	±2.50	PASS
DC 3.87V	40	9	0.013	±2.50	PASS
DC 3.87V	50	32	0.045	±2.50	PASS

LTE Band 12, 16QAM, 1.4MHz bandwidth (worst case of all bandwidths and modulation type)

LTE FDD Band 12					
DC Power	Temperature (℃)	Frequency error(Hz)	Frequency error(ppm)	Limit (ppm)	Verdict
DC 4.3V	20	59	0.083	±2.50	PASS
DC 3.5V	20	71	0.100	±2.50	PASS
DC 3.87V	20	32	0.045	±2.50	PASS
DC 3.87V	-30	9	0.013	±2.50	PASS
DC 3.87V	-20	6	0.008	±2.50	PASS
DC 3.87V	-10	0	0.000	±2.50	PASS
DC 3.87V	0	78	0.110	±2.50	PASS
DC 3.87V	10	79	0.112	±2.50	PASS
DC 3.87V	20	9	0.013	±2.50	PASS
DC 3.87V	30	35	0.049	±2.50	PASS
DC 3.87V	40	71	0.100	±2.50	PASS
DC 3.87V	50	38	0.054	±2.50	PASS

LTE Band 14, 5MHz bandwidth, QPSK (worst case of all bandwidths)

LTE FDD Band 14					
DC Power	*Temperature (℃)*	*Frequency error(Hz)*	*Frequency error(ppm)*	*Limit (ppm)*	*Verdict*
DC 4.3V	20	88	0.113	2.50	PASS
DC 3.5V	20	6	0.008	2.50	PASS
DC 3.87V	20	80	0.102	2.50	PASS
DC 3.87V	-30	31	0.040	2.50	PASS
DC 3.87V	-20	58	0.074	2.50	PASS
DC 3.87V	-10	6	0.008	2.50	PASS
DC 3.87V	0	33	0.042	2.50	PASS
DC 3.87V	10	97	0.124	2.50	PASS
DC 3.87V	20	31	0.040	2.50	PASS
DC 3.87V	30	1	0.001	2.50	PASS
DC 3.87V	40	64	0.082	2.50	PASS
DC 3.87V	50	19	0.024	2.50	PASS

LTE Band 14, 5MHz bandwidth, 16QAM (worst case of all bandwidths)

LTE FDD Band 14					
DC Power	*Temperature (℃)*	*Frequency error(Hz)*	*Frequency error(ppm)*	*Limit (ppm)*	*Verdict*
DC 4.3V	20	81	0.104	2.50	PASS
DC 3.5V	20	55	0.070	2.50	PASS
DC 3.87V	20	26	0.033	2.50	PASS
DC 3.87V	-30	2	0.003	2.50	PASS
DC 3.87V	-20	89	0.114	2.50	PASS
DC 3.87V	-10	22	0.028	2.50	PASS
DC 3.87V	0	96	0.123	2.50	PASS
DC 3.87V	10	70	0.090	2.50	PASS
DC 3.87V	20	15	0.019	2.50	PASS
DC 3.87V	30	78	0.100	2.50	PASS
DC 3.87V	40	75	0.096	2.50	PASS
DC 3.87V	50	42	0.054	2.50	PASS

LTE Band 17, QPSK, 5MHz bandwidth(worst case of all bandwidths)

LTE FDD Band 17					
DC Power	Temperature (℃)	Frequency error(Hz)	Frequency error(ppm)	Limit (ppm)	Verdict
DC 4.3V	20	-20	-0.028	±2.50	PASS
DC 3.5V	20	-14	-0.020	±2.50	PASS
DC 3.87V	20	-20	-0.028	±2.50	PASS
DC 3.87V	-30	-23	-0.032	±2.50	PASS
DC 3.87V	-20	-43	-0.061	±2.50	PASS
DC 3.87V	-10	-10	-0.014	±2.50	PASS
DC 3.87V	0	-27	-0.038	±2.50	PASS
DC 3.87V	10	-50	-0.070	±2.50	PASS
DC 3.87V	20	-44	-0.062	±2.50	PASS
DC 3.87V	30	-28	-0.039	±2.50	PASS
DC 3.87V	40	18	0.025	±2.50	PASS
DC 3.87V	50	5	0.007	±2.50	PASS

LTE Band 17, 16QAM, 5MHz bandwidth(worst case of all bandwidths)

LTE FDD Band 17					
DC Power	Temperature (℃)	Frequency error(Hz)	Frequency error(ppm)	Limit (ppm)	Verdict
DC 4.3V	20	31	0.044	±2.50	PASS
DC 3.5V	20	16	0.023	±2.50	PASS
DC 3.87V	20	4	0.006	±2.50	PASS
DC 3.87V	-30	-32	-0.045	±2.50	PASS
DC 3.87V	-20	19	0.027	±2.50	PASS
DC 3.87V	-10	17	0.024	±2.50	PASS
DC 3.87V	0	38	0.054	±2.50	PASS
DC 3.87V	10	12	0.017	±2.50	PASS
DC 3.87V	20	29	0.041	±2.50	PASS
DC 3.87V	30	22	0.031	±2.50	PASS
DC 3.87V	40	39	0.055	±2.50	PASS
DC 3.87V	50	-49	-0.069	±2.50	PASS

LTE Band 25, QPSK, 1.4MHz bandwidth (worst case of all bandwidths and modulation type)

LTE FDD Band 25					
DC Power	Temperature (℃)	Frequency error(Hz)	Frequency error(ppm)	Limit (ppm)	Verdict
DC 4.3V	20	82	0.044	±2.50	PASS
DC 3.5V	20	91	0.048	±2.50	PASS
DC 3.87V	20	28	0.015	±2.50	PASS
DC 3.87V	-30	66	0.035	±2.50	PASS
DC 3.87V	-20	35	0.019	±2.50	PASS
DC 3.87V	-10	55	0.029	±2.50	PASS
DC 3.87V	0	34	0.018	±2.50	PASS
DC 3.87V	10	72	0.038	±2.50	PASS
DC 3.87V	20	14	0.007	±2.50	PASS
DC 3.87V	30	41	0.022	±2.50	PASS
DC 3.87V	40	26	0.014	±2.50	PASS
DC 3.87V	50	32	0.017	±2.50	PASS

LTE Band 25, 16QAM, 1.4MHz bandwidth (worst case of all bandwidths and modulation type)

LTE FDD Band 25					
DC Power	Temperature (℃)	Frequency error(Hz)	Frequency error(ppm)	Limit (ppm)	Verdict
DC 4.3V	20	89	0.047	±2.50	PASS
DC 3.5V	20	53	0.028	±2.50	PASS
DC 3.87V	20	4	0.002	±2.50	PASS
DC 3.87V	-30	37	0.020	±2.50	PASS
DC 3.87V	-20	56	0.030	±2.50	PASS
DC 3.87V	-10	99	0.053	±2.50	PASS
DC 3.87V	0	55	0.029	±2.50	PASS
DC 3.87V	10	13	0.007	±2.50	PASS
DC 3.87V	20	8	0.004	±2.50	PASS
DC 3.87V	30	82	0.044	±2.50	PASS
DC 3.87V	40	92	0.049	±2.50	PASS
DC 3.87V	50	2	0.001	±2.50	PASS

LTE Band 26<814 – 824 MHz>, QPSK, 1.4MHz bandwidth (worst case of all bandwidths and modulation type)

LTE FDD Band 26					
DC Power	Temperature (℃)	Frequency error(Hz)	Frequency error(ppm)	Limit (ppm)	Verdict
DC 4.3V	20	14	0.017	±2.50	PASS
DC 3.5V	20	37	0.045	±2.50	PASS
DC 3.87V	20	67	0.082	±2.50	PASS
DC 3.87V	-30	46	0.056	±2.50	PASS
DC 3.87V	-20	73	0.089	±2.50	PASS
DC 3.87V	-10	30	0.037	±2.50	PASS
DC 3.87V	0	15	0.018	±2.50	PASS
DC 3.87V	10	9	0.011	±2.50	PASS
DC 3.87V	20	89	0.109	±2.50	PASS
DC 3.87V	30	29	0.035	±2.50	PASS
DC 3.87V	40	8	0.010	±2.50	PASS
DC 3.87V	50	57	0.070	±2.50	PASS

LTE Band 26<814 – 824 MHz>, 16QAM, 1.4MHz bandwidth (worst case of all bandwidths and modulation type)

LTE FDD Band 26					
DC Power	Temperature (℃)	Frequency error(Hz)	Frequency error(ppm)	Limit (ppm)	Verdict
DC 4.3V	20	13	0.016	±2.50	PASS
DC 3.5V	20	82	0.100	±2.50	PASS
DC 3.87V	20	96	0.117	±2.50	PASS
DC 3.87V	-30	74	0.090	±2.50	PASS
DC 3.87V	-20	6	0.007	±2.50	PASS
DC 3.87V	-10	59	0.072	±2.50	PASS
DC 3.87V	0	89	0.109	±2.50	PASS
DC 3.87V	10	78	0.095	±2.50	PASS
DC 3.87V	20	20	0.024	±2.50	PASS
DC 3.87V	30	68	0.083	±2.50	PASS
DC 3.87V	40	87	0.106	±2.50	PASS
DC 3.87V	50	7	0.009	±2.50	PASS

LTE Band 26<824 – 849 MHz >, QPSK, 1.4MHz bandwidth (worst case of all bandwidths and modulation type)

LTE FDD Band 26					
DC Power	Temperature (℃)	Frequency error(Hz)	Frequency error(ppm)	Limit (ppm)	Verdict
DC 4.3V	20	68	0.081	±2.50	PASS
DC 3.5V	20	98	0.117	±2.50	PASS
DC 3.87V	20	21	0.025	±2.50	PASS
DC 3.87V	-30	20	0.024	±2.50	PASS
DC 3.87V	-20	90	0.108	±2.50	PASS
DC 3.87V	-10	93	0.111	±2.50	PASS
DC 3.87V	0	99	0.118	±2.50	PASS
DC 3.87V	10	41	0.049	±2.50	PASS
DC 3.87V	20	88	0.105	±2.50	PASS
DC 3.87V	30	75	0.090	±2.50	PASS
DC 3.87V	40	81	0.097	±2.50	PASS
DC 3.87V	50	74	0.088	±2.50	PASS

LTE Band 26<824 – 849 MHz >, 16QAM, 1.4MHz bandwidth (worst case of all bandwidths and modulation type)

LTE FDD Band 26					
DC Power	Temperature (℃)	Frequency error(Hz)	Frequency error(ppm)	Limit (ppm)	Verdict
DC 4.3V	20	62	0.074	±2.50	PASS
DC 3.5V	20	60	0.072	±2.50	PASS
DC 3.87V	20	79	0.094	±2.50	PASS
DC 3.87V	-30	92	0.110	±2.50	PASS
DC 3.87V	-20	19	0.023	±2.50	PASS
DC 3.87V	-10	55	0.066	±2.50	PASS
DC 3.87V	0	4	0.005	±2.50	PASS
DC 3.87V	10	16	0.019	±2.50	PASS
DC 3.87V	20	17	0.020	±2.50	PASS
DC 3.87V	30	37	0.044	±2.50	PASS
DC 3.87V	40	21	0.025	±2.50	PASS
DC 3.87V	50	70	0.084	±2.50	PASS

LTE Band 41, 5MHz bandwidth, QPSK (worst case of all bandwidths)

LTE TDD Band 41					
DC Power	Temperature (℃)	Frequency error(Hz)	Frequency error(ppm)	Limit (ppm)	Verdict
DC 4.3V	20	78	0.037	±2.50	PASS
DC 3.5V	20	64	0.031	±2.50	PASS
DC 3.87V	20	0	0.000	±2.50	PASS
DC 3.87V	-30	46	0.022	±2.50	PASS
DC 3.87V	-20	98	0.047	±2.50	PASS
DC 3.87V	-10	27	0.013	±2.50	PASS
DC 3.87V	0	70	0.033	±2.50	PASS
DC 3.87V	10	10	0.005	±2.50	PASS
DC 3.87V	20	73	0.035	±2.50	PASS
DC 3.87V	30	8	0.004	±2.50	PASS
DC 3.87V	40	87	0.042	±2.50	PASS
DC 3.87V	50	65	0.031	±2.50	PASS

LTE Band 41, 5MHz bandwidth, 16QAM (worst case of all bandwidths)

LTE TDD Band 41					
DC Power	Temperature (℃)	Frequency error(Hz)	Frequency error(ppm)	Limit (ppm)	Verdict
DC 4.3V	20	20	0.010	±2.50	PASS
DC 3.5V	20	70	0.033	±2.50	PASS
DC 3.87V	20	77	0.037	±2.50	PASS
DC 3.87V	-30	58	0.028	±2.50	PASS
DC 3.87V	-20	26	0.012	±2.50	PASS
DC 3.87V	-10	51	0.024	±2.50	PASS
DC 3.87V	0	45	0.022	±2.50	PASS
DC 3.87V	10	91	0.043	±2.50	PASS
DC 3.87V	20	80	0.038	±2.50	PASS
DC 3.87V	30	20	0.010	±2.50	PASS
DC 3.87V	40	32	0.015	±2.50	PASS
DC 3.87V	50	67	0.032	±2.50	PASS

LTE Band 66, 1.4MHz bandwidth, QPSK (worst case of all bandwidths)

LTE FDD Band 66					
DC Power	Temperature (℃)	Frequency error(Hz)	Frequency error(ppm)	Limit (ppm)	Verdict
DC 4.3V	20	23	0.013	2.50	PASS
DC 3.5V	20	19	0.011	2.50	PASS
DC 3.87V	20	65	0.037	2.50	PASS
DC 3.87V	-30	36	0.021	2.50	PASS
DC 3.87V	-20	28	0.016	2.50	PASS
DC 3.87V	-10	65	0.037	2.50	PASS
DC 3.87V	0	41	0.023	2.50	PASS
DC 3.87V	10	64	0.037	2.50	PASS
DC 3.87V	20	41	0.023	2.50	PASS
DC 3.87V	30	15	0.009	2.50	PASS
DC 3.87V	40	94	0.054	2.50	PASS
DC 3.87V	50	16	0.009	2.50	PASS

LTE Band 66, 1.4MHz bandwidth, 16QAM (worst case of all bandwidths)

LTE FDD Band 66					
DC Power	Temperature (℃)	Frequency error(Hz)	Frequency error(ppm)	Limit (ppm)	Verdict
DC 4.3V	20	1	0.001	2.50	PASS
DC 3.5V	20	88	0.050	2.50	PASS
DC 3.87V	20	50	0.029	2.50	PASS
DC 3.87V	-30	47	0.027	2.50	PASS
DC 3.87V	-20	15	0.009	2.50	PASS
DC 3.87V	-10	63	0.036	2.50	PASS
DC 3.87V	0	98	0.056	2.50	PASS
DC 3.87V	10	90	0.052	2.50	PASS
DC 3.87V	20	65	0.037	2.50	PASS
DC 3.87V	30	84	0.048	2.50	PASS
DC 3.87V	40	13	0.007	2.50	PASS
DC 3.87V	50	85	0.049	2.50	PASS

NOTE:We measured all modes and only recorded the worst case.

5 TEST SETUP PHOTOS OF THE EUT

Reference to the Test Report: **CTA24050902607.**

6 EXTERNAL AND INTERNAL PHOTOS OF THE EUT

Reference to the Test Report: **CTA24050902601.**

.....End of Report.....