# User guide
# **Mortise Touch.**

igloohome

Version 0.1 05/23

# Hi there!

We're so glad you've decided to join us on this journey to create a world without keys. You're officially an igloohomie!

In this guide, you'll find everything you need to get started with your lock. We hope that we've been as comprehensive and informative as possible. Afterall, we're here to make life easier for you (at least when it comes to your home's access).

If you do not find what you're looking for, we're working on updating it. Or... you could reach out to us at support@igloohome.co because we love interacting with you! Speaking of interaction, let's stay connected regardless. Why don't you join the community of igloohomies worldwide?

**Follow us on Facebook**

**Watch us on YouTube**

**Or stalk us on Instagram**

**Maybe network with us on LinkedIn**

**We're always updating our guides because we want to keep things fresh! You can visit igloohome.co/support periodically to view the latest version, unless, this is the latest version. Hello you, igloohomie from the future, wow!**

# Table of Contents


What's Included 4

Specifications 5

Installation Guide
Requirements 6
Preparing the Door 8
Installation Instructions 10

User Guide
Lock Anatomy 13
Features 14
Unlocking from the Outside 16
Unlocking from the Inside 18
Locking from the Outside 20
Locking from the Inside 21
Child & Pet Safety Handle Function 22
App Onboarding 24
Managing Access in App 25
9V Jumpstart 27
Changing Batteries 28
Lock Behaviour 29
Airbnb Connect 31
Audio and LED Indications 32
Intergrations 33

Troubleshoot 34

# What's Included

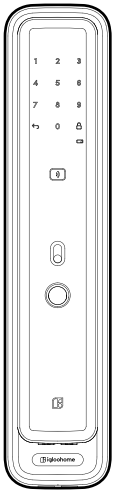


**Front Assembly**

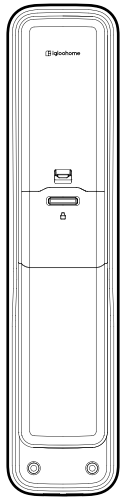


**Back Assembly**

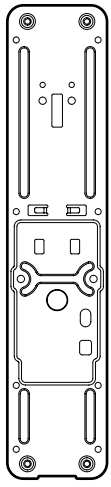

**Back Plate**

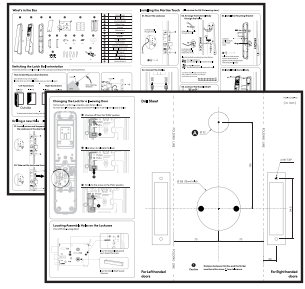

**Drill Sheet & Installation Guide**

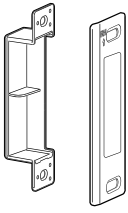

**Strike Plates**

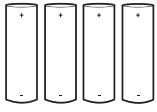

**AA Batteries** x4

**RFID Tags** x2

**RFID Stickers** x2

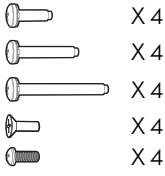


**Screws**

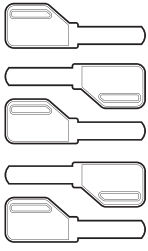

**5 Physical Keys**

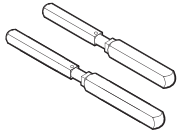

**Mortise Shafts**

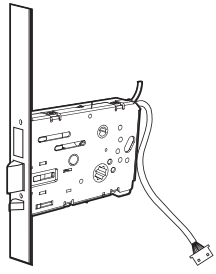

**Mortise Assembly**

***Note:*** *1. For door frames with thickness of 40mm and above, it is recommended to use the strike plate with an extended curved lip;*
*2. For doors with thickness of 40mm – 50mm, please use the shorter shaft; for doors with thickness of 50mm – 70mm, please user the longer shaft.*

# Specifications

| | |
|---|---|
| **Model** | MT1 |
| **Gross (with packaging)** | 5.2kg / 11.46lbs |
| **Net** | 4.6kg / 10.14lbs |
| **Body** | Zinc Alloy, ABS, Acrylic |
| **Modes of Access (Entry)** | PIN codes, Digital Keys, RFID tags and stickers, Mechanical keys, Fingerprint unlock |
| **Modes of Access (Exit)** | Handle, Multi-function button |
| **Provided RFID Tags & Stickers** | 1 pair of tags \| 1 pair of stickers |
| **RFID Tags & Stickers Capacity** | 100 |
| **Physical key** | 5 |
| **Power Type** | 4 AA alkaline batteries |
| **Battery Life** | Up to 10 months |
| **Emergency Power** | 9V Alkaline Battery |
| **Battery Operating Temp.** | -10°C to 50°C / 14°F to 122°F |
| **Operation Temp.** | -25°C to 55°C / -77°F to 131°F |
| **Certifications** | IP54, CE, FCC |
| **Protocols** | *Bluetooth*® 5.0, algoPIN™ technology, RFID Card & Tags, Physical Keys |
| **Usage** | Advised to be installed under sheltered areas, not to be exposed to wet weather conditions. |

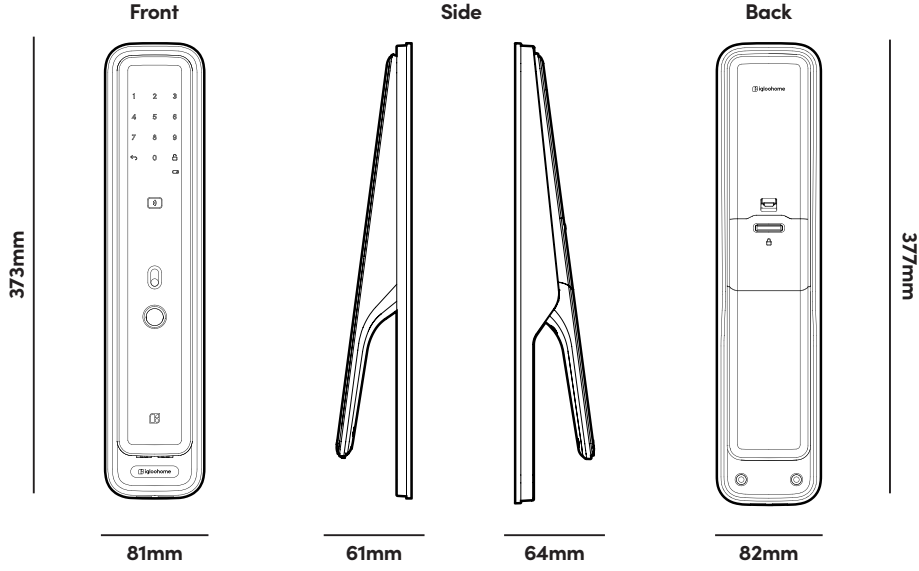


* **DO NOT USE:** Heavy Duty, Eveready, GP, or rechargeable batteries. Duracell, Energizer and Panasonic alkaline batteries recommended. Please note that using better batteries will improve the performance and lifespan of the lock.

# Installation Guide

## Requirements

### Door Thickness

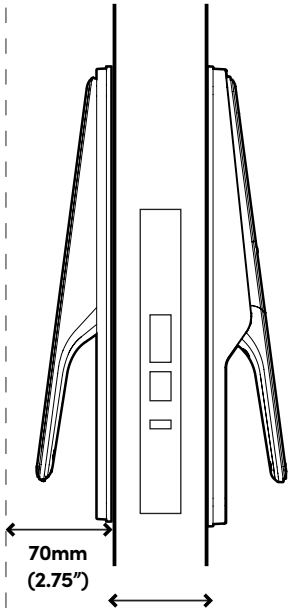


### Clearance

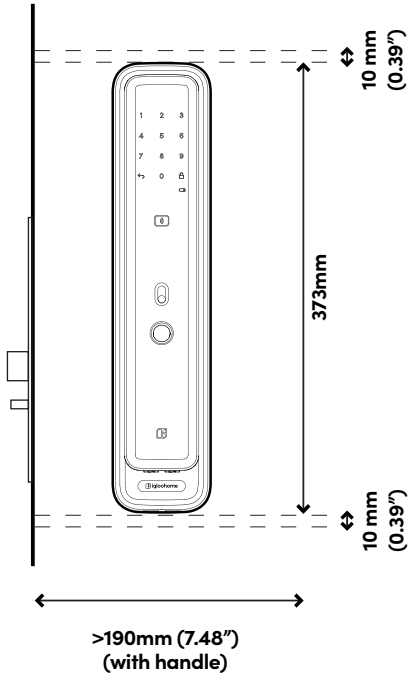


### Mortise Assembly Length

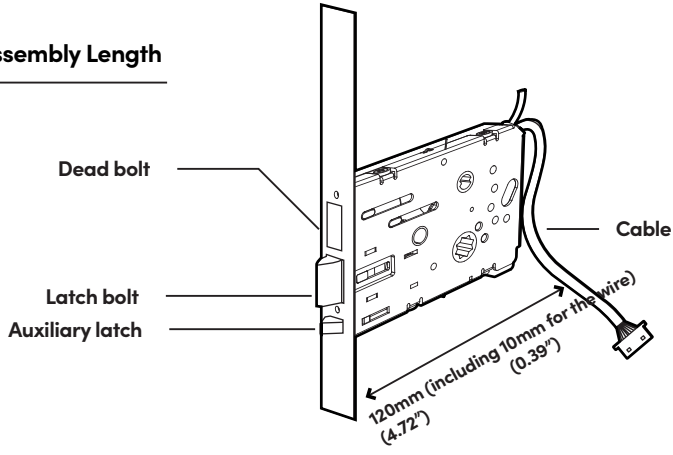

## Screw Specifications

| | | | |
|---|---|---|---|
| • **20mm (0.78”)** | **A** | **X 4** | For doors with thickness 40 - 55mm (1.57” - 2.16”) |
| • **35mm (1.37”)** | **B** | **X 4** | For doors with thickness 50 - 60mm (1.96” - 2.36”) |
| • **50mm (1.96”)** | **C** | **X 4** | For doors with thickness 65 - 75mm (2.55” - 2.95”) |
| • **8mm (0.31”)** | **D** | **X 4** | |
| • **12.7mm (0.50”)** | **E** | **X 4** | |

## Door Type

### Left Hand Installation

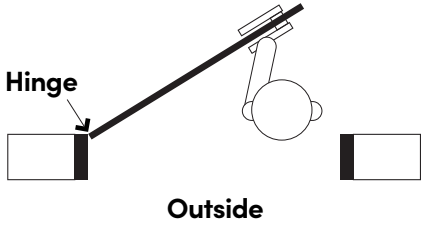


*Note: Hinge is on your left.*

### Right Hand Installation

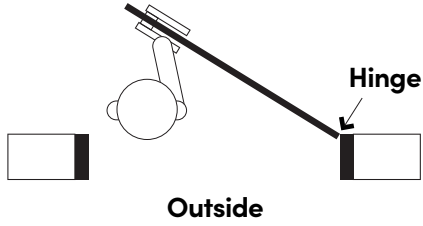


*Note: Hinge is on your right.*

# Preparing the Door

**Items needed:**

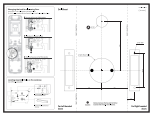

**Drill Sheet**

**Drill**

**32mm (1.25″) Hole Saw**

**68mm (2.70″) Hole Saw**

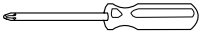

**#2 Phillips Screw Driver**

**20mm (0.78″) Spade Bit**

**20mm (0.78″) Chisel**

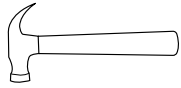

**Hammer**

***Recommended***
Door and door frame material : **Wood**

***Recommended***
Gap between door and door frame: **<3mm (0.01″)**

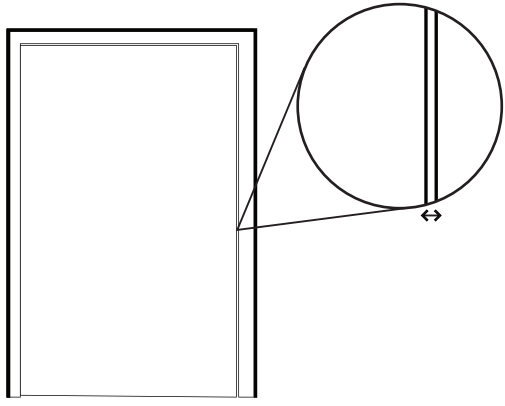

⚠ *Note: Not for metal gates, glass doors or sliding doors.*
If you are unsure if your door is suitable, send us web links to your door pictures to support@igloohome.co

# How to use the Drill Sheet

## Drilling (Door)

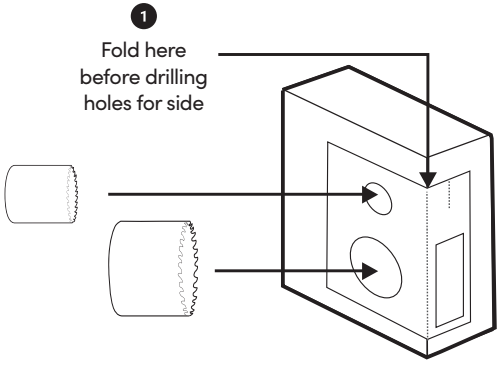


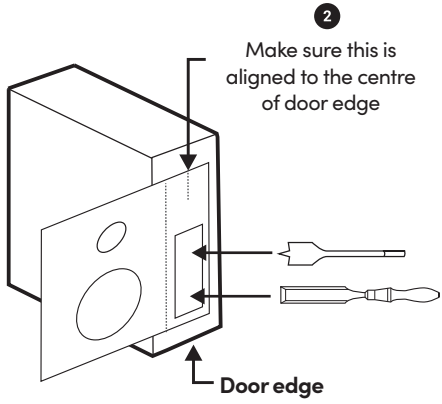


## Chiselling

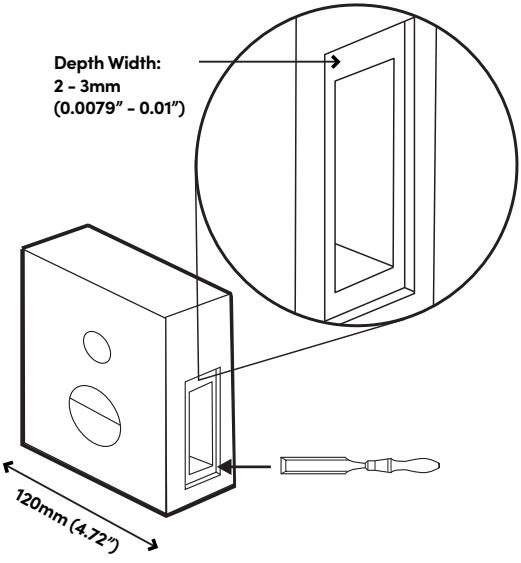


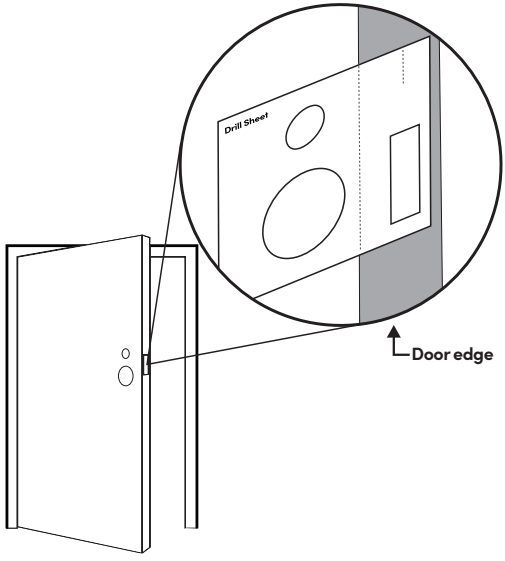


⚠ Mark the center of the holes and then drill for accuracy.

# Installation Instructions

**1** Mortise touch is set for Out-swing doors upon factory release. To switch for a In-swing door, adjust and reorient the lever inside the Internal Body as below.

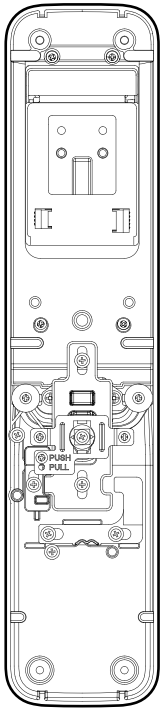


**A** Unscrew off from the 'PUSH' position.

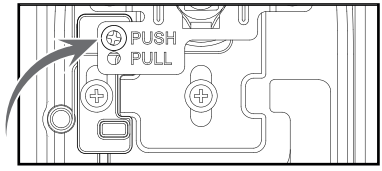


**B** Slide down to relocate the lever.

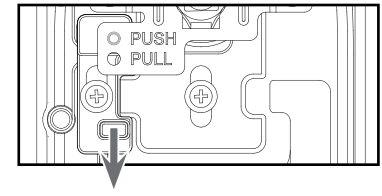


**C** Firmly fix the screw on the 'PULL' position.

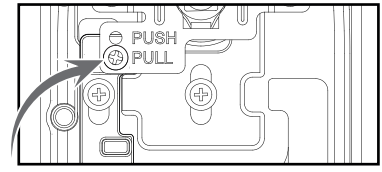


**2** Align the Key Shaft according to your door direction.

**For Left-hand doors :**
Turn the Shaft left until it reaches this angle

**For Right-hand doors :**
Turn the Shaft right until it reaches this angle

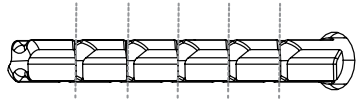

Cut off the excess length of the Key Shaft with a nipper or a pincher according to the thickness of your door.

* *The notch to snap serves as guideline only and might change depending on actual door conditions.*

## 3 Install Mortise

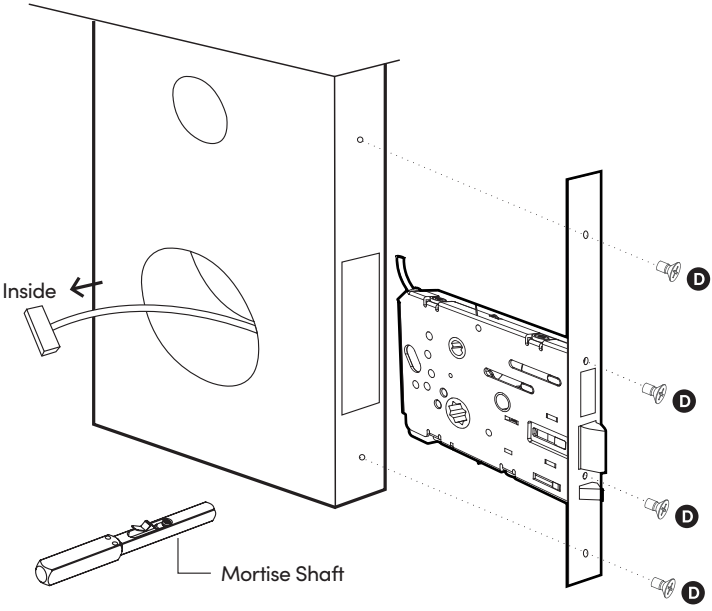


**Screws**

D 8mm (0.31")

## 4 Install Outer Body

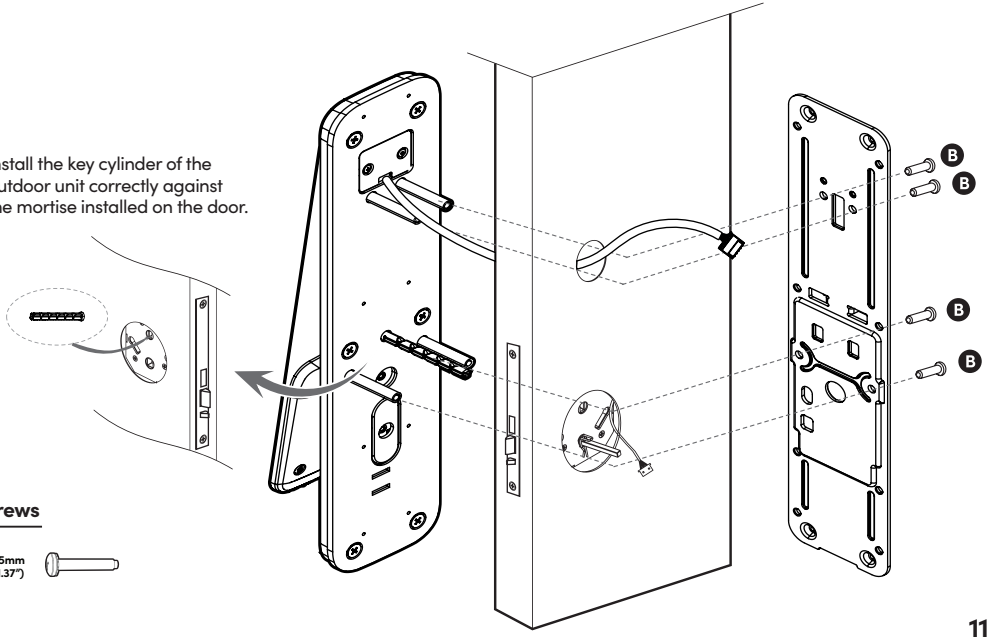


Install the key cylinder of the outdoor unit correctly against the mortise installed on the door.

**Screws**

B 35mm (1.37")

## 5 Connecting Cable

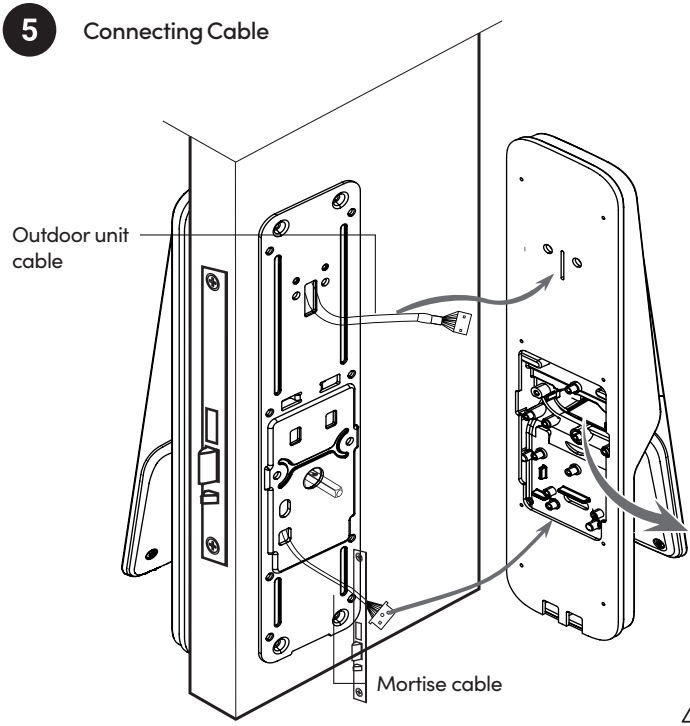


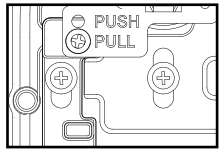


⚠ *The toggle switch must be the opposite from the outdoor body.*

## 6 Install Inner Body

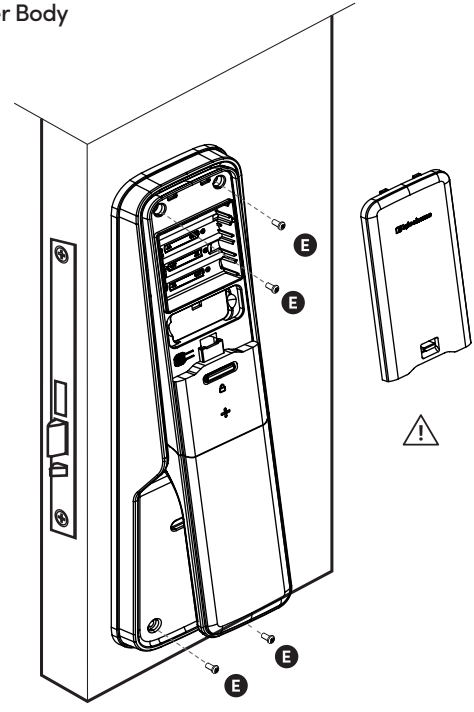


⚠ *Be aware not to damage the cables during installation.*

**Screws**

E 12.7mm (0.50")

## 7 Install Striker on the door frame.

Ensure to chisel appropriately to the correct measurements.

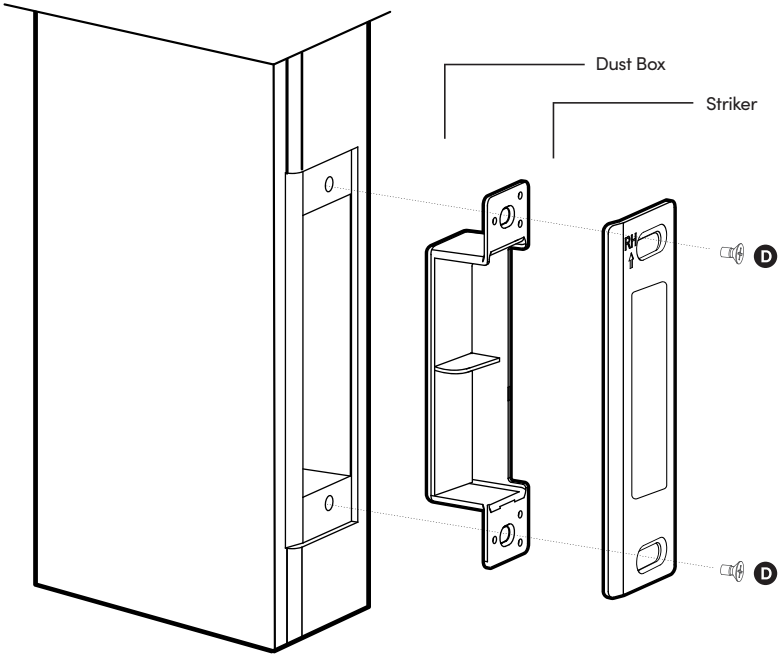


### Screws

D 15mm (0.23")

### Installation Confirmation

1. Insert batteries then the buzzer will sound
2. Lock the door by pressing and holding 🔒
3. Unlock the door with ↩**1234567890** 🔒

# User Guide

## Lock Anatomy

**Outer Body**

**Inner Body**

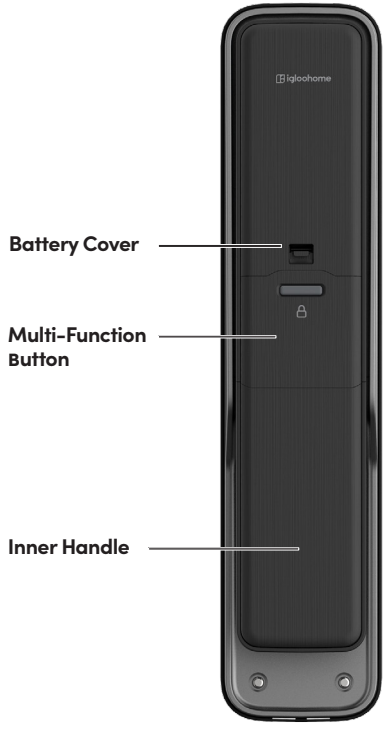


⚠ *Note: Please remove the bottom cover to access keyhole*

# Features

## PIN

**Decoy PIN Code**

Heighten security and throw off onlookers by entering random digits before your actual PIN code.

**Privacy Mode**

Disable all modes of access except the Master Digital key to prevent unwanted entries into your property.

## Battery

**Emergency Jumpstart**

Easily jumpstart the lock with a 9V battery if batteries are drained.

**Low Battery Alert**

Intuitive audio and visual alerts will prompt you to change the batteries when it runs low.

## Security / Alarms

**Tamper Alarm**

The lock will sound an alarm if it is being pried from the door to alert and deter potential tampering attempts.

**Obstruction Alarm**

The lock will sound an alarm if the bolt tongue cannot be extended or retracted fully to alert the user of any obstructions.

**Security Lockout**

Keypad is disabled after several incorrect access attempts to ensure your property is always secure.

**Intrusion Alarm**

The lock will sound off when the door is forced open while the bolt is still extended.

## Others

**Volume Control**

Adjust the volume according to your preference. Select from levels 0 (mute) to 5 (loudest).

**Mechanical Keys**

Keys are available in case of unforeseen circumstances.

# Modes of access

| | |
|---|---|
| **Modes of access (Entry)** | PIN codes, Digital Keys, RFID tags & stickers, Fingerprint |
| **Modes of access (Exit)** | Digital Keys, Key Fob |

## a PIN Code

As the owner of the lock, you can use the Master PIN code, issue Guest PIN codes, and test the lock during set-up with the Factory PIN code.

| | |
|---|---|
| **Master PIN Code** | Permanent PIN code that works every time.<br>Can be customized via Bluetooth by lock owner. |
| **Guest PIN Code** | Generated via algoPIN™ technology or customized via Bluetooth by lock owner. Includes One-Time, duration, permanent and recurring PIN codes. |

1. Wake the lock up by pressing the touchscreen keypad.
2. Enter a valid PIN code, with or without decoy digits, followed by 🔒
3. The LED indicator on the lock will flash green when it is successfully unlocked. You will also hear four ascending tones.

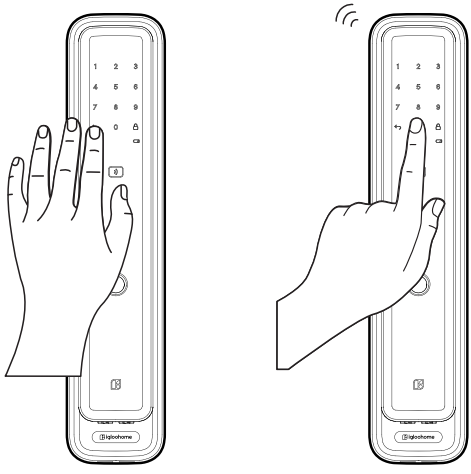

## b Bluetooth

This mode requires you to have the igloohome app installed on your mobile phone with a verified account. You can be the owner of the lock, or be a recipient of a Guest Digital Key to use this as a valid mode of access.

1. On the app, select the lock you're trying to access.
2. Tap the 🔒 on the screen.
3. The LED indicator on the lock will flash blue to establish the Bluetooth connection, then green when it is successfully unlocked. You will also hear four ascending tones.

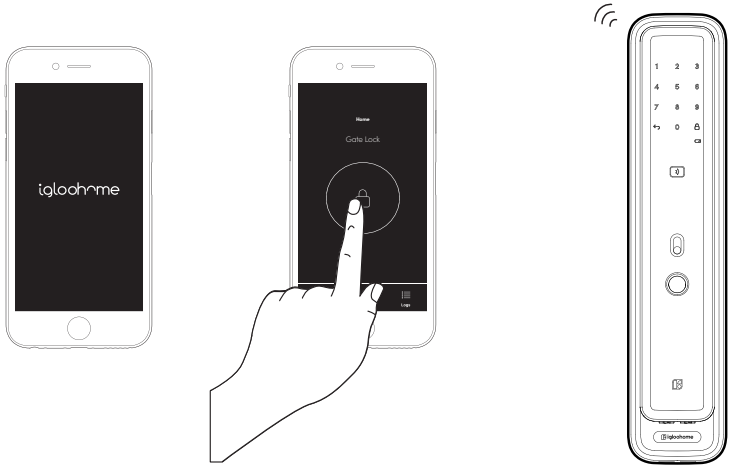


**Note:** You need to be within Bluetooth range of the lock, and have your Bluetooth services switched on.

## c RFID tags & stickers

The lock accepts RFID credentials. You can register up to 100 tags and stickers. Only the provided RFID tags and stickers are recommended. To purchase more, please go to **www.igloohome.co/store**

1. Tap your RFID tag or sticker on the RFID reader.
2. The LED indicator on the lock will flash green when it is successfully unlocked. You will also hear four ascending tones.

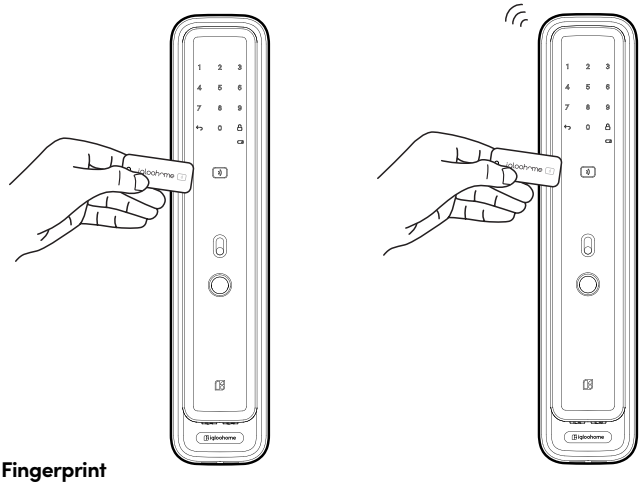


## d Fingerprint

This mode is available on the Mortise Touch (MT1). You can register up to 100 fingerprints.

1. Place the registered finger on the fingerprint module.
2. The LED indicator on the lock will flash green when it is successfully unlocked. You will also hear four ascending tones.

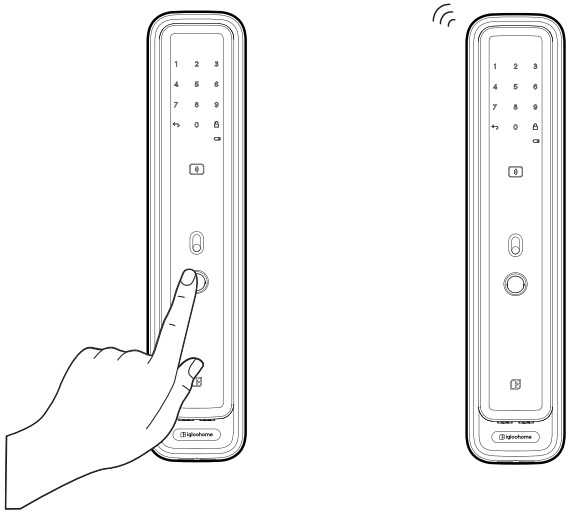

## e Key Fob

1. Press the button on the Key Fob.
2. The LED indicator on the lock will flash blue to establish the Bluetooth connection, then green when it is successfully unlocked. You will also hear four ascending tones.

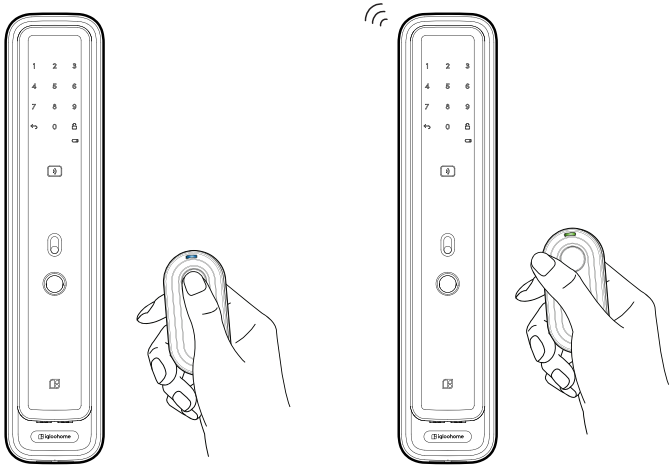


**Note:** The Key Fob needs to be used within Bluetooth range of the lock.

## f Mechanical handle

This can only be accessed from the back assembly. In case of unforeseen circumstances, you will never be locked in.

Push/ pull the mechanical handle to exit.

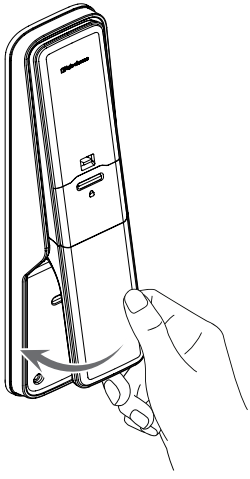

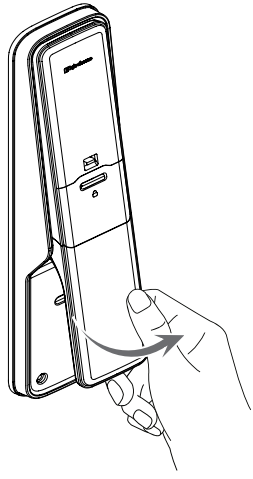

# Child & Pet Safety Function

**a** **Activate**

1. The function is deactivated by default.
2. To activate it, push the safety toggle to the right.
3. The Mortise now cannot be unlocked from the inside using the handle.

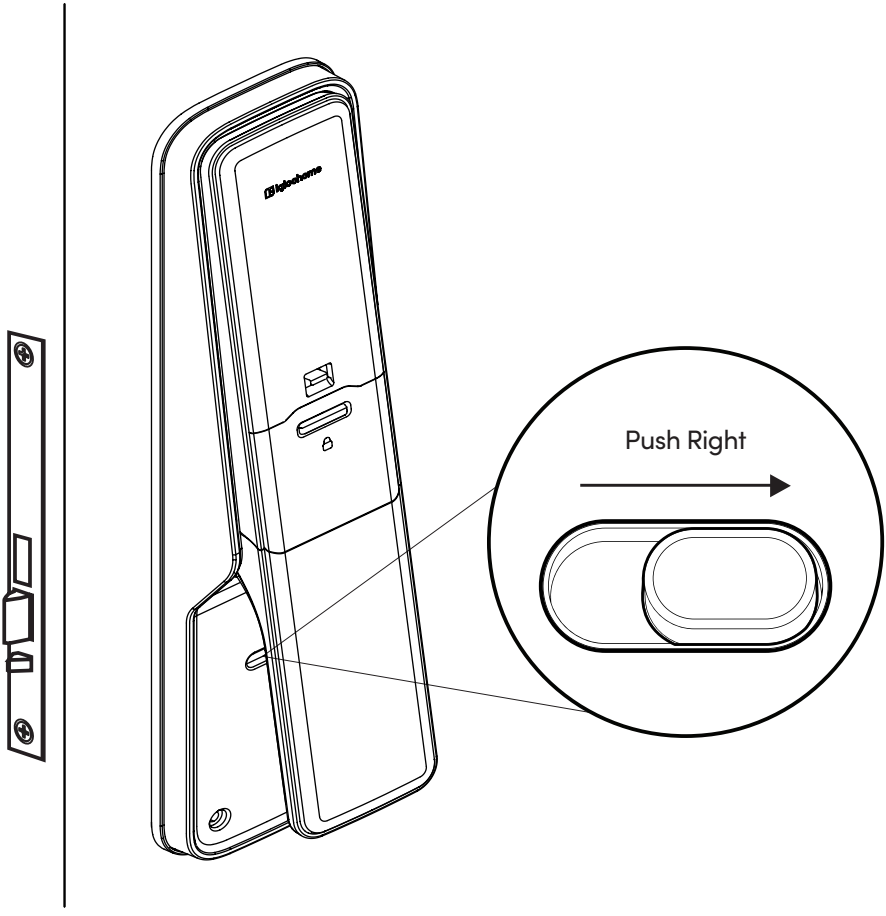

## b Deactivate

1. To deactivate the function, simply push the safety toggle towards the left.
2. The Mortise can now be unlocked from the inside using the handle.

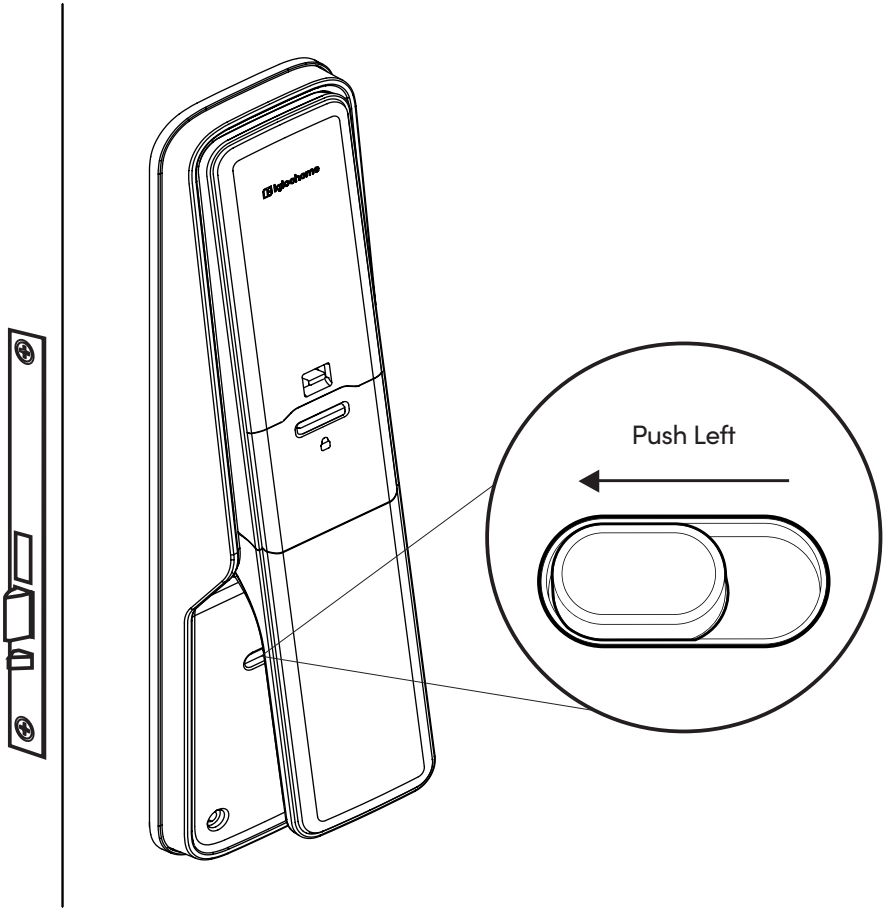

# App Onboarding

## 1 Download the igloohome app

The mobile app is available for free on the App Store and Google Play Store!

**App Store** **Google Play**

## 2 Register for an igloohome account

1) Launch the igloohome app and tap **[Create new account]**
2) Fill in the fields shown on the screen.
3) Accept the terms of services and privacy policy.
4) Tap **[Create account]**.
5) Enter the 6-digit OTP sent to your email address.
6) Tap **[Verify]**.
7) You now have a verified igloohome account!

**If you have forgotten your password,**

1) Visit the login page and select **[Forgot password?]**
2) Enter your registered email address.
3) Press **[Submit]**.

You will receive an email with a link and instructions on how to reset your password.

## 3 Pair the lock to your account

**If you're completely new to igloohome:**
Test the lock with the Factory PIN code before you begin the pairing process.

1. Wake the lock up by pressing the touchscreen keypad.
2. Tap ↩, then enter 1234567890, followed by 🔓.
3. The LED indicator on the lock will flash green when it is successfully unlocked. You will also hear four ascending tones.

a) Create a property to associate your lock with.

1. Tap on ≡ and select **[Add and manage].**
2. Tap on **[Manage Properties].**
3. Tap the **[+]** icon.
4. Input the name and region of the property, and tap **[Submit]**.

b) Pair the lock to your account.

1. Tap on ≡ and select **[Add and manage].**
2. Tap on the **[<]** icon.
3. Tap on **[Add Lock].**
4. Select the property you created.
5. Follow the instructions on the screen.

**If you're pairing the lock to an existing igloohome account:**

1. Tap on ≡ and select **[Add and manage].**
2. Tap on **[Add Lock].**
3. Select the property.
4. Follow the instructions on the screen.

## 4 Change your Master PIN code

The Master PIN code is automatically set after your lock is successfully paired to your igloohome account.

This PIN code is unique to your lock. It will always work as long as the lock is paired to your account.

You can customise this to something that is easier for you.

Before you do this, ensure you are within Bluetooth range of the lock and your Bluetooth function is turned on.

1. On the igloohome mobile app, tap on the ◁ icon.
2. Tap on **[Master PIN Code].**
3. Tap on ✎ and enter a new 7 - 9 digit PIN code.
4. Enter the new PIN code again.
5. Tap **[Confirm].**

# Managing Access via the app

## 1 Fingerprint Registration

Up to 10 authorized fingerprints can be added to the Padlock Lite

1. On the igloohome mobile app, tap on the icon.
2. Tap on **[+Access].**
3. Select the access type from the list on the screen.
4. Fill in the required fields.
5. Select **[algoPIN™].**
6. Tap on **[Create PIN code].**

**b) If you want to create a customised PIN code, you will need to be within Bluetooth range of the lock with your Bluetooth function turned on:**

1. On the igloohome mobile app, tap on the icon.
2. Tap on **[+Access].**
3. Select the access type from the list on the screen.
4. Fill in the required fields.
5. Select **[Bluetooth].**
6. Tap on **[Create PIN code].**

**Important:**

All PIN codes generated by algoPIN™ technology have activation periods.
If they are not used within the period, the PIN codes will be considered invalid.

One-Time & Permanent PIN Codes - 24hrs of being generated
I.e. Generated at 1900hrs today, must be used by 1900hrs tomorrow to activate.

Duration & Recurring PIN Codes - 24hrs from the start date and time of its validity period
I.e. Created for 1900hrs on 1 Jan, must be used from 1900hrs - 2000hrs on 1 Jan to activate.

---

## 2 Create Guest Digital Keys

Allow guests and family members to use their smartphones to unlock the door. When you issue a Digital Key, you get real-time updates on who has accessed your property.

1. On the igloohome mobile app, tap on the .
2. Tap on **[+Access].**
3. Select **[Digital Key].**
4. Fill in the required fields.
5. Tap on **[Create Divgital Key].**
6. Tap on **[Share].**

Your guest can either scan the unique QR code shown on your screen, or you may share the link via your preferred communication method (Text, Email, WhatsApp, Facebook Messenger etc.) to claim the Digital Key.

Your guest will either need to download the igloohome mobile app and register for an account or claim the Digital Key with their existing igloohome account.

**Important:**

All Digital Keys must be claimed **within 1 hour** of it being generated. If they are unclaimed within the period, the keys will be considered invalid.
I.e. Generated at 1900hrs today, must be claimed by guest by 2000hrs today.

Digital Keys can be revoked by lock owner anytime.

---

## 3 Register RFID Credentials

You will need to be near your lock to register new RFID tags and/or stickers.

1. On the igloohome mobile app, tap on the icon.
2. Tap on **[+Access].**
3. Select **[RFID tags/stickers].**
4. The lock will sound off an alert (long beep).
5. After this, tap the RFID tag or sticker against the icon on the lock.
6. Fill in the required fields.
7. Tap **[Done]** to complete the registration of the new RFID tag or sticker.

---

## 4 Register Fingerprints

You will need to be near your lock to register new fingerprint profiles.

1. On the igloohome mobile app, tap on the icon.
2. Tap on **[+Access].**
3. Select **[Fingerprints].**
4. After reading the instructions, tap **[Next].**
5. Fill in the required fields.
6. Follow the instructions shown on your screen to register a new fingerprint.
   **Finger must be placed on the module at least thrice during the process.*
7. Upon successful registration, lock will sound off an alert (4 ascending tones).
8. Tap **[Done]** to complete the registration of a new fingerprint.

---

# 9V Jumpstart

## 1 9V Jumpstart Feature

1. Touch and hold the battery contacts against the 9V jumpstart pin on the lock and you will hear a series of beeps and the keypad will light up if the batteries are fully drained.

2. While holding the 9V battery to the jumpstart, key in your PIN code on the keypad followed by the 'Unlock' icon

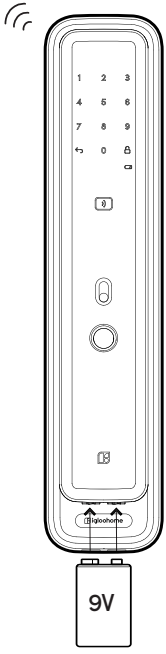


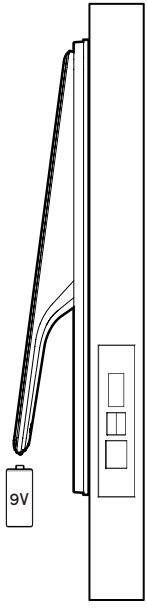


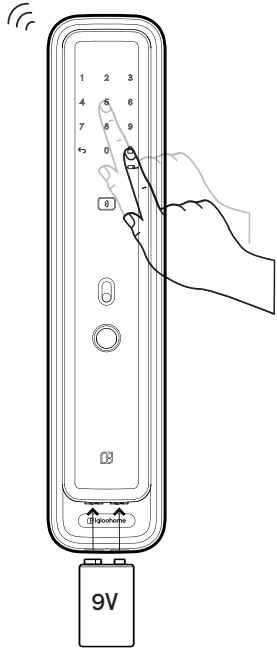


⚠ Please ensure terminals of the 9V battery are in proper contact with the contact points on the lock.

# Changing Batteries

**1** **Push the battery cover upwards to remove it.**

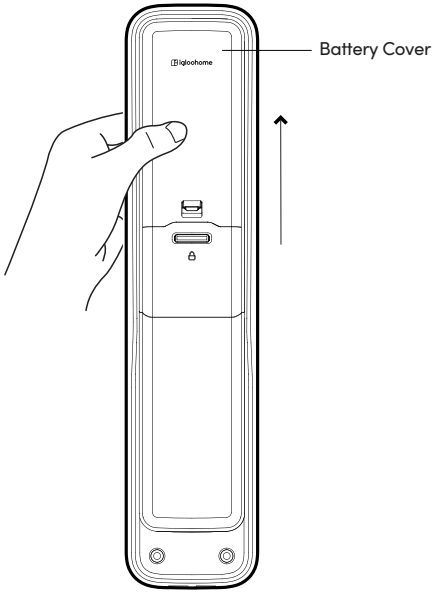


**2** **Insert AA Batteries**

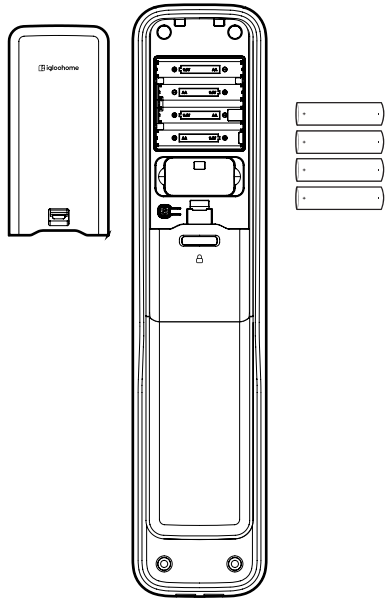


**3** **Secure battery cover tightly by pushing it downwards.**

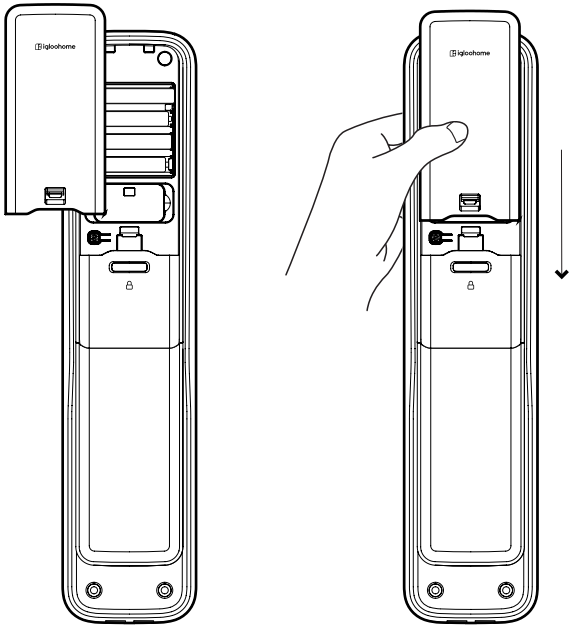

# Manage Lock Features

<table>
<tr><td>Auto Lock</td><td>You can configure the duration before Auto Lock is triggered:<br>*Please ensure you are within Bluetooth range of the lock and your Bluetooth function is turned on.<br><br>1. On your igloohome app, tap on ⚙.<br>2. Select [Auto Lock Timer]<br>3. Select from the list of preset durations, or customise the number of seconds, or choose to never automatically lock.<br>4. Tap [Apply].<br><br>If you choose to never automatically lock, you may wish to perform a manual relock: Hold the 🔓 on the keypad for 3 seconds. The LED indicator will flash green and you'll hear a long beep for successful relocking.</td></tr>
<tr><td>Security Lockout</td><td>You can configure the number of attempts before the Security Lockout mode is enabled:<br>*Please ensure you are within Bluetooth range of the lock and your Bluetooth function is turned on.<br><br>1. On your igloohome app, tap on ⚙.<br>2. Select [Security Lockout].<br>3. Select the number of attempts from 1 to 10, or choose to deactivate this function completely.<br>4. Tap [Apply].<br><br>Once this is set, the lockout will be triggered after you exceed the number of attempts set.<br><br>Your lock will reject any further unlocking attempts via the same mode you used. You can disable it by trying another valid access mode.<br><br>
<table>
<tr><th>Triggered</th><th>Security Alarm</th><th>Security Lockout</th></tr>
<tr><td>1st Time</td><td>30 Sec</td><td>1 Min</td></tr>
<tr><td>2nd Time</td><td>60 Sec</td><td>5 Min</td></tr>
<tr><td>3rd and Consecutive Time</td><td>90 Sec</td><td>10 Min</td></tr>
</table></td></tr>
<tr><td>Low Battery Alert</td><td>N.A.</td></tr>
</table>

| | |
|---|---|
| **Tamper Alarm** | N.A. |
| **Intrusion Alarm** | N.A. |
| **Obstruction Alarm** | N.A. |
| **Emergency Jumpstart** | 1. Hold the 9V battery against the jumpstart contact points.<br>2. The lock will sound off a series of beeps and the keypad will light up.<br>3. Maintaining the same position with the battery and lock's contact points, enter a valid PIN code, followed by 🔓 to unlock. |
| **Decoy PIN Code** | 1. Key in up to 8 random digits before your actual PIN code, followed by 🔓 to unlock. |
| **Privacy Mode** | 1. Hold the multi-function button on your lock for 3 seconds while it is in 'locked' state i.e. bolt tongue is extended. |
| **Quiet Unlock** | To mute audio indicators when unlocking:<br>1. Tap 🔓 before entering your PIN code / scanning your RIFD credential / using your fingerprint.<br><br>You will have to perform the same step every time you wish to activate Quiet Unlock.<br><br>You will not be able to mute audio indicators if this is performed when the lock is in 'unlocked' state i.e. bolt tongue is retracted. |
| **Volume Control** | To configure the volume of your lock:<br>***Please ensure you are within Bluetooth range of the lock and your Bluetooth function is turned on.**<br><br>1. On your igloohome app, tap on ⚙.<br>2. Select **[Volume].**<br>3. Select the volume level from 0 to 5 (softest to loudest).<br>4. Tap **[Apply].** |

# Manage Lock Settings

| | |
|---|---|
| **Delete Lock** | To delete a lock from your account, you will need to unpair the device:<br>***Please ensure you are within Bluetooth range of the lock and your Bluetooth function is turned on.**<br><br>1. On your igloohome app, tap on ⚙.<br>2. Select **[Delete Lock].**<br>3. Follow the instructions shown on the pop-up and tap **[Ok].** |
| **Delete All PIN Codes** | To delete all PIN codes created for a specific lock:<br>***Please ensure you are within Bluetooth range of the lock and your Bluetooth function is turned on.**<br><br>1. On your igloohome app, tap on ⚙.<br>2. Select **[Delete All PIN Codes].**<br>3. Follow the instructions shown on the pop-up and tap **[Ok].** |
| **Hard Reset / Unpair** | To perform a hard reset:<br><br>1. Ensure the lock is in 'unlocked' state i.e. bolt tongue is retracted.<br>2. Delete the lock from your app.<br>3. Press and the **[R]** button together for 3 seconds.<br>4. You will hear 3 slow descending tones upon successful reset. |
| **Lock Name** | To change the name of your lock:<br><br>1. On your igloohome app, tap on ⚙.<br>2. Select **[Lock Name].**<br>3. Enter the new name of your lock.<br>4. Tap **[Submit].** |
| **Finding your lock's Bluetooth ID** | Every lock has a unique Bluetooth ID.<br>Should you need the ID for support purposes, find it by:<br><br>1. On your igloohome app, tap on ⚙.<br>2. Located on the top of the screen |
| **Sync** | We recommend syncing your lock to your account every 3 months for optimal product experience.<br><br>Syncing the lock to your account helps you stay up-to-date with the lock's battery levels and activity logs.<br><br>**Note:**<br>This may take up to 5 minutes depending on how often you sync the lock with your account.<br><br>To do this:<br>1. On your igloohome app, tap on ⚙.<br>2. Tap the **[Sync]** button located underneath the battery status. |

# Audio and LED Indications

| Actions | Indications |
|---|---|
| Bluetooth Connection | Status indicator flashes Blue |
| Successfully Unlocked | Ascending 4 fast tones after unlocked and flash Green LED 2 times |
| Successfully Locked | 1 long beep after product is locked and Green LED for 2 seconds |
| Incorrect PIN | 4 short beeps and flash Red LED 2 times |
| Invalid RFID | Descending 4 fast tones |
| Invalid Fingerprint | Single invalid attempt - 2 short beeps<br>3 invalid attempts - Descending 4 fast tones |
| Obstruction Alarm | 6 sets of 4 short beeps |
| Keypad Disabled Mode Activated | Ascending 3 fast tones |
| Keypad Disabled Mode Deactivated | Descending 3 fast tones |
| Keypad Security Lockout Alarm | Low-high siren for 30 /60 / 90 seconds |
| Keypad Security Lockout Deactivated | 2 long beeps |
| Low Battery Alert | When mortise is locked or unlocked:<br>If battery is below 20% -<br>2 sets of 2 short beeps with pulsing Red LED<br>If battery is below 10% -<br>4 sets of 2 short beeps with pulsing Red LED |
| Fire Alarm | Ascending 4 continuous tones |
| Tamper Alarm | Continuous long beep |
| Hard Reset / Unpair | Descending 3 slow tones |
| Pairing | Ascending 3 fast tones |

# Troubleshoot

## Pairing is unsuccessful

- Try with a different mobile device, using the same username and password
- Update your phone's operating system to the latest version
- Restart the Bluetooth and Internet connection on your mobile device
- Restart igloohome app on your mobile device
- Switch  to a new set of batteries

## Digital Key is not working

- Restart the Bluetooth and Internet connection on your mobile device
- Check on the timezone of the home listing against your phone time
- Check if the Digital Keys is expired. It must be accepted within 1 hour of generation
- Update your igloohome app to the latest version
- Switch to a new set of batteries

## Generated PIN codes do not work

- Make sure that the generated PIN codes are activated within the given hours
- Do a Bluetooth Unlock to refresh the app
- PIN codes may have been customised or expired

## Keypad does not light up

- The Mortise battery is flat
- Use a 9V battery to jumpstart the lock and unlock the Mortise to replace the batteries
- Refer to page 26 and 27
- Please unlock within 20 seconds

## Unable to use a 9V battery to jumpstart the lock

- Please ensure the two pins of the battery is in contact with the 9V jumpstart pin securely while unlocking it
- Please unlock within 20 seconds
- Please ensure that the 9V battery has sufficient power

## Keypad is flickering

- The Mortise is low in battery. Switch to a new set of batteries

## Keypad lights up on touch only

- Check if the mortise is in keypad lockout / passage mode or security lockout mode
- Check that your lock is not muted

## Re-lock is not working

- Check battery level of the lock
- Make sure you have enabled auto relock function on the app and the magnet sensor has been installed on the door frame

## Slow locking / Unlocking

- The Mortise is low in battery. Switch to a new set of batteries

## Pressing the handle from the inside does not unlock the door

- Make sure you do not activate the safety handle function. If so, please refer to page 23 to deactivate it.

# FCC Compliance

This device complies with part 15 of the FCC Rules. Operation is subject to the following two conditions: (1) this device may not cause harmful interference, and (2) this device must accept any interference received, including interference that may cause undesired operation.

**NOTE:** This equipment has been tested and found to comply with the limits for a Class B digital device, pursuant to Part 15 of the FCC Rules. These limits are designed to provide reasonable protection against harmful interference in a residential installation. This equipment generates, uses and can radiate radio frequency energy and, if not installed and used in accordance with the instructions, may cause harmful interference to radio communications. However, there is no guarantee that interference will not occur in a particular installation.

If this equipment does cause harmful interference to radio or television reception, which can be determined by turning the equipment off and on, the user is encouraged to try to correct the interference by one or more of the following measures:

- Reorient or relocate the receiving antenna.
- Increase the separation between the equipment and receiver.
- Connect the equipment into an outlet on a circuit different from that to which the receiver is connected.
- Consult the dealer or an experienced radio/TV technician for help.

**NOTE:** The Grantee is not responsible for any changes or modifications not expressly approved by the party responsible for compliance. such modifications could void the user's authority to operate the equipment.

The device has been evaluated to meet general RF exposure requirement.
This equipment complies with FCC's RF radiation exposure limits set forth for an uncontrolled environment. This device and its antenna(s) must not be co-located or conjunction with any other antenna or transmitter.

| Certification Number |
| --- |
| FCC ID: 2AYD7-MT1 |

# EU Declaration of Conformity

**(EN)** igloocompany Pte. Ltd hereby declares that it is in compliance with the essential requirements and other relevant provisions of Directive 2014/53/EU and Directive 2011/65/EU as amended by Directive 2015/863/EU. The EU Declaration of Conformity can be found in the link below.

**https://go.iglooworks.co/MT1support**

CE

| Frequency | Maximum Power |
|---|---|
| 2.4 Ghz (Bluetooth) | < 20 dBm |

---

The *Bluetooth*® word mark and logos are registered trademarks owned by Bluetooth SIG, Inc . and any use of such marks by igloohome Pte. Ltd. is under license . Other trademarks and trade names are those of their respective owners.

**For enquiries go to:**
igloohome.co/MT1support