Installers & User guide **Retrofit Lock.**

igloohome

Version 0.1 09/21 OE1

Welcome!

This guide will get you up and running with your Retrofit Lock.
In the meantime, you should follow us on Facebook and Youtube!

Like us on Facebook

Visit our Youtube

**As our igloohome app is frequently updated, there may be changes to this manual.
Please refer to our website igloohome.co/support for the latest version of the manual.**

Table of Contents

What's Included 4

Specifications 5

Lock Anatomy 6

Installation Guide
- Requirements 7
- Preparing for Installations 10
- Installation Instructions
  - Key Installation 11
  - Removable thumbturn Installation 13
  - Non-Removable thumbturn Installation 15
  - Door Sensor Position 19
- Calibrating your Lock 12
- Testing Lock Functionalities 13

User Guide
- Features 15
- Unlocking 17
- Locking 21
- App Onboarding 23
- Managing Access in App 24
- Changing Batteries 27
- Lock Behaviour 28
- Connect with Airbnb 30
- Audio and LED Indications 31

Troubleshoot 32

Compliance 33

What’s Included

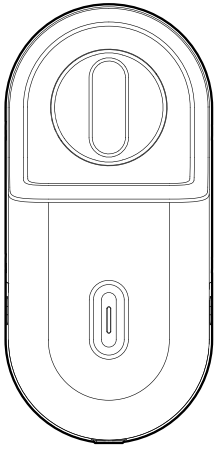

Retrofit Lock

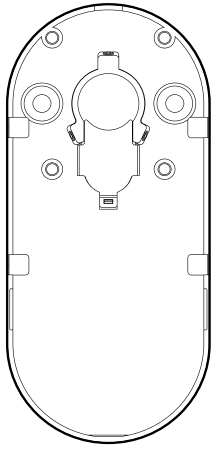

Mounting Plate

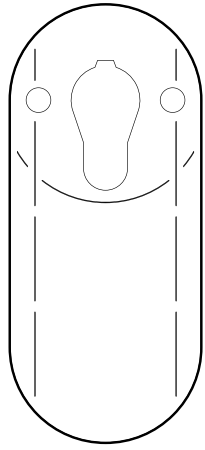

Double Sided Tape

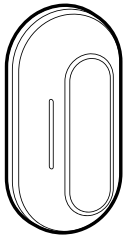

Door Sensor

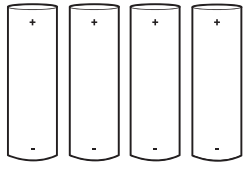

AA Alkaline Batteries x4

Allen Key

5mm (0.20”) Bolt Screw x4

Specifications

Model	Retrofit Lock
Battery Type	4 x AA* Alkaline Batteries
Battery Life	Up to 12 Months
Operation Temp	-20°C to 50°C
Storage Temp	-30°C to 60°C
IP Rating	IP44
Material	AL, ABS+PC, SUS
Weight	Net: 0.3kg, Gross: 0.5kg
Unlock Mechanism	Bluetooth, Physical Keys, Thumbturn, Multi-Function Button
Unlock Speed	Single throw lock: 2 seconds unlock/lock Double throw lock: 4 seconds unlock/lock

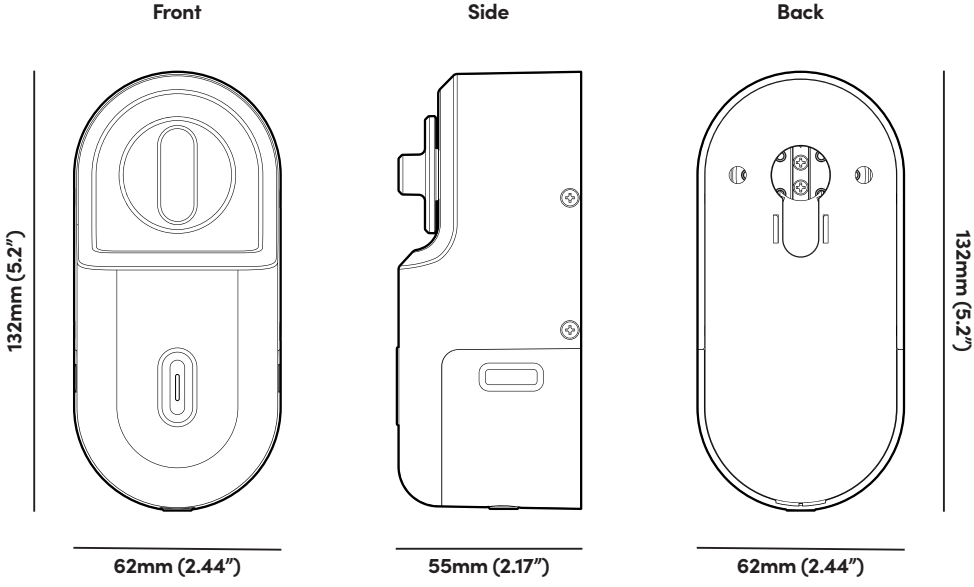

* **DO NOT USE:** Heavy Duty, Eveready, GP, or rechargeable batteries. Duracell, Energizer and Panasonic alkaline batteries recommended. Please note that using better batteries will improve the performance and lifespan of the lock.

User Guide

Lock Anatomy

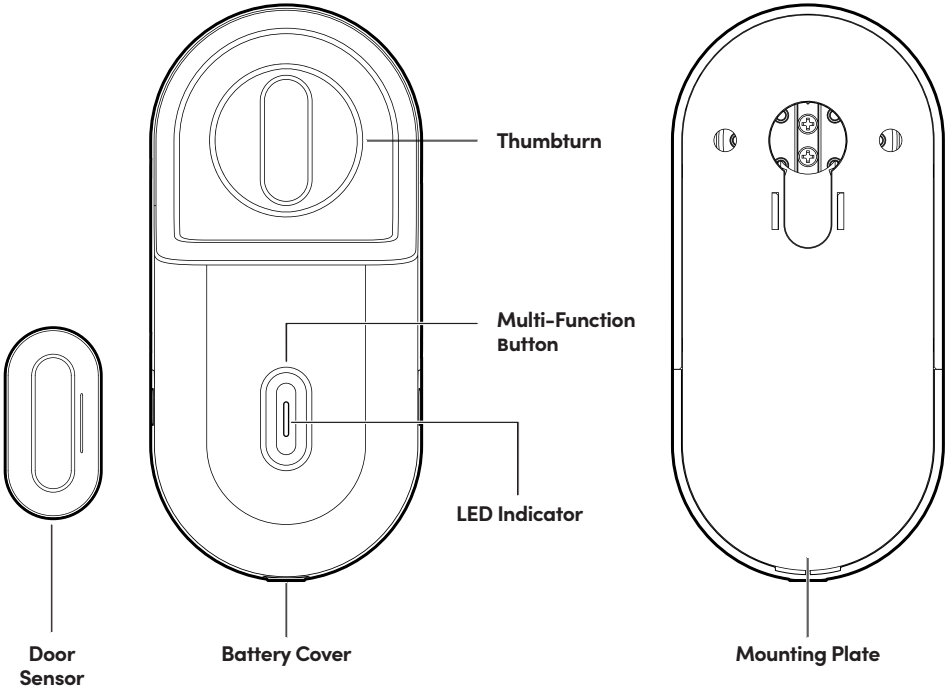

Bottom View

Installation Guide

Requirements for Door/Key/Cylinder/Cassette

Doors

Door opens inwards when you leave the house.

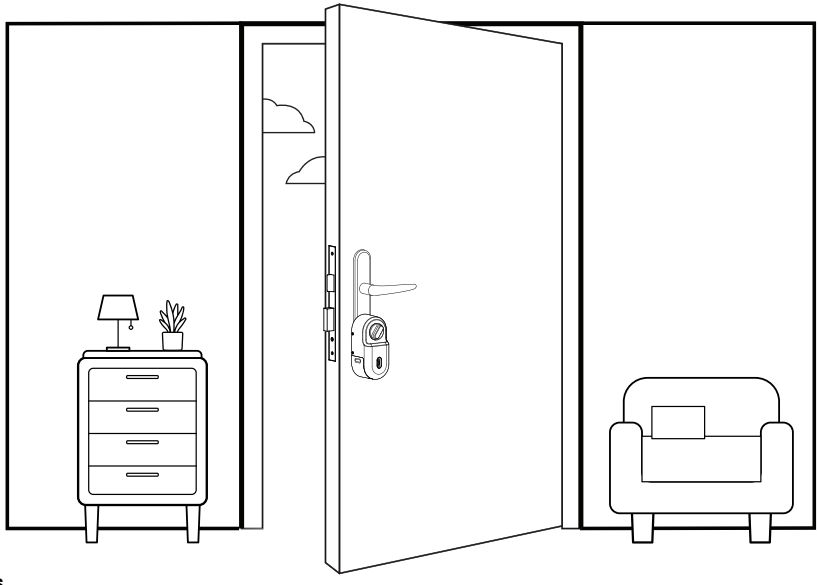

Keys

1. Thickness of key: <5mm
2. Key head Width: <39mm
3. Key head Depth: <33mm

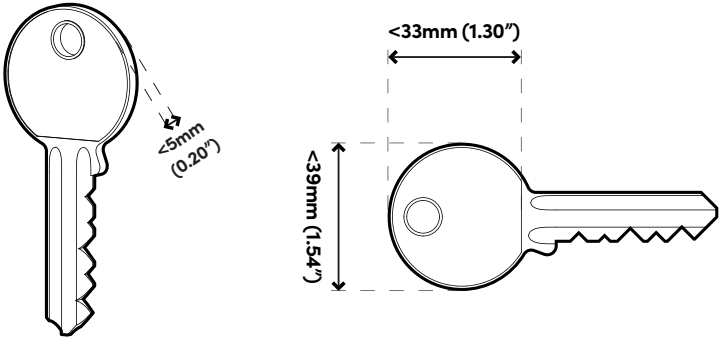

Thumbturns

1. Thumbturn Thickness: Up to 20 - 36mm
2. Thumbturn Width: Up to 30mm
3. Thumbturn Depth: Up to 24mm

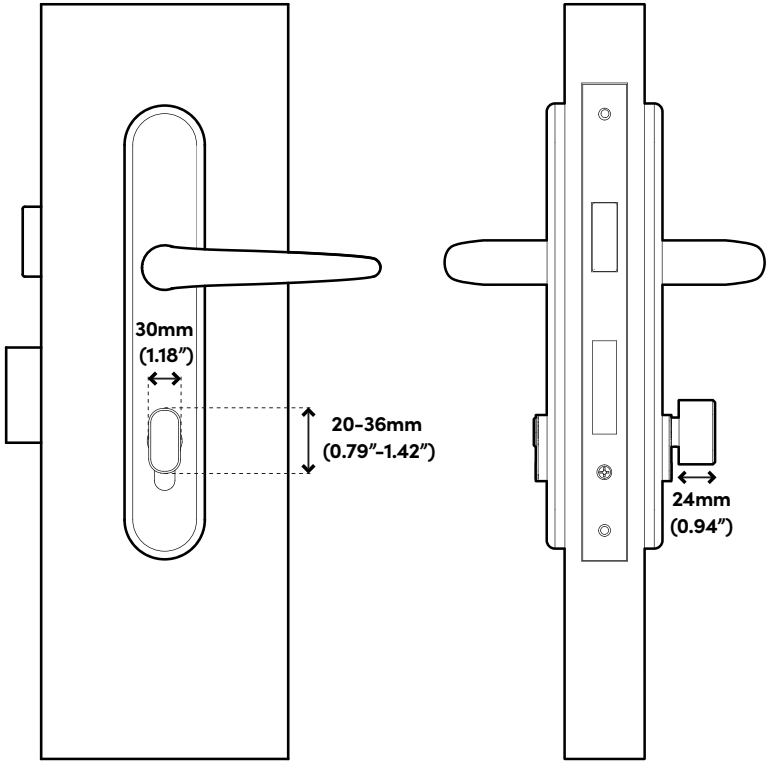

Cylinder

1. The Retrofit Lock will only work with euro profiled cylinder
2. Cylinder should protrude 4mm for stable use, else user will have to use the 3M adhesive tape provided to secure the lock

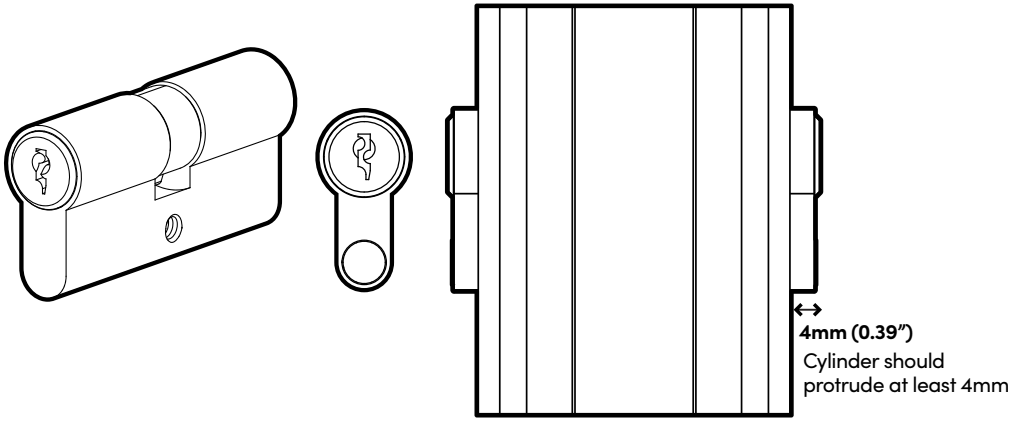

Cassette

Cassette with backset greater than 35mm

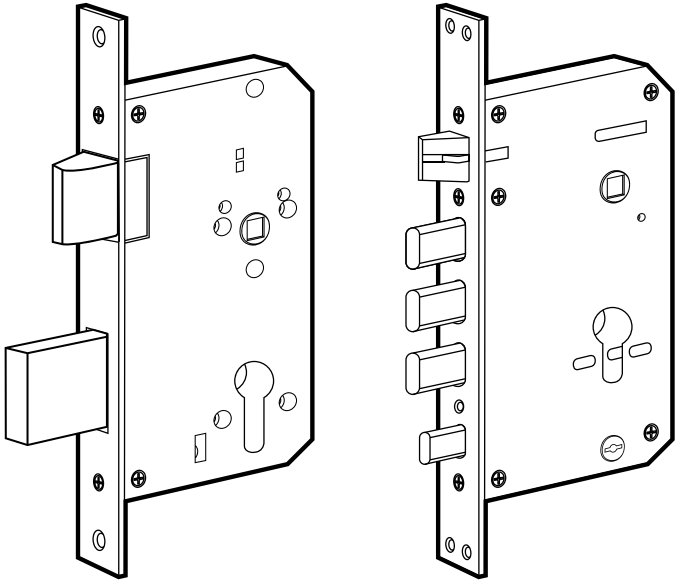

Preparing for Installation

Items needed:

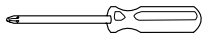

#2 Phillips Screwdriver
Not provided in the box

Allen key

Indoor Use

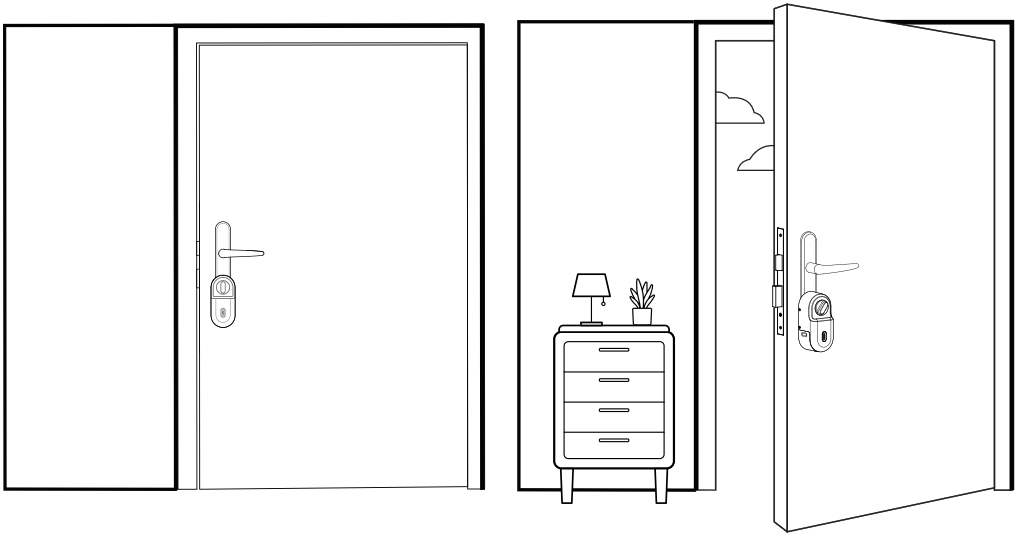

⚠ *Note: The Retrofit Lock is not designed for outdoor use.*

Installation Instructions

Key Installation

1a **Remove keys from cylinder.**

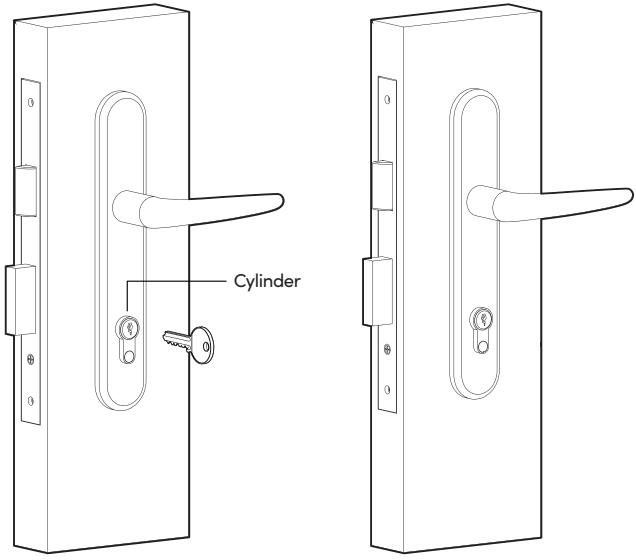

1b **Place mounting plate onto lock cylinder and secure it with the Allen key provided.**

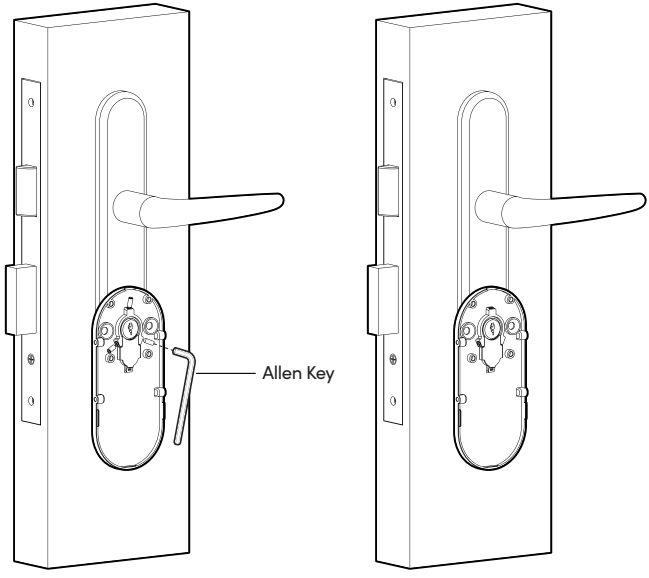

1c **Re-insert key into the lock cylinder. After which, please refer to 4a and 4b to complete the installation.**

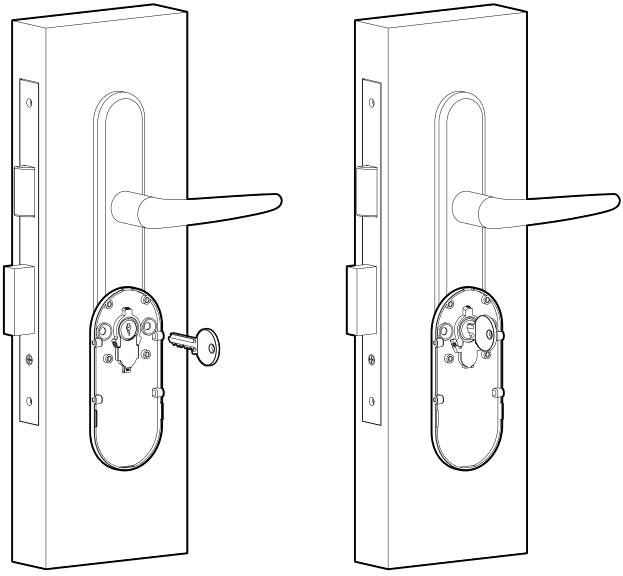

Installation Instructions

Removable Thumbturn Installation

2a **Unscrew the set screw from the thumbturn.**

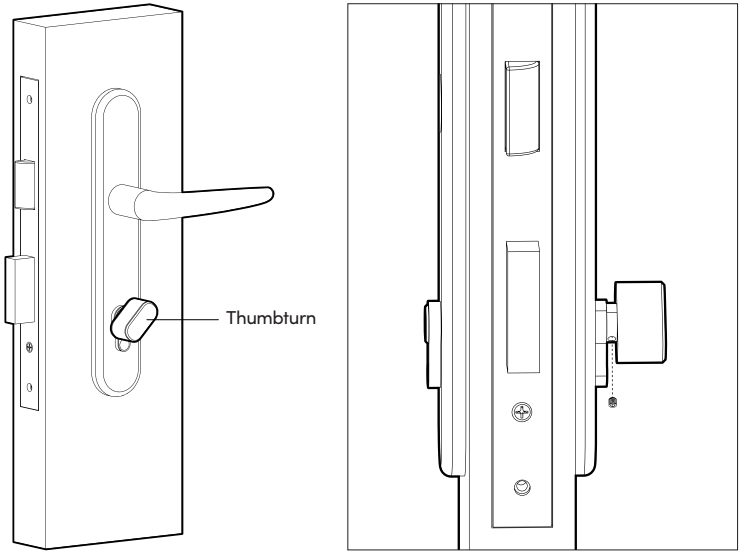

2b **Remove the thumbturn from the lock cylinder.**

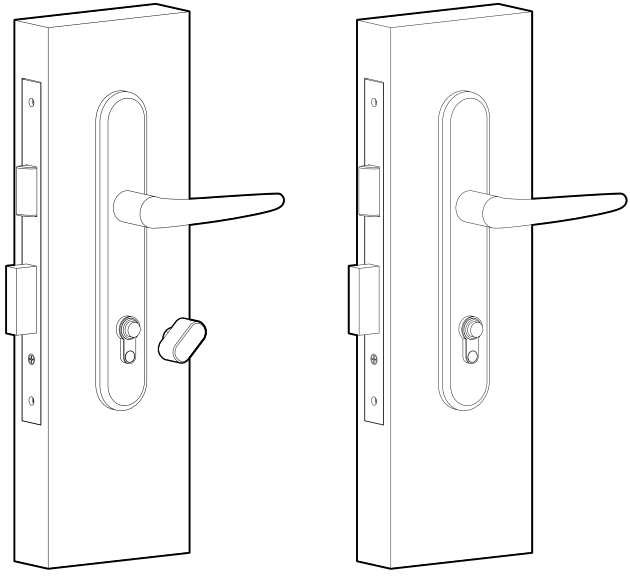

2c **Place mounting plate onto lock cylinder and secure it with the Allen key provided.**

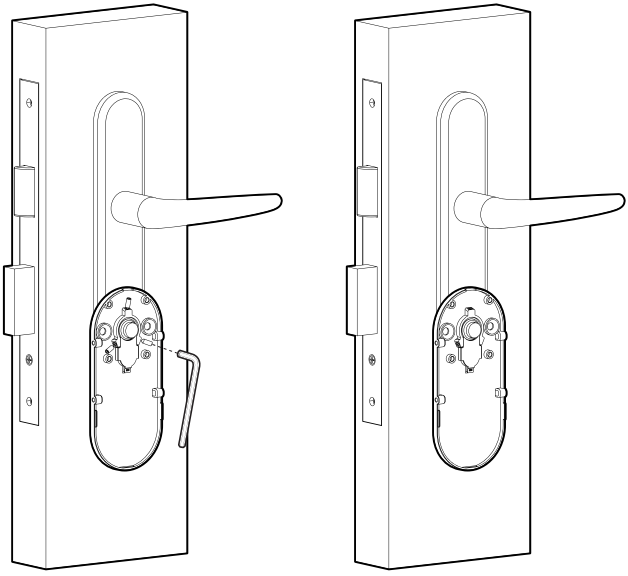

2d **Secure the thumbturn back onto the lock cylinder. After which, please refer to 4a and 4b to complete the installation.**

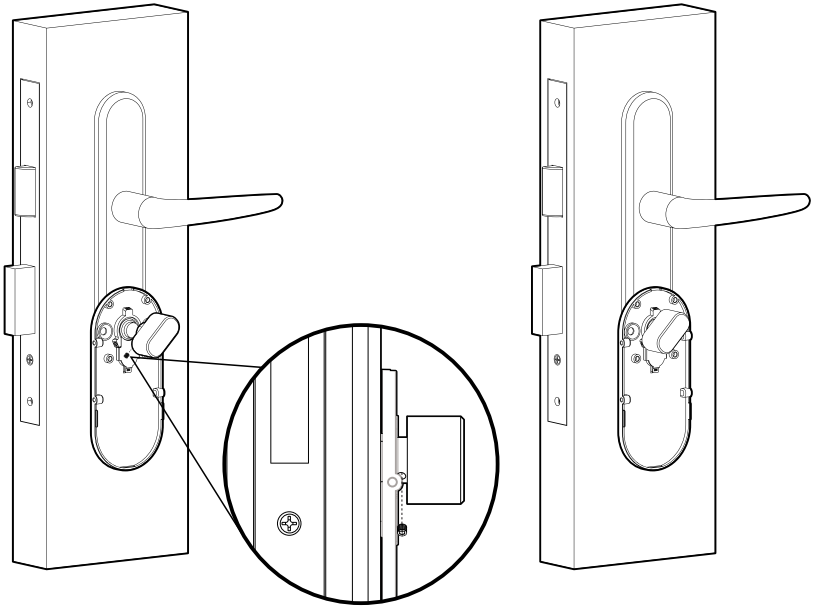

Installation Instructions

Non-Removable Thumbturn Installation

3a **Remove screw from the lock cassette and remove the cylinder.**

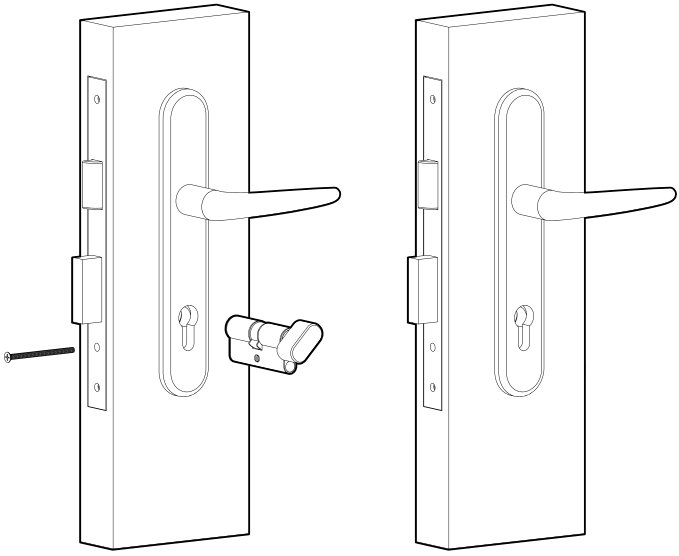

3b **Remove the thumbturn from the lock cylinder.**

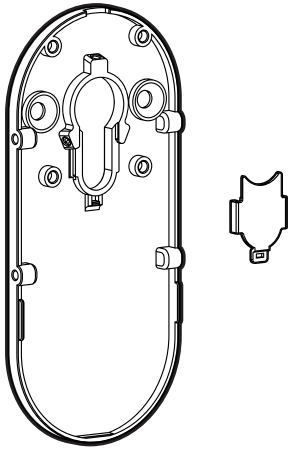

3c **Install the cylinder from the front of the mounting plate.**

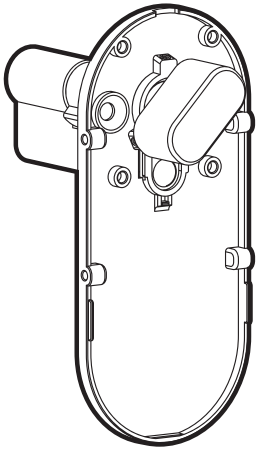

3d **Place the cylinder plate back onto the mounting plate and secure it with 3 screws.**

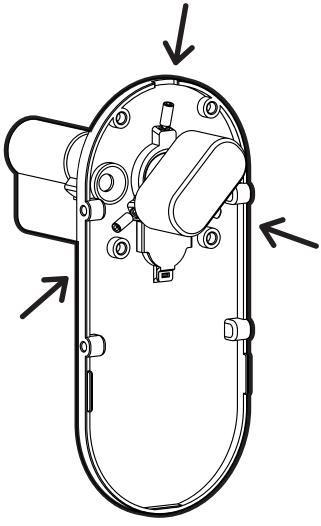

3e **Reinstall the cylinder into the door and secure it with the screws from the lock casette. After which, please refer to 4a and 4b to complete the installation.**

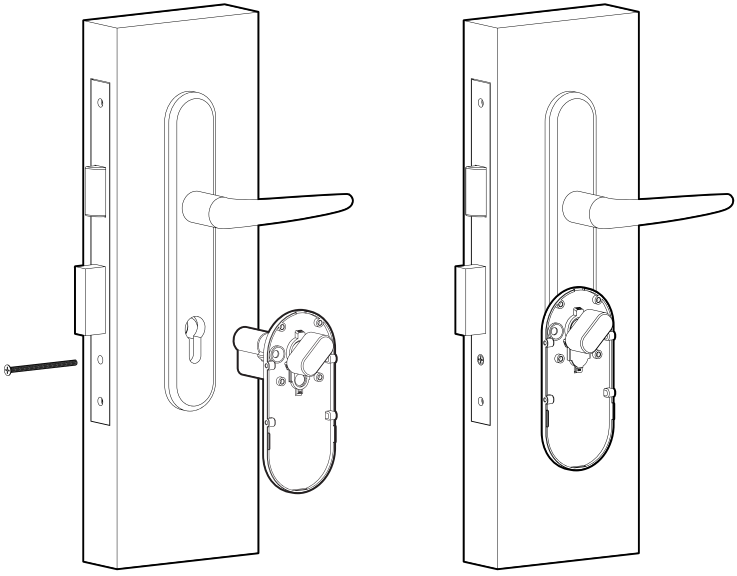

4a Install the lock body onto the mounting plate and secure the sides with 4 M3 screws.

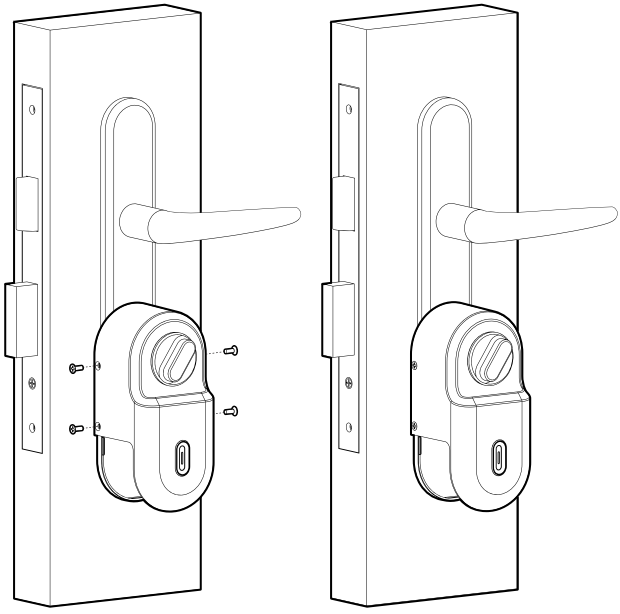

Screws

B 5mm (0.20")

4b Install the battery cover and turn the screw to the 'locked' position.

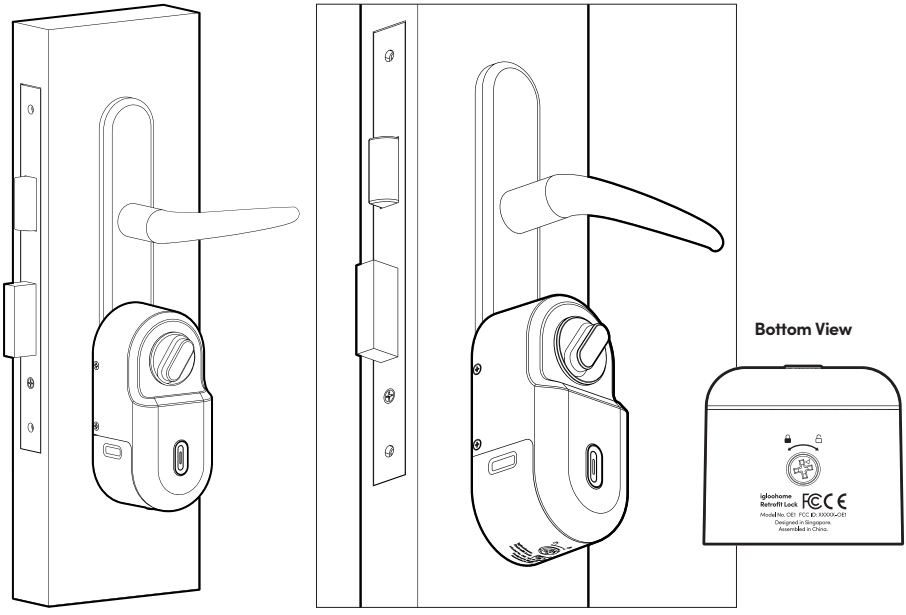

Installation Instructions

Door Sensor Position

1 **Align the Door Sensor to the Multi-Function button.**

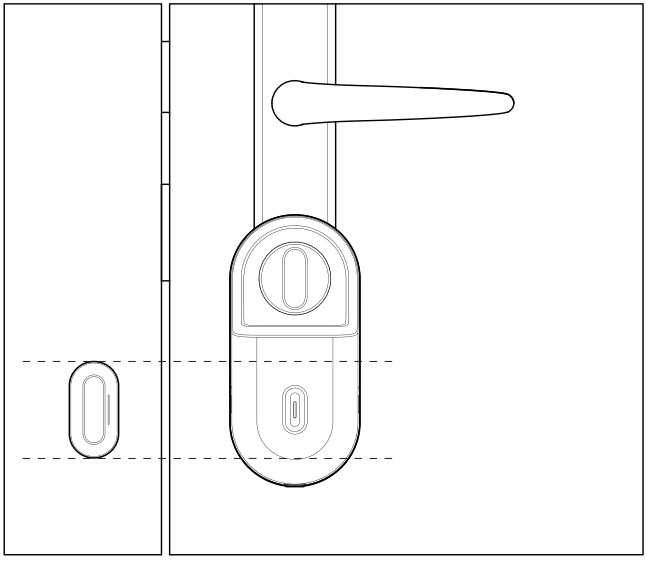

2 **Place the Door Sensor in the orientation with the indicator facing the lock.**

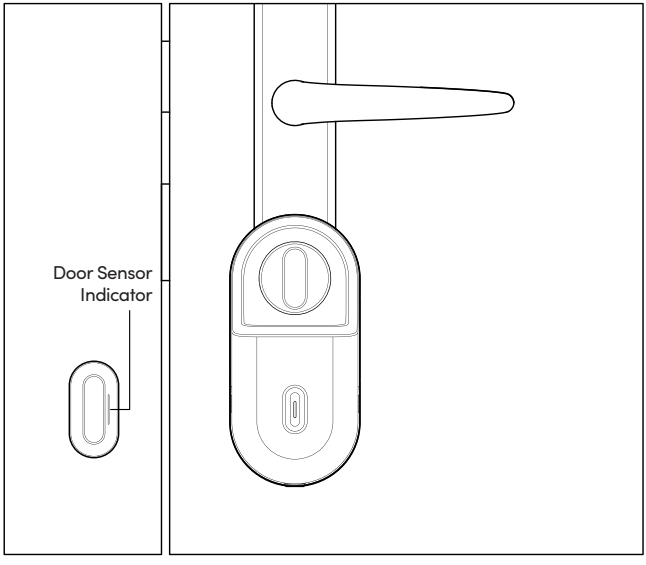

Calibrating your Lock

a **Ensure door sensor is installed properly and click next.**

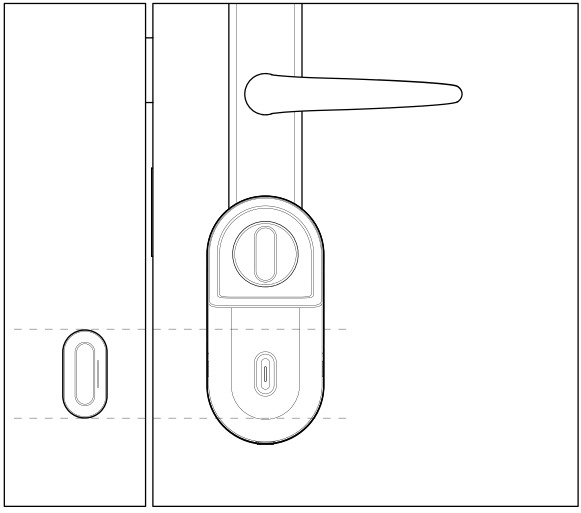

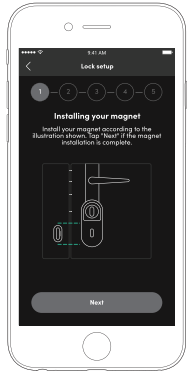

b **The lock will check your battery level to ensure an optimal calibration experience.**

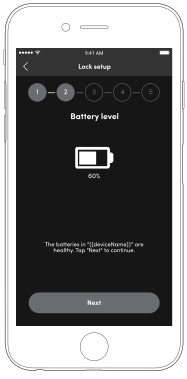

c **Turn the thumbturn to unlock, ensure it has been turned to its maximum position.**

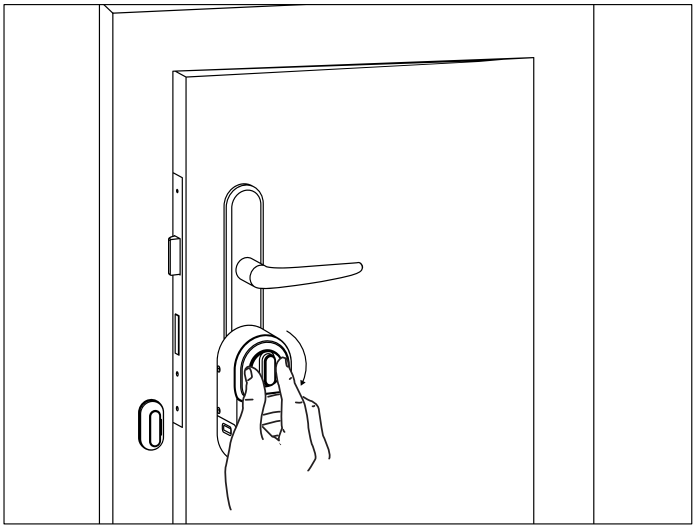

d **Open the door slightly ajar, ensure the latch bolt is leaning on the door. You will hear an audio indicator to notify you that you can proceed to the next step. Click next to proceed.**

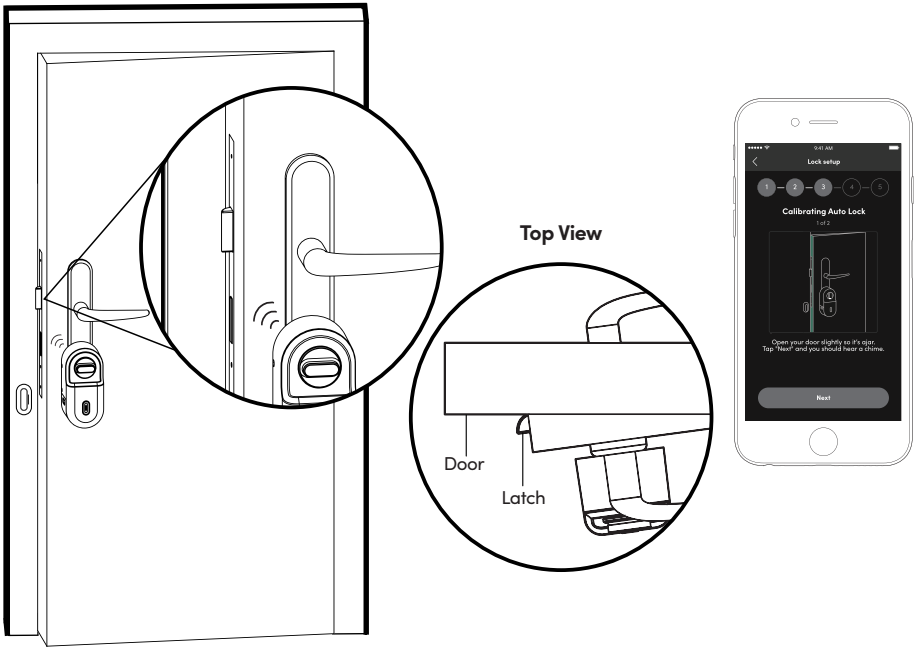

e **Close the door fully while keeping it unlocked. You will hear an audio indicator to notify you that you can proceed to the next step. Click next to proceed.**

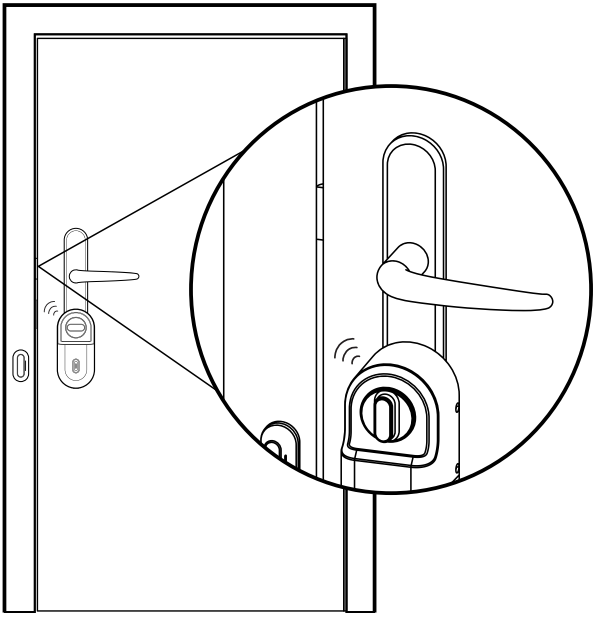

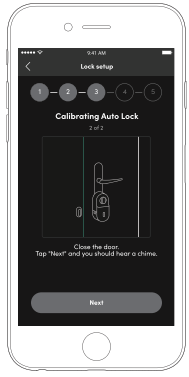

f **Your Retrofit lock will automatically calibrate itself for your door. There will be an audio alert and the LED Indicator will show green upon completion.**

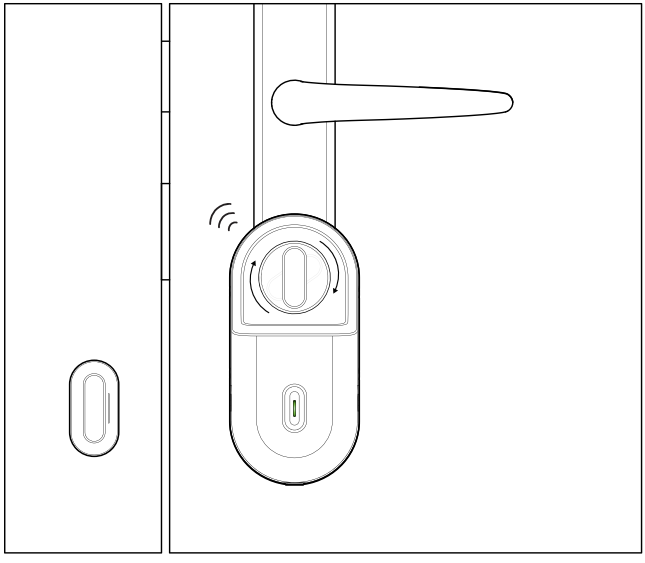

g **If you have a handle on the door's exterior, select the option.**

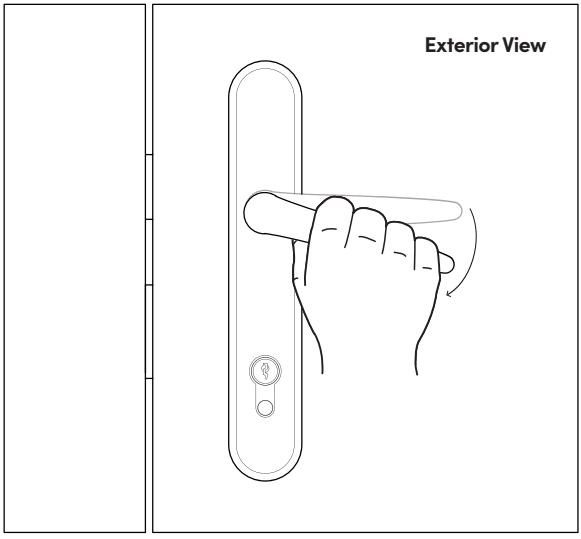

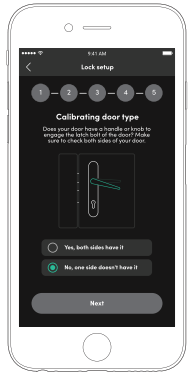

h **Congratulations, you have completed the calibration!**

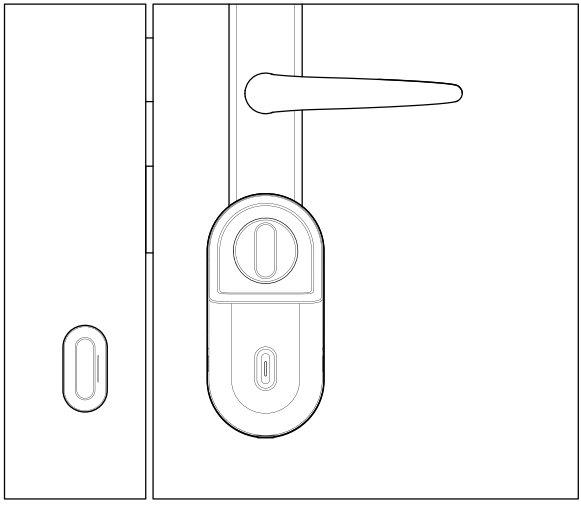

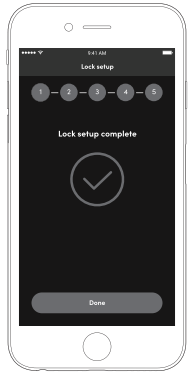

**Note: You may perform the calibration again from the Settings tab in the igloohome app.*
**It is recommended that calibration be done every 9 months.*

Testing Lock Functionalities

a

Manual Relock and Unlock

Manually rotate the thumbturn of the retrofit lock. Rotation of the thumbturn should be smooth and easy.

b

Bluetooth Unlock and Auto Lock

1. Ensure Retrofit Lock is in a locked state.
2. From the igloohome app, press on the lock icon.
3. Retrofit Lock should unlock with LED Indicator flashing Blue followed by Green, with an audio indicator.
4. The Retrofit Lock should lock when the door is completely closed.

Features

PIN Code/ Bluetooth

Bluetooth Master Key

The Retrofit unlocks with Bluetooth via the app.

Bluetooth Guest Key

Time-sensitive Bluetooth keys can be generated and shared with guests.

Lock

Auto Lock

The Retrofit locks automatically when door is closed. Users can configure the delay or deactivate this if they prefer to. Do note that function will only work when Door Sensor is installed.

Auto Unlock

Works with the igloohome app to automatically unlock your door when you are within the set Bluetooth range.

Manual Relock

User can press and hold the “unlock” icon on the keypad to manually lock the Retrofit Lock.

Battery

Low Battery Alert

An intuitive audio and LED alert will prompt you to change the batteries when it runs low.

Features

Security / Alarms

Obstruction Alarm

The lock will sound an alarm if the bolt tongue cannot be extended or retracted fully to alert the user of any obstructions.

Activity Logs

Entry via PIN codes and Bluetooth Key will be logged in the app.

Bluetooth key access logs are updated in real-time and PIN code access logs are updated when the owner uses a bluetooth key or update logs.

Others

Volume Control

Volume is adjustable to your preference. Select from 0 (mute) to 5 (loudest).

Unlocking

a Bluetooth

1. Open your igloohome app
2. Tap on the 🔒 icon
3. The LED Indicator will flash green twice with 4 short ascending tones once unlocked

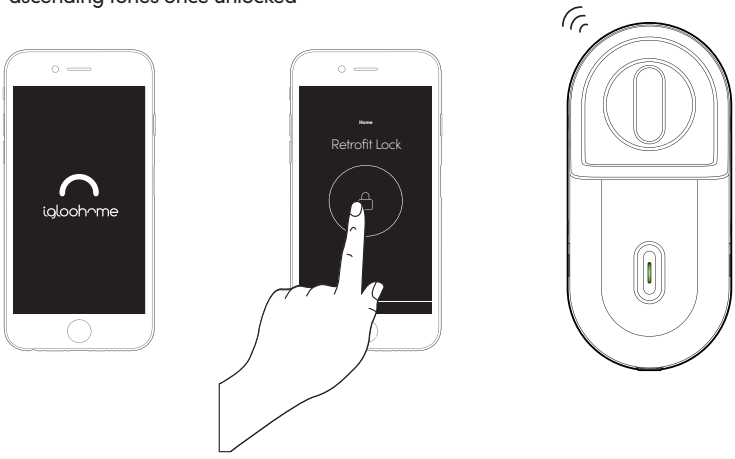

b Thumbturn

Twist the thumbturn to manually unlock from the inside.

Left-hand Installation

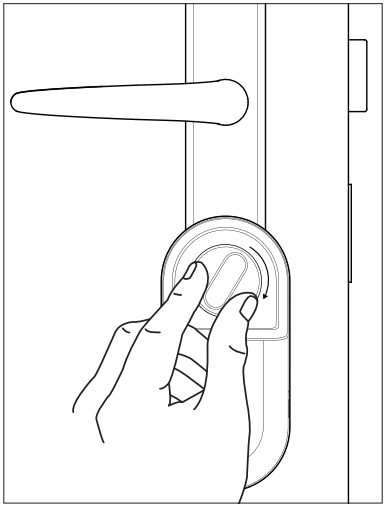

Right-hand Installation

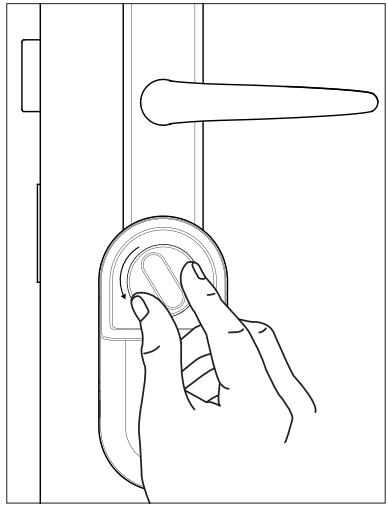

C Multi-Function Button

1. Press the Multi-Function button to unlock
2. The LED Indicator will flash green twice with 4 short ascending tones once unlocked.

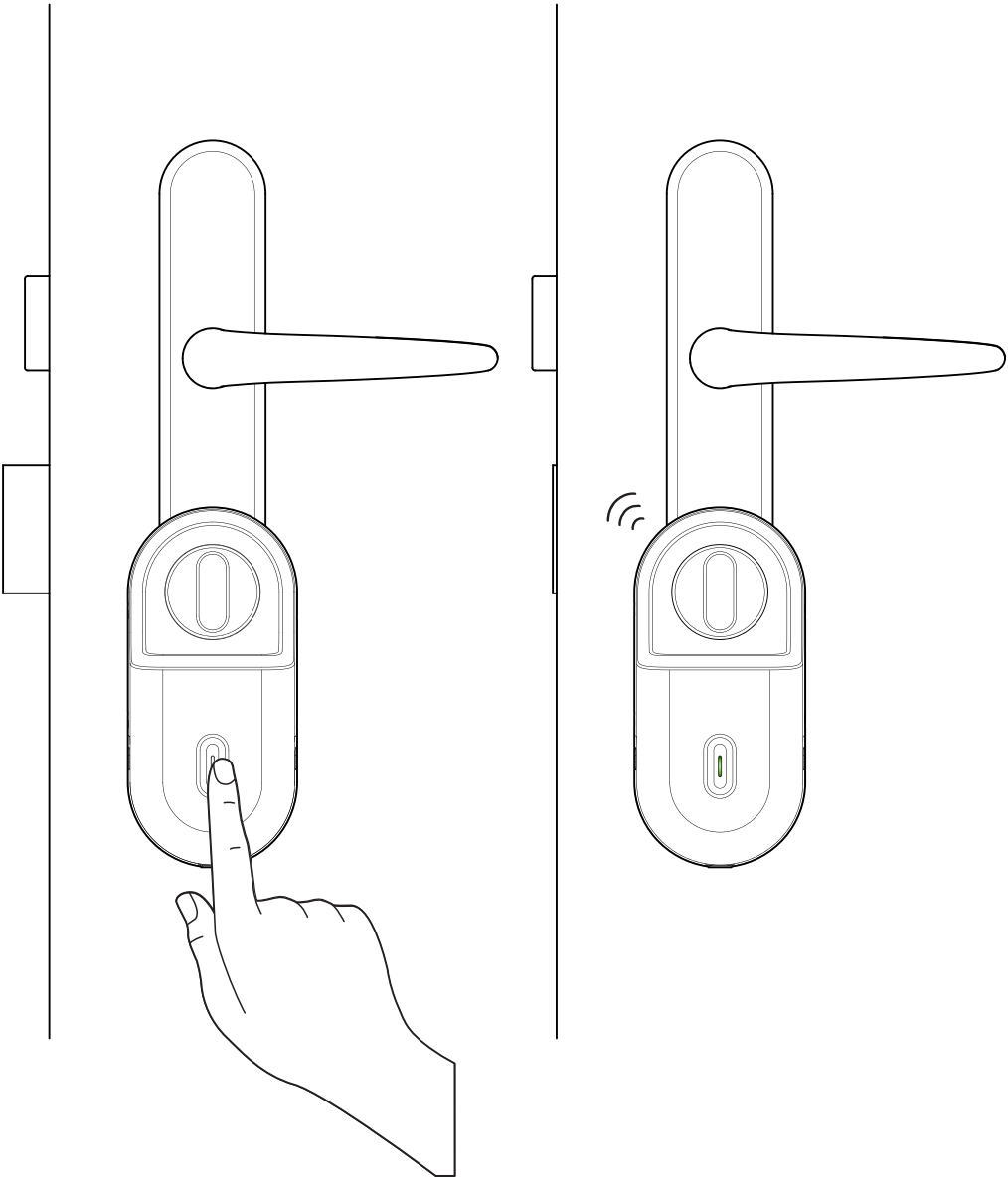

Locking

a Auto Lock

The Retrofit locks automatically when door is closed.
User can configure the delay or deactivate* Auto Lock if they prefer to.

Note: Function will only work when Door Sensor is installed.

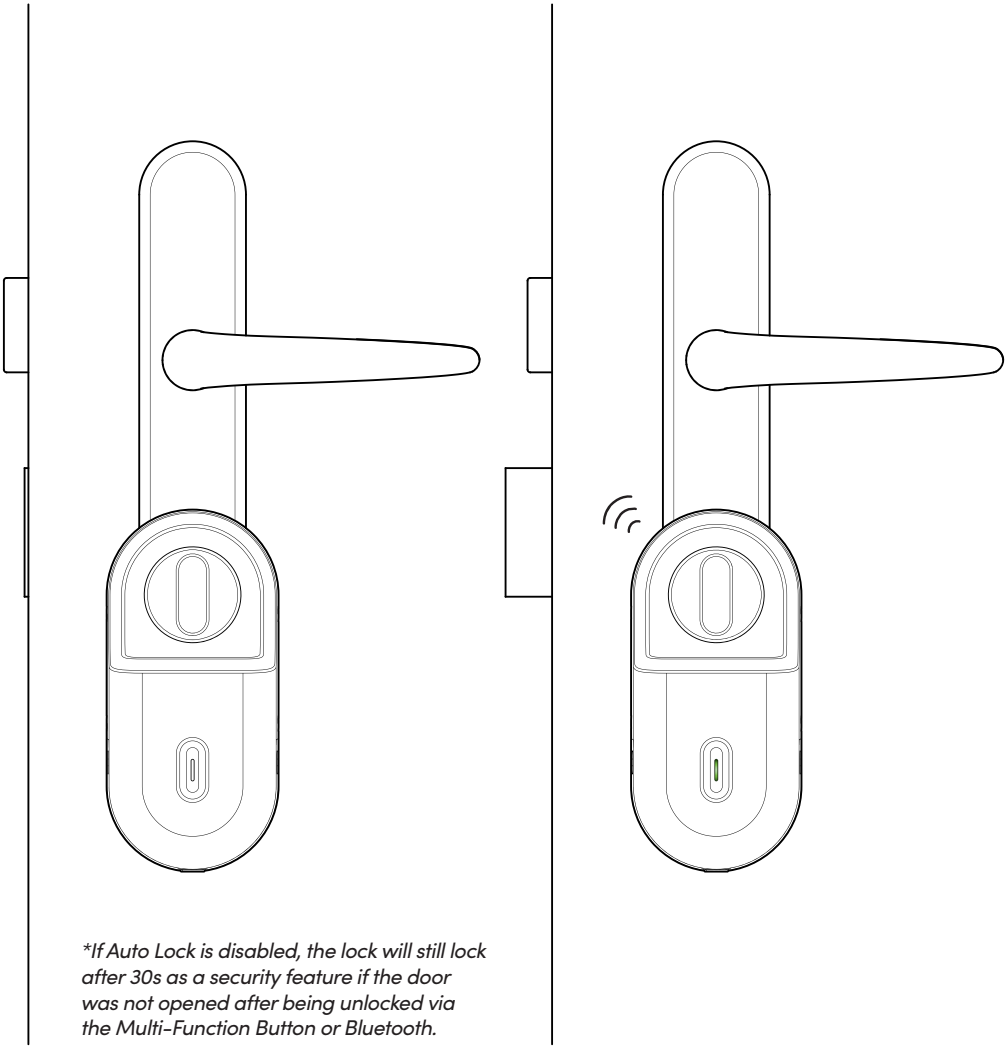

**If Auto Lock is disabled, the lock will still lock after 30s as a security feature if the door was not opened after being unlocked via the Multi-Function Button or Bluetooth.*

b Multi-Function Button

In the case where the Auto Lock function is disabled or does not work, press the Multi-Function Button to lock the door from the inside.

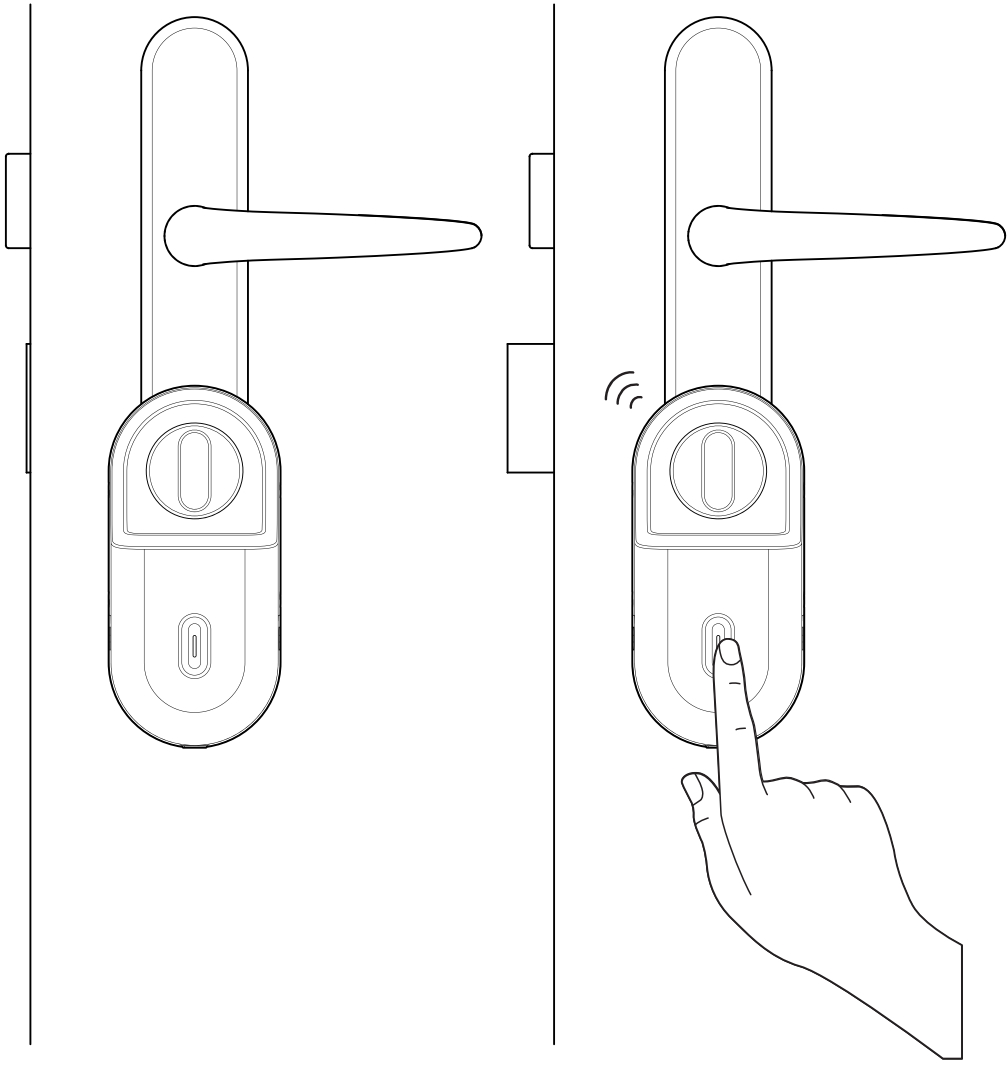

C Thumbturn

In the case where the Auto Lock function is disabled or does not work, twist the thumbturn to manually lock the door from the inside.

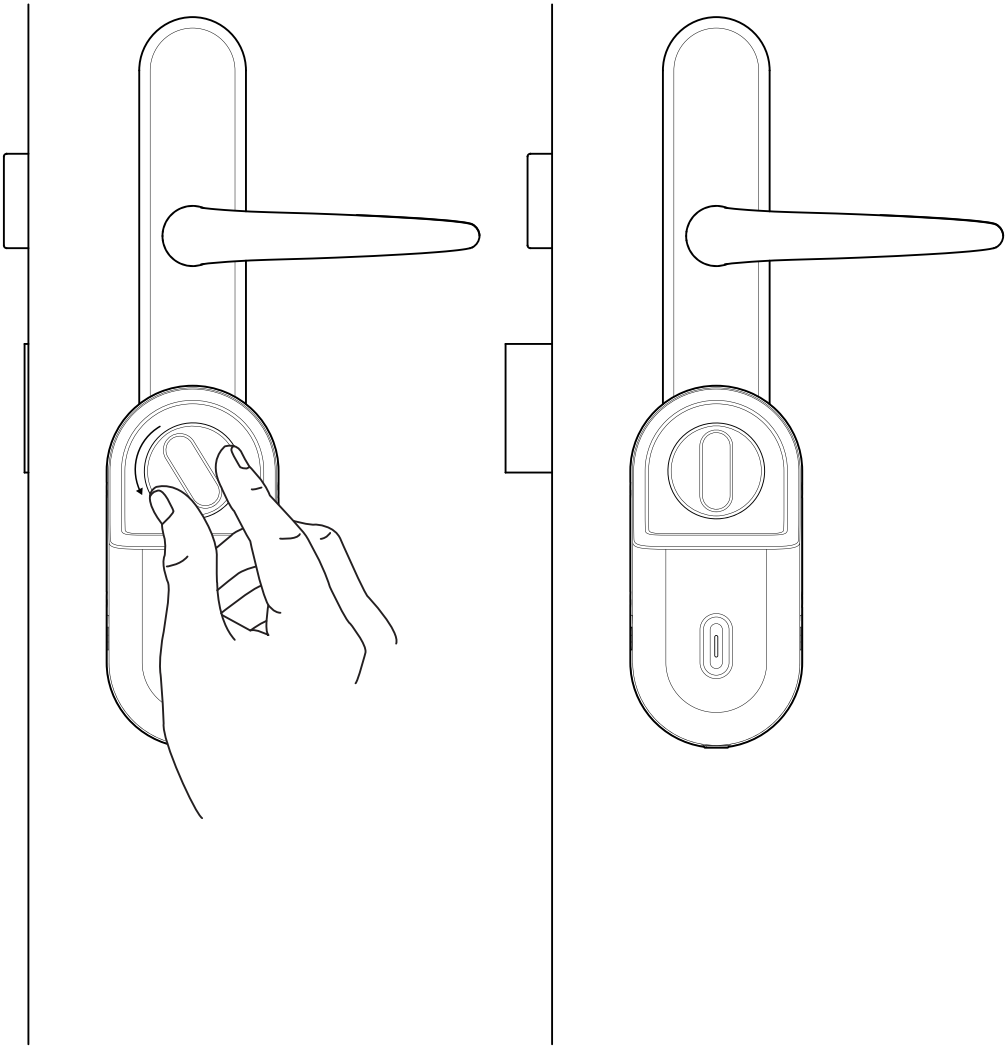

App Onboarding

1 Register as a Lock User

a) Download the igloohome app from the App store / Play store.

b) Create an account and login.

2 Pairing

a) Select **[Add new igloohome lock]**

Note: For existing users with other paired locks, go to **[Add and Manage]**, select **[Add Lock]** and follow the instructions.

3 Setting Master PIN code

Before proceeding, turn on your Bluetooth and ensure that you are within Bluetooth range of the lock.

Go to **[Access]** and customize your **[Master PIN]** by editing it.

Managing Access in App

1 Bluetooth Guest Key

Bluetooth Guest Key can be shared with other users for mobile access. It allows your guests to unlock the igloohome smart lock via Bluetooth.

There are 3 steps to using a Shared Bluetooth Key

1. Under **[Access]**, create **[+Access]** and choose **[Bluetooth Key]** under **[Access Type]**. Proceed to share the key after it is created.
2. Guest receives the Bluetooth Key by one of these methods:
   - Clicking the URL given and follow the instructions.
   - Claiming Bluetooth Key under **[Configuration]**.
3. Guest can now use the Bluetooth Key under the Guest Bluetooth Key Section whenever he/she is within range of the lock.

Notes:

- The owner can revoke the Bluetooth Key in App.
- Bluetooth Key must be accepted within 1 hour generation before it expires.

Changing Batteries

1 **Rotate the screw to the 'Unlock' icon to release the battery cover.**

Bottom View

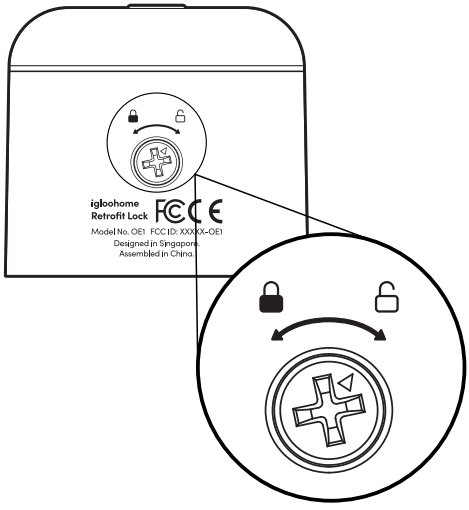

2 **Remove the battery cover.**

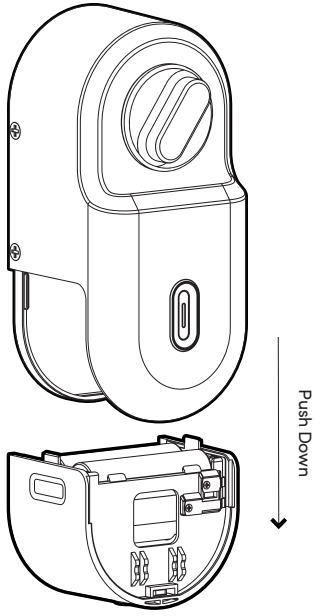

3 **Remove batteries.**

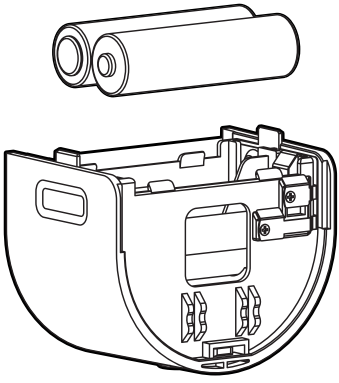

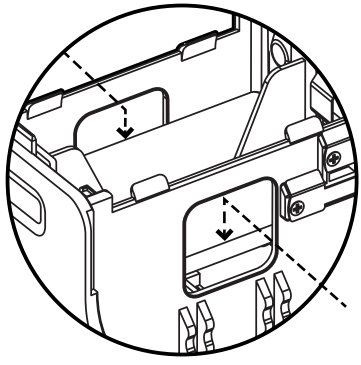

The holes at the side were designed to help users easily remove batteries.

3 **Place new batteries in.**

Round terminals - Positive,
Plate terminals - Negative

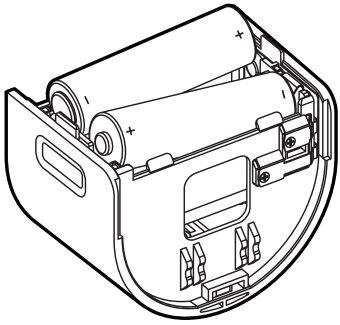

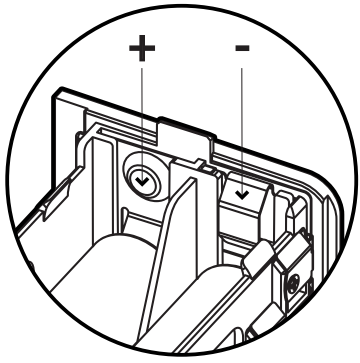

h **Place the battery cover back and turn the screw to the 'locked' position.**

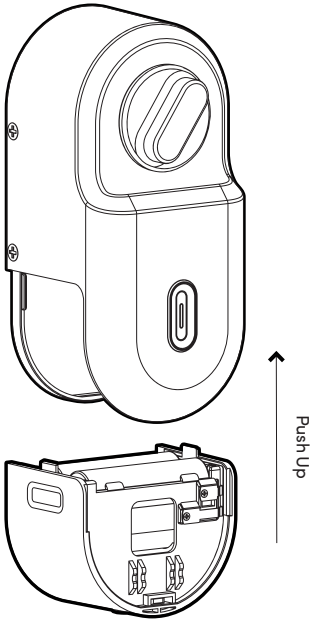

Bottom View

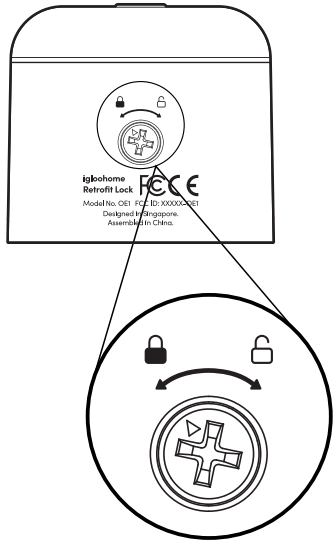

Connect with Airbnb

1 Connect with Airbnb

Connecting the lock with Airbnb automates the generation of PIN codes for your Airbnb guests based on their approved reservations.

Here are the steps to activate it

Step 1: Connect to your Airbnb

Under **[Account Settings]**, select **[Connect with Airbnb]**, then click **[OK]**.

Step 2: Connect to Airbnb listings

Under **[Reservations]**, click the **[Add]** icon to select a home to connect to.
Select Airbnb Listing and PIN Time to associate.

Note:
- Emails with PIN code will be sent to the guest between 1 to 48 hours before check-in time (configurable).
- PINs will only be valid between the check-in and check-out times.

Step 3: Change Check-in and Check-out time

Under **[Add and Manage]**, select **[Manage Properties]** followed by the listing to view or edit its details.

Notes:
- If the access mail has not been sent, changing your check-in/check-out time via the app modifies the start and end time of the PIN codes to be shared with your guest.
- If the access mail has been sent, changing these details will only affect the next reservation.
- Changing these details on the igloohome app does not update the check-in/check-out time on the listing on the Airbnb website.

2 Disconnect Airbnb

Should you prefer to generate PIN codes for your guests manually, you may disconnect your Airbnb listing from the igloohome home listing with the steps below.

1. Under **[Reservations]**, disconnect all the listings (if any).

2. Under **[Account Settings]**, select **[Disconnect with Airbnb]**.

Should you wish to completely disconnect your Airbnb account from your igloohome account, make sure that all your Airbnb listings have been disconnected in the above step, then go to:

Airbnb Host Website > Connected Apps > Select igloohome to disconnect

Audio and LED Indications

Actions	Indications
Bluetooth Connection	LED Indicator flashes Blue
Successfully Unlocked	Ascending 4 fast tones after unlocking and LED Indicator flashes Green twice
Successfully Locked	1 long beep after locking and LED Indicator flashes Green for 2 seconds
Low Battery Alert	3 fast descending tones after locking
Obstruction Alarm	6 sets of 4 short beeps
Rotation Calibration completed	1 long beep and LED Indicator shows Green
Unpairing	4 short descending beeps and LED Indicator flashes Blue
Hard Reset / Unpair	Descending 3 slow tones
Successful Pairing	Ascending 3 fast tones

Troubleshoot

Compliance

This device complies with part 15 of the FCC Rules. Operation is subject to the following two conditions: (1) this device may not cause harmful interference, and (2) this device must accept any interference received, including interference that may cause undesired operation.

Any changes or modifications not expressly approved by the party responsible for compliance could void the user's authority to operate the equipment.

NOTE: This equipment has been tested and found to comply with the limits for a Class B digital device, pursuant to Part 15 of the FCC Rules. These limits are designed to provide reasonable protection against harmful interference in a residential installation.
This equipment generates, uses and can radiate radio frequency energy and, if not installed and used in accordance with the instructions, may cause harmful interference to radio communications. However, there is no guarantee that interference will not occur in a particular installation.

If this equipment does cause harmful interference to radio or television reception, which can be determined by turning the equipment off and on, the user is encouraged to try to correct the interference by one or more of the following measures:

- Reorient or relocate the receiving antenna.
- Increase the separation between the equipment and receiver.
- Connect the equipment into an outlet on a circuit different from that to which the receiver is connected.
- Consult the dealer or an experienced radio/TV technician for help.

This equipment complies with FCC radiation exposure limits set forth for an uncontrolled environment. This equipment should be installed and operated with a minimum distance of 20 cm between the radiator and your body.

For enquiries go to:
igloohome.co/support