User guide
Padlock 2E.

igloowrks

Version 0.1 01/23

Hi there!

Hi there!

We're so glad you've decided to join us on this journey to create a world without keys. In this guide, you'll find everything you need to get started with your lock.

If you do not find what you're looking for, reach out to us at **support@iglooworks.co**. We're here to help.

Support & Help Portal:
go.iglooworks.co/support

Let's stay connected:

support@iglooworks.co
Singapore: +65 3129 2464
USA: +1 929 224 0688

Tip: As we continuously improve our products and services, the latest version of this user guide can be found in the support & help portal!

Table of Contents

What's Included	4
Specifications	5
Lock Anatomy	6
Lock Features	7
Managing Batteries	9
Charging the Batteries	13
Getting Started	14
Pairing the Lock	15
Mode of Access	16
Manage Lock Features	17
Manage Lock Settings	19
Audio and LED Indications	20
Hard Reset	21
Admin Features	22
igloodeveloper	23
Troubleshoot	24

What’s Included

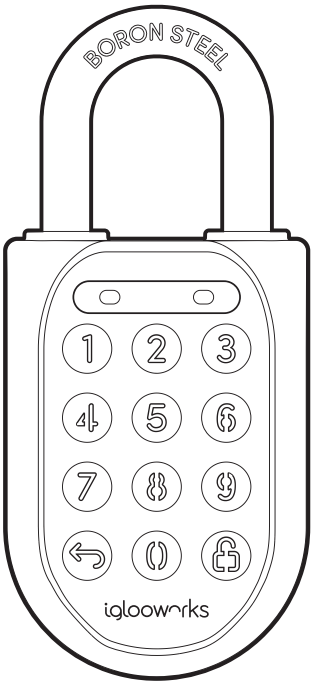

Padlock 2E

Torx Screwdriver

USBC-USBC Cable

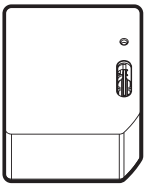

Lithium Rechargeable Battery

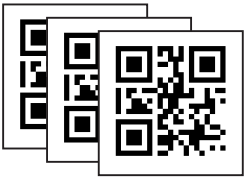

QR Code Stickers x3

Specifications

SKU	SP2E
Body	Zinc Alloy, Stainless Steel, Rubber
Shackle	Boron Steel
Gross (with packaging)	0.5kg / 1.1 lbs
Net	0.5kg / 1.1 lbs
Modes of access (Entry)	Pin Code, Bluetooth
Power type	Rechargeable Lithium battery
Battery life	Up to 12 months*
Emergency power type	USB-C jumpstart
Battery operating temperature	-20 to 50°C / -4°F to 122°F
Operating temperature	-30°C to 55°C / -22°F to 131°F
Certifications	IPX8, CE, RoHs2, FCC, CEN-3, IK-09, ISED, GITEKI, UKCA
Protocols	Bluetooth 5.0, algoPIN™ technology
Usage	Suitable for both indoor and outdoor usage

* Battery life may vary at extreme temperatures.

Front

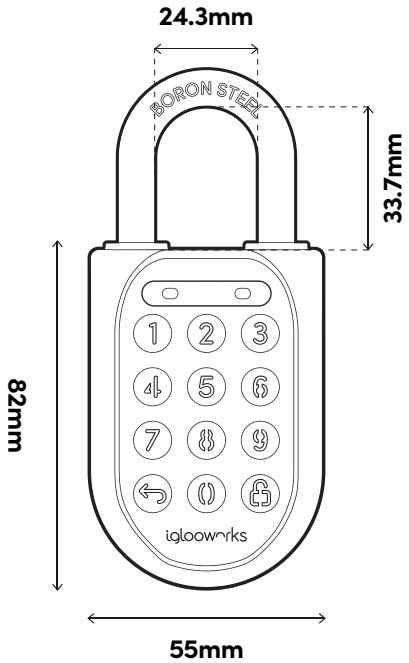

Side

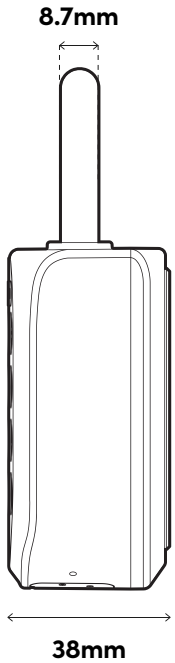

⚠ For damage resulting from incorrect use of lock, use of lock in potentially explosive environments, or use of lock outside of stipulated specifications, the customer bears sole responsibility. igloohome accepts no liability whatsoever.

Lock Anatomy

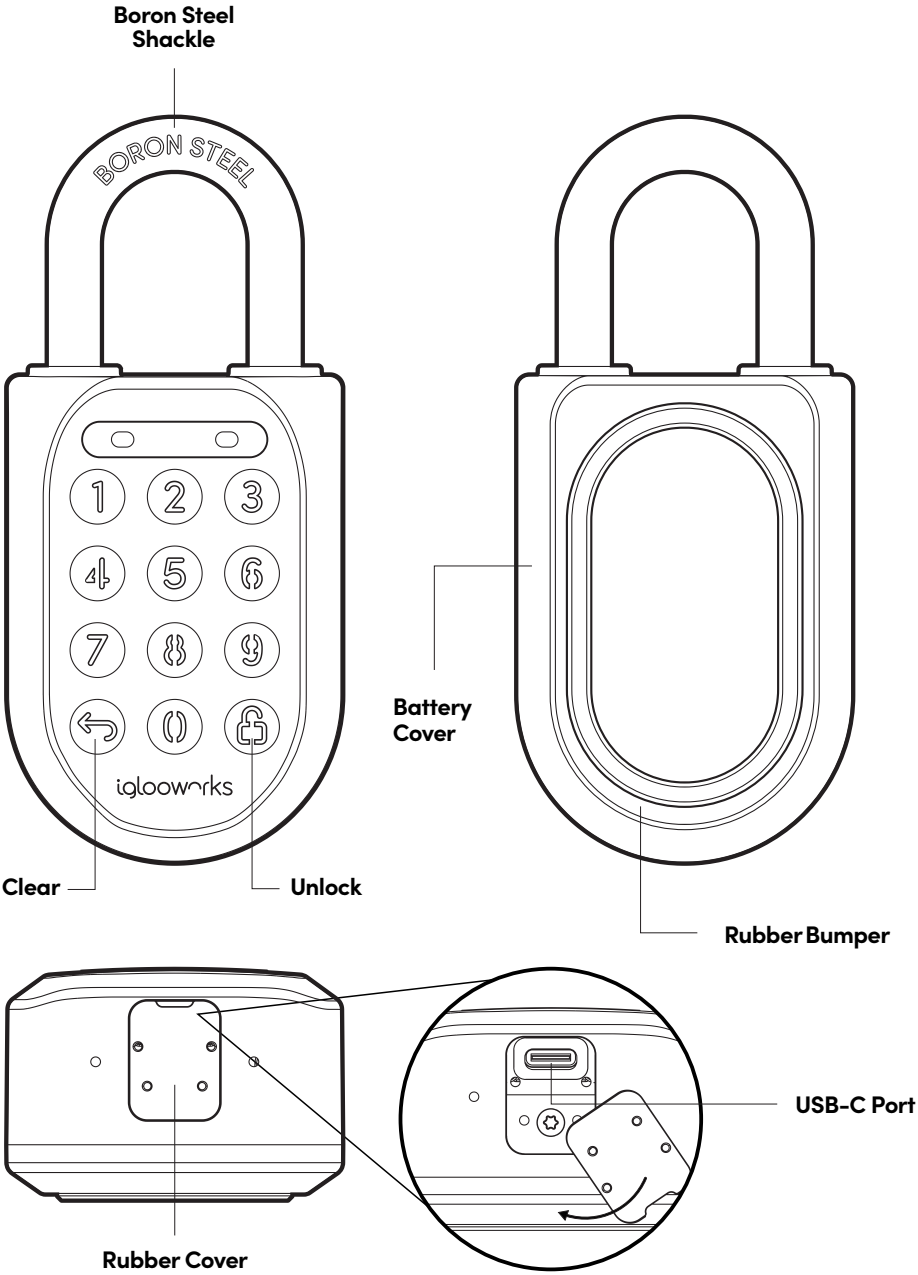

Lock Features

PIN Code/Bluetooth Key

Master PIN Code

The Padlock 2E unlocks with a permanent Master PIN Code.

Master Bluetooth Key

The Padlock 2E unlocks with Bluetooth via the app.

User PIN Code

The Padlock 2E supports multiple types of User PIN codes, e.g. One-Time, Permanent, Recurring & Duration which can be generated and shared via the app.

User Bluetooth Key

The Padlock 2E supports User Bluetooth keys which can be generated and shared via the app.

Battery

Low Battery Alert

Intuitive audio and visual alerts will prompt you to change the batteries when it runs low.

Emergency Jumpstart

Easily jumpstart the lock with a USB-C cable connected to a power bank if batteries are drained.

Lock Features

Others

Security Lockout

Keypad is disabled after several incorrect access attempts.

Decoy PIN Code

Heighten security and throw off onlookers by entering random digits before your actual PIN code.

Auto Lock

Automatically locks once the padlock is shut to give you greater peace of mind.

Manual Relock

Manually lock the device by holding the 'Unlock' icon if Auto Lock does not work.

Relock Reminder Alert

Lock will sound an alert to remind users to fasten the shackle.

Volume Control

Adjust the volume according to your preference. Select from levels 0 (mute) to 5 (loudest).

Obstruction Alarm

The lock will sound an alarm if the shackle cannot lock or unlock to alert the user of any obstructions.

Keypad LED Toggle

Turn the backlight from the keypad buttons on or off.

Encryption

AES 128-bit

Learn how to access, activate, and deactivate these features from pages 17 - 18.

Managing the Battery

*NOTE: Batteries sold separately. If you just want to charge the lock, see section b on page 13.

a Changing the battery

1. Padlock must be unlocked. Pull the shackle to 'open' position.

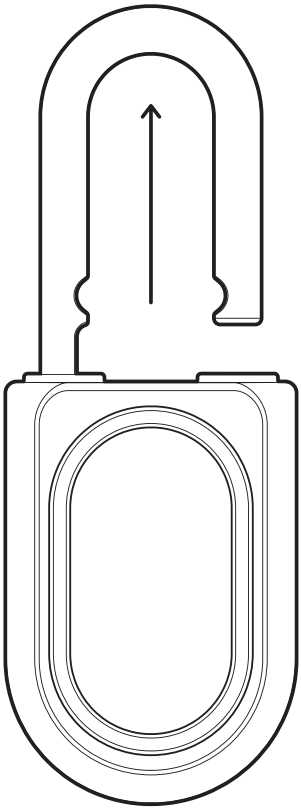

2. Pull the rubber cover from the bottom of the Padlock out, and release the Torx screw.

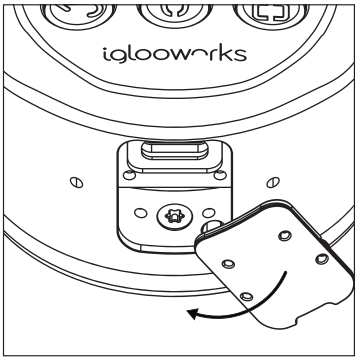

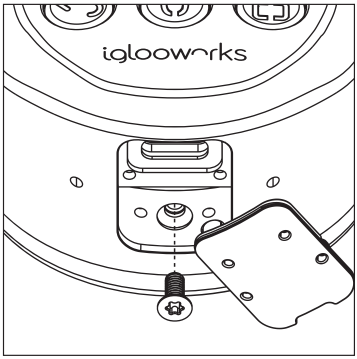

3. Release the Torx screw located below the shackle on the inside of the Padlock and remove the back cover.

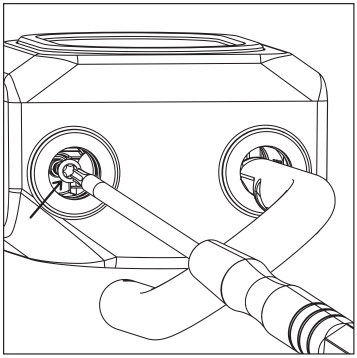

⚠ Turn the screw anticlockwise 5 times till it pops up. The screw will be retained in the lock.

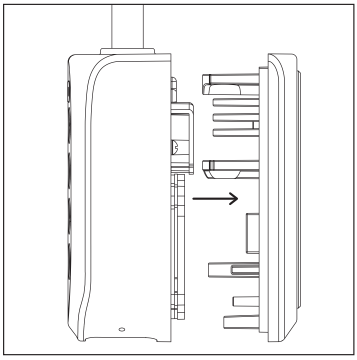

4. Release the 3 screws that secures the battery cover and pull the tab to remove the battery.

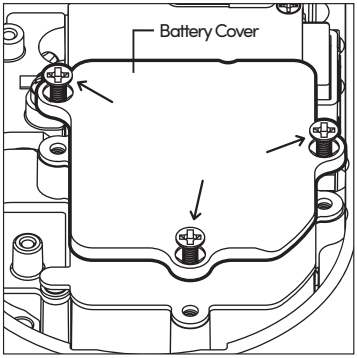

⚠ Turn the screws anticlockwise 5 times till it pops up. The screw will be retained in the battery cover.

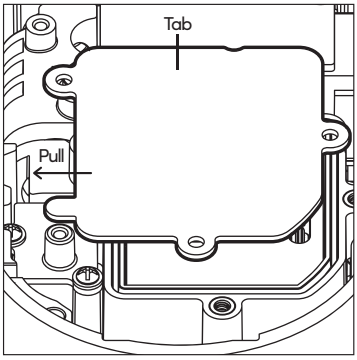

5. Replace the Rechargeable Lithium Battery, close the battery cover and secure it with the 3 screws.

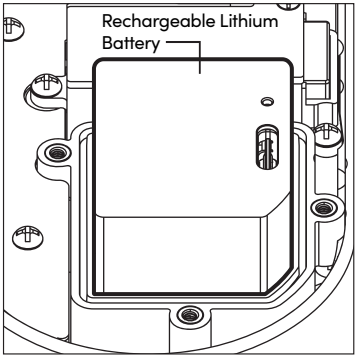

Note: Extra batteries are sold separately.

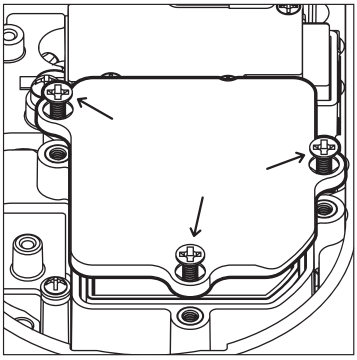

6. Insert the back cover and tighten the Torx screw located below the shackle on the inside of the Padlock.

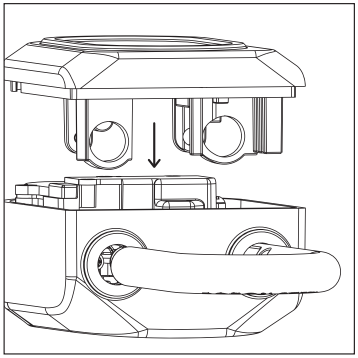

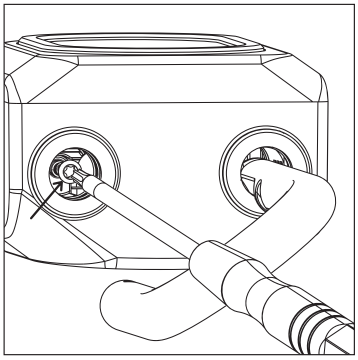

7. Tighten the Torx screw at the bottom of the Padlock and plug the rubber cover into place.

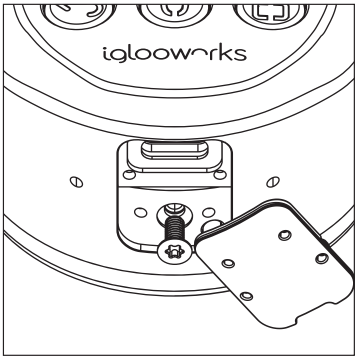

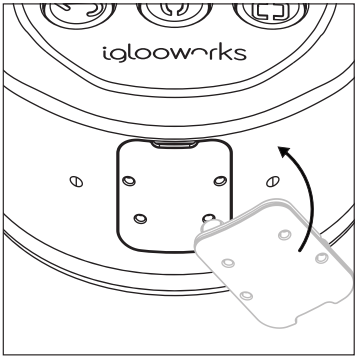

8. Push the shackle to 'close' position for the Padlock to automatically lock.

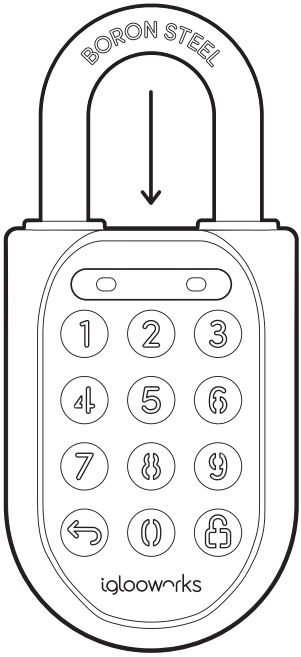

b Charging the battery

1 Charging via the USB-C port on the Padlock 2E

1. Connect the USB cable into the USB-C port on the Padlock 2E
2. Insert the other end of the cable into a USB-C Power Adapter (not provided) and plug it into a power outlet.

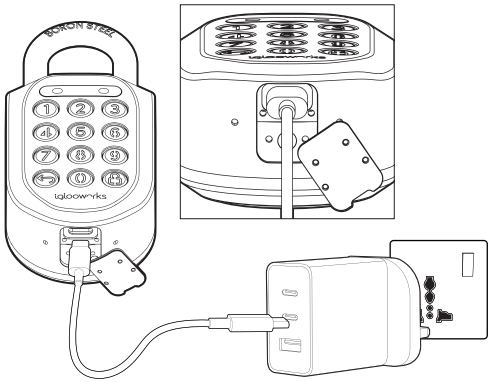

2 LED indications for charging status

1. Fully charged - Breathing green LED
2. Charging - Breathing red LED

⚠ It is recommended that you fully charge the Padlock 2E before usage.
Charging requirements: Prescribed charger is 5V 1A (5W). Charging time to 50% and 100% is 30 minutes and 1 hour respectively.

Getting Started

All access begins with the Dashboard. Speak with your owner or admin to get your accounts set up before you proceed.

Once you receive an invite, you can register for an iglooworks account to start operating the lock on the ground.

The iglooworks mobile app allows for on-the-ground management of your locks. Authorized members can perform operational tasks without fuss.

Getting your iglooworks app account

Your app account is tied to your Dashboard account. If you're an existing member, you can access the iglooworks app with the same credentials. Otherwise, speak to your account owner to invite you as a member.

1. Download the iglooworks app on your smartphone via the App Store or Google Play Store.
2. Log in with your iglooworks account and organization ID.
3. Tap **[Enter]**.

Pairing the Lock

To wake the lock up, you can either

1. Press the Lock button for 5 seconds
2. Plug in the USB C cable

The lock will go back to sleep in 1 minute in the unpaired state.

Note:
Ensure that the lock is fully charged before using it. If the battery is completely flat, you may need to plug in the USB C cable and charge it.

Test the lock with the Factory PIN code before you begin the pairing process.

1. Wake the lock by pressing any button on the front body.
2. Tap ↩, then enter 1234567890, followed by 🔓.
3. The LED indicator on the lock will flash green when it is successfully unlocked. You will also hear four ascending tones.

Once you have tested it, you can now begin to pair the lock to your iglooworks account.

1. Select **[Locks]** from the menu.
2. Tap **[Pair New Lock]**.
3. Select the property.
4. Tap **[Next]**.
5. Select the lock model and follow the steps shown on the screen.

Note:
Ensure your Bluetooth and Location services are turned on. You may have to perform a Bluetooth sync after successfully pairing the lock to obtain the initial battery status of the device.

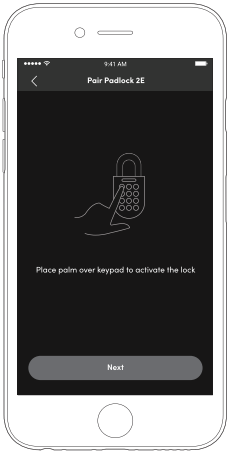

Modes of Access

a To unlock via PIN code:

1. Wake the lock by pressing any button on the front body.
2. Enter a valid PIN code, with or without decoy digits, followed by 🔓.
3. The LED indicator on the lock will flash green when it is successfully unlocked. You will also hear four ascending tones.

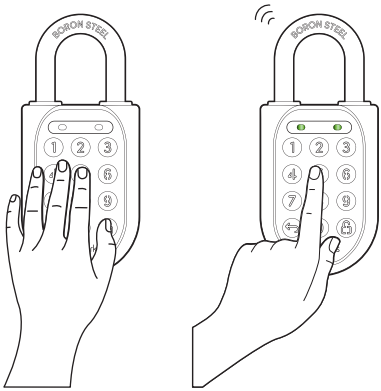

---

b To unlock via Bluetooth:
If you are an owner or admin, you will be able unlock the lock via Bluetooth. This is also possible for an authorized manager or lock users once permissions are granted via the Dashboard.

1. Select the lock you want to unlock.
2. Tap **[Sync & Unlock].**

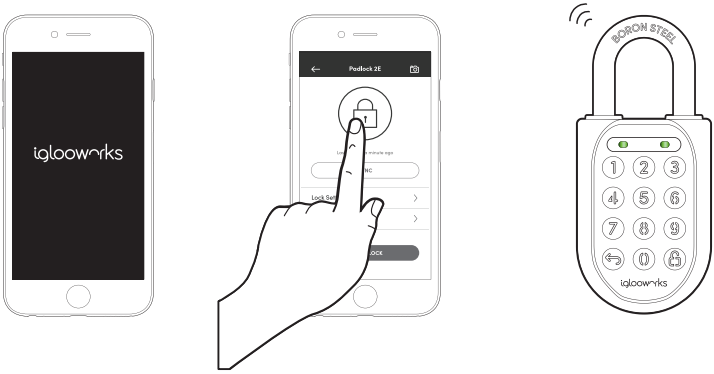

Note: Ensure your Bluetooth service is turned on and that you are within range of the lock.

Manage Lock Features

<table>
<tr><td>Auto Lock</td><td>You can configure the duration before Auto Lock is triggered:
*Please ensure you are within Bluetooth range of the lock and your Bluetooth function is turned on.

1. On your app, tap [Lock Settings].
2.Select [Auto Lock Timer]
3. Select from the list of preset durations or choose to never automatically lock.
4.Tap [Apply Changes].

If you choose to never automatically lock, you may wish to perform a manual relock: Hold the 🔓 on the keypad for 2 seconds. The LED indicator will flash green and you'll hear a long beep for successful relocking.</td></tr>
<tr><td>Security Lockout</td><td>You can configure the number of attempts before the Security Lockout mode is enabled:
*Please ensure you are within Bluetooth range of the lock and your Bluetooth function is turned on.

1. On your app, tap [Lock Settings].
2. Select [Security Lockout].
3. Select the number of attempts from 1 to 10, or choose to deactivate this function completely.
4. Tap [Apply Changes].

Once this is set, the lockout will be triggered after you exceed the number of attempts set.

Your lock will reject any further unlocking attempts via the same mode you used. You can disable it by trying another valid access mode.

<table>
<tr><th>Triggered</th><th>Security Alarm</th><th>Security Lockout</th></tr>
<tr><td>1st Time</td><td>30 Sec</td><td>1 Min</td></tr>
<tr><td>2nd Time</td><td>60 Sec</td><td>5 Min</td></tr>
<tr><td>3rd and Consecutive Time</td><td>90 Sec</td><td>10 Min</td></tr>
</table></td></tr>
<tr><td>Relock Reminder Alert</td><td>You can enable, disable and configure the duration before the alert sounds off:
*Please ensure you are within Bluetooth range of the lock and your Bluetooth function is turned on.

1. On your app, tap [Lock Settings].
2. Select [Relock Reminder Alert].
3. Configure the duration between 5 seconds to 10 minutes, or disable the alert.
4. Tap [Apply Changes].</td></tr>
</table>

Emergency Jumpstart	1. Connect the USB-A to USB-C cable to a power bank. 2. Plug the USB-C port into the jumpstart port on the lock. 3. Once the lock powers up, enter a valid PIN code within 20 seconds, followed by 🔓 to unlock.
Decoy PIN Code	1. Key in up to 8 random digits before your actual PIN code, followed by 🔓 to unlock.
Volume Control	To configure the volume of your lock: ***Please ensure you are within Bluetooth range of the lock and your Bluetooth function is turned on.** 1. On your app, tap **[Lock Settings].** 2. Select **[Volume].** 3. Select the volume level from 0 to 5 (softest to loudest). 4. Tap **[Apply Changes].**
Keypad LED Toggle	To configure the LED settings: ***Please ensure you are within Bluetooth range of the lock and your Bluetooth function is turned on.** 1. On your app, tap **[Lock Settings].** 2. Select **[Keypad LED Toggle].** 3. Turn it on or off. 4. Tap **[Apply Changes].** This feature is switched on by default.

Manage Lock Settings

Lock Information (View only)	You can view the lock information of the lock by: 1. Select the lock. 2. Tap **[Lock Information].**
Firmware Version (View only)	You have to be entitled to have the DFU rights in order to see this option: 1. Select the lock. 2. Tap **[Firmware Version].**
Delete Lock	You have to be an owner to delete a lock. 1. Select the lock. 2. Tap **[Delete Lock].** 3. Tap **[Confirm].**
Replicating a lock	You have to be an owner to replicate a lock. 1. Select the lock. 2. Tap **[Replicate Lock].** 3. Tap **[Select New Lock].** 4. Choose the new lock model from the list. 5. Place palm over new lock keypad to activate device and tap **[Next].** 6. Select the new lock product ID. 7. Tap **[Continue]** to start the replicating process. 8. Tap either of the options to continue: - Delete Previous Lock (Start the unpairing process for previous lock) - Proceed to Lock (Proceed to new lock screen)

Audio and LED Indications

Actions	Indications
Bluetooth Connection	LED Indicator flashes Blue
Successfully Unlocked	Ascending 4 fast tones after unlocked and flash Green LED 2 times
Successfully Locked	1 long beep after Padlock is locked and Green LED for 2 seconds
Incorrect PIN Code	4 short beeps and flash Red 2 times
Deleted PIN Code	3 sets of 4 short beeps and flash Red 2 times
Obstruction Alarm	6 sets of 4 short beeps and flash Red 2 times
Security Lockout Alarm	Low - High siren for 30 / 60 / 90 seconds and flash Red 2 times
Security Lockout Deactivated	2 long beeps
Charging in Progress	Breathing red LED flash when USB-C is connected
Charging Completed	Breathing green LED flash when USB-C is connected
Low Battery Alert	Descending 3 fast tones when keypad is woken up and breathing Red LED
Hard Reset / Unpair	Descending 4 slow tones
Power Start Up	1 long beep then 2 quick beeps

Hard Reset

To Hard Reset your lock:

1. Hold the ⮌ button for 10 seconds,
2. At the 10th second, the lock will enter a hard reset state and give out one long beep with red flashing LED for the next 10 seconds.
3. The interval of the RED LED flashes should be 0.5 sec ON and 0.5 sec OFF.
4. Key in the Master PIN followed by the 🔓 button in the next 10 seconds, else the lock will exit the hard reset status.

Note:
If Master PIN is correct, red flashing LED changes to green LED for 1 second and gives out another long beep for 1 second at the same time. Lock will be successfully hard reset.

* If Master PIN is wrong. Lock will give out the “Incorrect PIN” audio and LED indicator and exit the hard reset state.

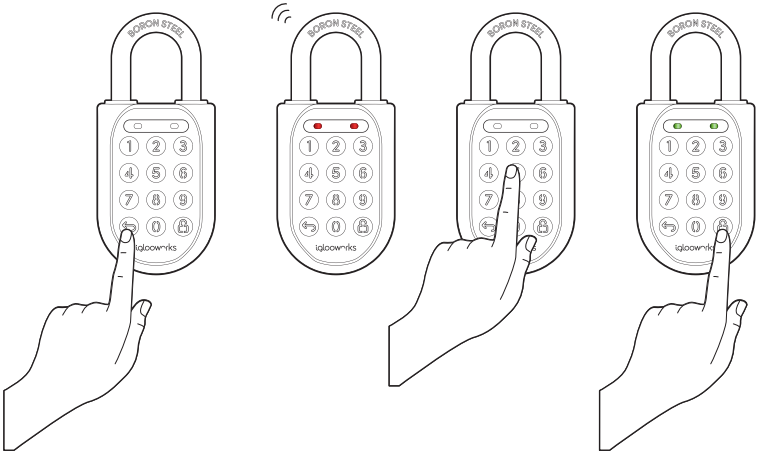

Admin Features

If you're an owner or admin, the Dashboard is an important aspect of the iglooworks suite of access solutions.

Speak with your BD representative to get your accounts set up before you proceed. The Dashboard works best with Google Chrome, Safari and Mozilla Firefox.

Quick Start Guide
go.iglooworks.co/QSG

Owner & Admin Guide
go.iglooworks.co/UGOA

igloodeveloper

This lock supports igloodeveloper services.

igloodeveloper
igloodeveloper lets you manage access via our software and smart access products through API and SDK documentations.

For more information, visit https://www.igloocompany.co/igloodeveloper.

Creating an igloodeveloper account	1. Visit developer.igloocompany.co on your desktop or mobile device. 2. Click **[Sign up here]** to register for a new account. 3. Fill in the fields shown on your screen. 4. Click **[Register]** 5. Confirm your account registration via the link sent to your email address. 6. You now have a verified igloodeveloper account!
Logging in to the igloodeveloper portal	1. Visit developer.igloocompany.co on your desktop or mobile device. 2. Log in with your verified igloodeveloper account credentials. 3. Click **[Log in].**
Resetting your password	If you have forgotten your password, 1. Visit the login page and select **[Forgot password?]** 2. Enter your registered email address. 3. Press **[Submit].** You will receive an email with a link and instructions on how to reset your password.

Troubleshoot

Hardware Troubleshooting:

I am unable to close the shackle to lock the padlock.

- Do an unlock via PIN code or Bluetooth and try to close the shackle again.
- Note that you might accidentally lock the padlock manually by holding the UNLOCK button for 2 seconds when the padlock is open.

The padlock keypad flashes white and LED indicator flashes red when I activate the keypad.

- Security Lockout is triggered on the Padlock 2E.
- Please refer to page 20.

I tried to use USB-C to jumpstart the lock but unable to.

- Please ensure USB-C connector is connected to the USB-C slot securely while unlocking it with PIN code or Bluetooth.
- Please unlock within 20 seconds.
- Please ensure that the Power Bank has sufficient power.

The lock is not responding at all.

- The Padlock 2E's battery is flat.
- Use the USB C cable to jumpstart the lock and unlock it.
- Charge the lock to continue using it. Please ensure that the lock is fully charged before your next deployment.

I closed the shackle but the padlock did not relock automatically.

- Make sure Auto Lock is ON via the iglooworks mobile app.
- If Auto Lock is ON and the padlock is still not working, try to lock the padlock manually by holding the UNLOCK button for 2 seconds.

I tried to unlock the Padlock 2E but the keypad went off and came back on with 2 slow and 2 quick beeps.

- The Padlock 2E is low in battery.
- Use an USB-A to USB-C cable connected to a power bank to jumpstart the lock and unlock the Padlock 2E to replace the batteries.
- Refer to page 9 for steps on battery replacement and page 13 for charging of battery.

Troubleshoot

Software Troubleshooting:

Why do I get logged out automatically?

All accounts are logged out automatically after 1 hour for security reasons.

Why are my activities not updated on the dashboard?

As the locks are offline, they need to be synced via app for access logs to be retrieved and sent to the dashboard.

Can a property be in multiple departments?

Yes, but the access created for locks in each department will not be shared across departments. However, lock activity will be shared across departments.

Can a lock be in multiple properties?

Yes, but the new property needs to be in the same timezone as the current property.

Why can't I delete my property?

A property cannot be deleted if locks are assigned to it; they need to be reassociated to another property first.

Can an owner/admin be a manager of a department?

Yes, owners and admins are not managers by default, so they need to be added to the department.

I made a mistake while creating a team member/lock user, how can I edit it?

Edits are not supported for this release, but you can delete and invite the person again.

What is my organisation ID?

The organisation ID is provided to the owner when they sign up. All users invited to this account will need to use this organisation ID when signing in.

What happens if I delete department?

All created Bluetooth access will cease to work. However, PINs will still work on the lock. Activities can still be seen if the property the lock belongs to is in another department.

I received an error 409: Duplicate email.

This error will appear if:
1. The user was added and deleted, please contact support@igloohome.co to reinstate the user (this will be fixed in a future release).
2. The user was added as a lock user first within a department, the owner/admin will not be able to add them to Team.

Why can't I see the lock access and activities?

Lock access and activities can only be viewed in the department view by a manager. If you are viewing the dashboard as an owner or admin, you will not be able to see this. It is possible for an admin or owner to add themselves into a department to see lock access and activities.

FCC Compliance

This device complies with part 15 of the FCC Rules. Operation is subject to the following two conditions: (1) this device may not cause harmful interference, and (2) this device must accept any interference received, including interference that may cause undesired operation.

NOTE: This equipment has been tested and found to comply with the limits for a Class B digital device, pursuant to Part 15 of the FCC Rules. These limits are designed to provide reasonable protection against harmful interference in a residential installation. This equipment generates, uses and can radiate radio frequency energy and, if not installed and used in accordance with the instructions, may cause harmful interference to radio communications. However, there is no guarantee that interference will not occur in a particular installation.

If this equipment does cause harmful interference to radio or television reception, which can be determined by turning the equipment off and on, the user is encouraged to try to correct the interference by one or more of the following measures:

- Reorient or relocate the receiving antenna.
- Increase the separation between the equipment and receiver.
- Connect the equipment into an outlet on a circuit different from that to which the receiver is connected.
- Consult the dealer or an experienced radio/TV technician for help.

NOTE: The Grantee is not responsible for any changes or modifications not expressly approved by the party responsible for compliance. such modifications could void the user's authority to operate the equipment.

The device has been evaluated to meet general RF exposure requirement.
This equipment complies with FCC's RF radiation exposure limits set forth for an uncontrolled environment. This device and its antenna(s) must not be co-located or conjunction with any other antenna or transmitter.

IC Caution

RSS-Gen Issue 5 “&” RSS-Gen numéro 5

English :

This device contains licence-exempt transmitter(s)/receiver(s) that comply with Innovation, Science and Economic Development Canada’s licence-exempt RSS(s). Operation is subject to the following two conditions:

(1) This device may not cause interference.
(2) This device must accept any interference, including interference that may cause undesired operation of the device.

Any changes or modifications not expressly approved by the party responsible for compliance could void the user’s authority to operate the equipment.

French:

Cet appareil contient des émetteurs / récepteurs exemptés de licence conformes aux RSS (RSS) d’Innovation, Sciences et Développement économique Canada. Le fonctionnement est soumis aux deux conditions suivantes:

(1) Cet appareil ne doit pas causer d’interférences.
(2) Cet appareil doit accepter toutes les interférences, y compris celles susceptibles de provoquer un fonctionnement indésirable de l’appareil.

Tout changement ou modification non expressément approuvé par la partie responsable de la conformité pourrait annuler l’autorité de l’utilisateur à utiliser l’équipement.

For more support articles, go to:
iglooworks.co/support