# User Manual

Product Name: Smart Bike Trainer

Product Model: TY-DJS003

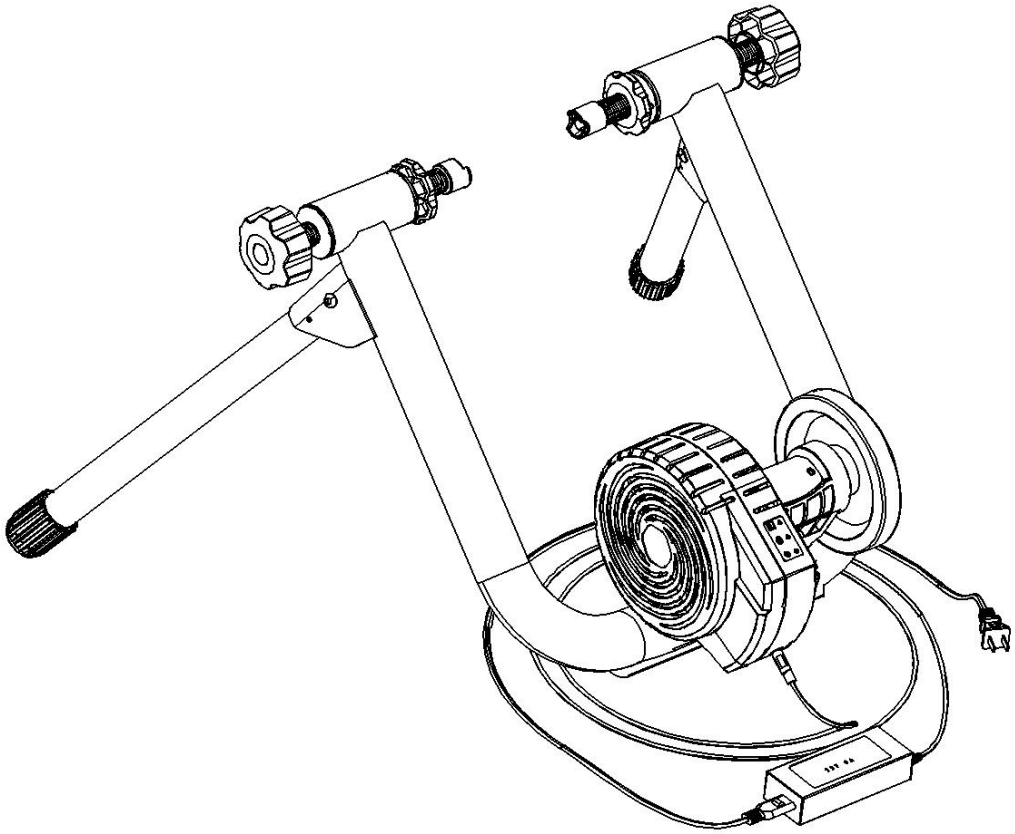

Jinhua Unisky Tools Co., Ltd

# Catalogue


- Important Safety Instructions
- FCC Statement
- Warning
- Disclaimer
- Spare Parts List
- Installation Instructions
- Grounding Instructions
- Smart Training
- Maintenance
- Common Fault and Eliminating Methods
- Product Specification Parameters

**Important Safety Instructions**

Read all instructions before using this appliance.
DANGER – To reduce the risk of electric shock:
1) Always unplug this appliance from the electrical outlet immediately after using and before cleaning.
WARNING – To reduce the risk of burns, fire, electric shock, or injury to persons:
1) An appliance should never be left unattended when plugged in. Unplug from outlet when not in use, and before putting on or taking off parts.
2) Do not operate under blanket or pillow. Excessive heating can occur and cause fire, electric shock, or injury to persons.
3) Close supervision is necessary when this appliance is used by, on, or near children, invalids, or disabled persons.
4) Use this appliance only for its intended use as described in this manual. Do not use attachments not recommended by the manufacturer.
5) Never operate this appliance if it has a damaged cord or plug, if it is not working properly, if it has been dropped or damaged, or dropped into water. Return the appliance to a service center for examination and repair.
6) Do not carry this appliance by supply cord or use cord as a handle.
7) Keep the cord away from heated surfaces.
8) Never operate the appliance with the air openings blocked. Keep the air openings free of lint, hair, and the like.
9) Never drop or insert any object into any opening.
10) Do not use outdoors.
11) Do not operate where aerosol (spray) products are being used or where oxygen is being administered.
12) To disconnect, turn all controls to the off position, then remove plug from outlet.
13) Connect this appliance to a properly grounded outlet only. See Grounding Instructions.
14) This appliance is not intended for use by persons with reduced physical, sensory or mental capabilities, or lack of experience and knowledge, unless they have been given supervision or instruction concerning use of the appliance by a person responsible for their safety. Keep children under the age of 13 away from this machine.

**FCC Statement**

This equipment has been tested and found to comply with the limits for a Class B digital device, pursuant to Part 15 of the FCC Rules. These limits are designed to provide reasonable protection against harmful interference in a residential installation. This equipment generates uses and can radiate radio frequency energy and, if not installed and used in accordance with the
instructions, may cause harmful interference to radio communications. However, there is no guarantee that interference will not occur in a particular installation. If this equipment does cause harmful interference to radio or television reception, which can be determined by turning the equipment off and on, the user is encouraged to try to correct the interference by one or more of the following measures:
-- Reorient or relocate the receiving antenna.
-- Increase the separation between the equipment and receiver.
-- Connect the equipment into an outlet on a circuit different from that to which the receiver is connected.
-- Consult the dealer or an experienced radio/TV technician for help

Please take attention that changes or modification not expressly approved by the party responsible for compliance could void the user's authority to operate the equipment.

This device complies with part 15 of the FCC rules. Operation is subject to the following two conditions
(1)this device may not cause harmful interference, and
(2) this device must accept any interference received, including interference that may cause undesired operation.

This equipment complies with FCC radiation exposure limits set forth for an uncontrolled environment. This equipment should be installed and operated with minimum distance 50mm between the radiator & your body.

# Warning

Thank you for purchasing UNISKY Smart Bike Trainer. Please read the User Manual carefully, especially the safety instructions, prior to initial use, and only use the indoor bike trainer as described in this User Manual. Non-compliance with the instructions may result in serious injury. The User Manual is an integral component of the indoor bike trainer. Please keep the User Manual in a safe place for future reference. Should you pass the indoor bike trainer on to another user, please be sure to include the User Manual.

●Please replace and use our special quick release for the rear wheel of the bike before use, and carefully check whether all parts in the package are complete.

● Before use, please confirm that the product has been placed on firm ground, and the four-foot pads on the feet touch the ground at the same time, to ensure that the product is stable and does not shake.

● Before starting the training, please make sure you are in good health. It is recommended that you consult your doctor to know whether you can do Cycling.

● If you feel unwell during use (such as physical tiredness, weakness, pain, chest tightness, discomfort, or abnormal pulse beat), please stop using immediately and take a rest. If you continue to feel unwell, you are recommended to see a doctor immediately.

● Without supervision or guidance, people with physical, sensory, or mental disabilities (including children) or who lack relevant experience or knowledge shall not use this product.

● Do not allow children to use this product as a toy without supervision to avoid danger or injury.

● Please pay attention to whether your clothes are too long, to avoid clothes or accessories on clothes affecting cycling and avoid danger.

● When using this product, please keep enough space around to ensure that there are no obstacles, children, pets or any potentially dangerous articles (furniture, tables, and chairs, etc.) around, to avoid accidents due to inadvertent contact with the moving parts on the bike and bike trainer.

● Please be careful when using this product while standing up. Do not stand and shake the bike to avoid falling or damaging the bike.

● Please do not disassemble or convert this product by yourself.

● Please use the original spare parts. If there is any problem with this product, please contact the authorized dealer of UNISKY.

## Disclaimer

○ UNISKY shall not be responsible for the failure of software /application/equipment of the third party manufacturer, and shall not be liable for any damage to the bike trainer caused by software not developed or recommended by UNISKY.

○ The user must carefully read this instruction before using the product, completely follow the installation steps, installation methods, and inspection requirements of this instruction to install and inspect the product and use the product in accordance with the warning requirements. If the product is used in violation of the warning, resulting in temporary or permanent damage to the user's body (whether direct or indirect), or property damage, UNISKY shall not be liable.

**Reminder:**

- If you are uncertain as to whether the rear wheel axle of your bike can be securely clamped in place in the quick clamp device of the indoor bike trainer, please make sure in any case to assemble the rear wheel axle with the clamping lever that comes supplied, or consult the bike shop nearby
- If you fail to master the correct operation of bike installation on the bike trainer, please consult the professional bike maintenance personnel nearby or directly contact the UNISKY Dealer;
- Before riding, please make sure that your bike has been installed properly, or it will fall off from the bike trainer due to the unstable fixation between the bike and the bike trainer, resulting in accidental injury and property loss;
- Ensure that the bike trainer is placed flat to avoid accidental injury caused by shaking during riding;
- Before getting on the bike, it is necessary to check the air pressure of the tire. The air pressure while riding shall be in accordance with the value indicated on the tire;
- Whether it's a road bike or mountain bike, it's strongly recommended to use slicks for riding training, especially for mountain bikes. Mountain bikes are with bulky tire patterns, which will cause serious tire noise during riding training.

## Spare Parts List

| Parts No. | Name | Qty. | Picture |
|---|---|---|---|
| A | Bike Trainer Stand | 1 | 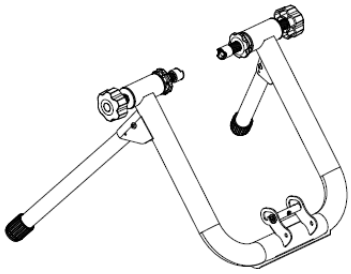 |
| B | Power Adaptor 12V-5A | 1 | 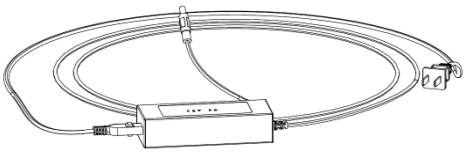 |
| C | Electromagnetic Coil Damper | 1 | 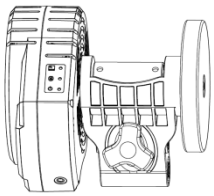 |
| D | Hexagon Bolt M8*95 | 1 | 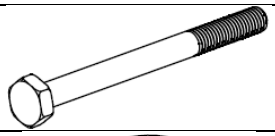 |
| E | Lock Nut M8 | 1 | 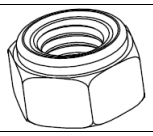 |
| F | Flat Washer φ8 | 2 | |
| G | ANT+ Receiver | 1 | 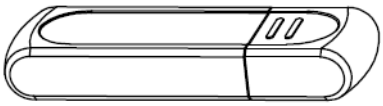 |
| H | Front Wheel Fixing Seat | 1 | 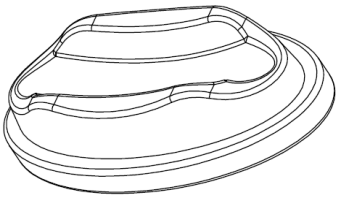 |
| I | Quick Release | 1 | 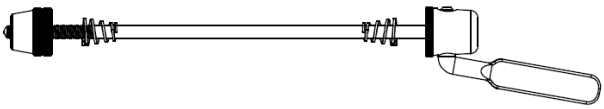 |
| J | L-Type Socket Spanner | 2 | 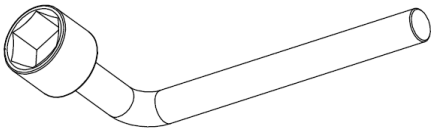 |

| | | | |
|---|---|---|---|
| K | USB extension cable | 1 | 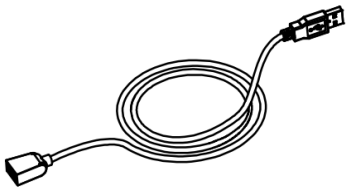 |

**Note for Optional Accessories:**

*This bike trainer can match with the thru-axle bike rear wheel by installing the thru-axle adapters. This accessory is **NOT** included in the package, please select and purchase the thru-axle adapter separately on the UNISKY online store.

## Grounding Instructions

This product is for use on a nominal 120-V circuit, and has a grounding plug that looks like the plug illustrated in sketch A in the figure below. A temporary adapter that looks like the adapter illustrated in sketches B and C may be used to connect this plug to a 2-pole receptacle as shown in sketch B if a properly grounded outlet is not available. The temporary adapter should be used only until a properly grounded outlet (sketch A) can be installed by a qualified electrician. The green colored rigid ear, lug, or the like extending from the adapter must be connected to a permanent ground such as a properly grounded outlet box cover. Whenever the adapter is used, it must be held in place by a metal screw.

**Grounding methods**

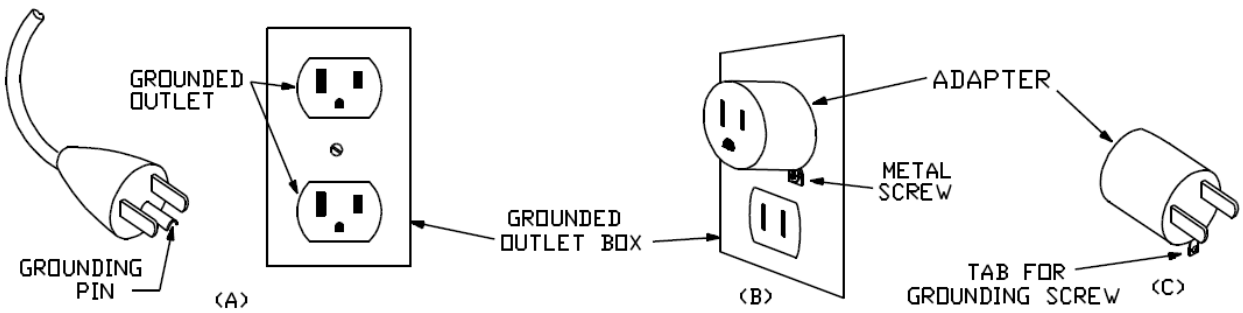

# Installation Instructions

**Note for Optional Accessories:**

*This bike trainer can match with the thru-axle bike rear wheel by installing the thru-axle adapters. This accessory is **NOT** included in the package, please select and purchase the thru-axle adapter separately on the UNISKY online store.

**Step 1. Bike Confirmation**

Before using the bike trainer, please confirm the specification of the bike that you want to use. This product is suitable for 26", 28', 700C and 29" mountain bikes and road bikes.

**Step 2. Assembly of the Bike Trainer**

2-1 Open the box and check all the parts and quantity according to the spare parts list.

2-2 Put up the frame.

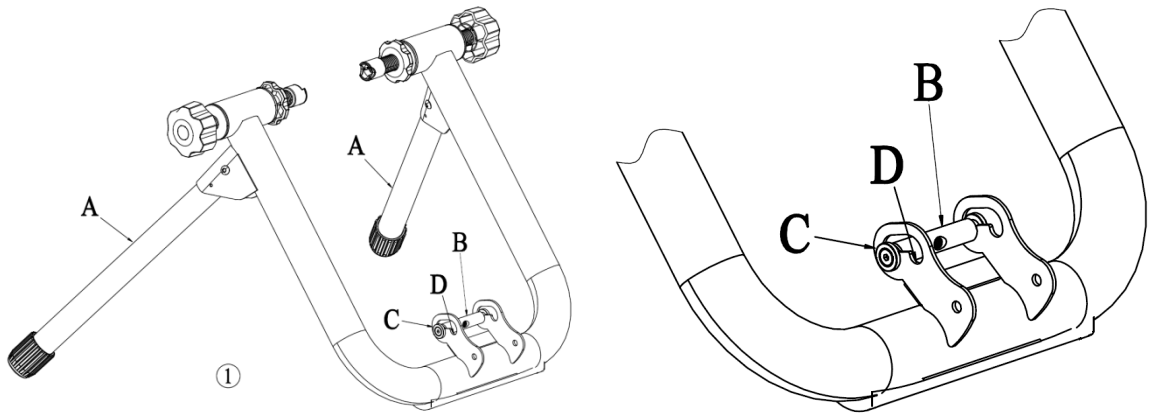


1）As shown in figure 1, put up the two pipes A of the bike trainer to the maximum position, place them on the working surface, and ensure that the movable pin of B cylinder slides into slot C.

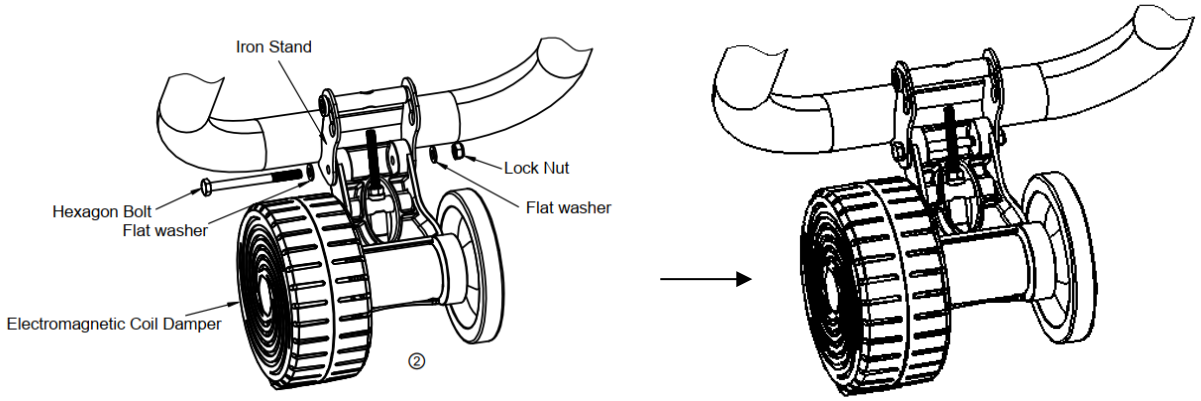


2）As shown in the figure above, align the round hole on the electromagnetic coil damper with the round hole on the iron stand, put a flat washer on the hexagon bolt, and then pass the bolt through the round holes on the iron stand and the damper at the same time to make it fixed in series, finally put on the flat washer, and tighten the lock nut with the L-type socket spanner.

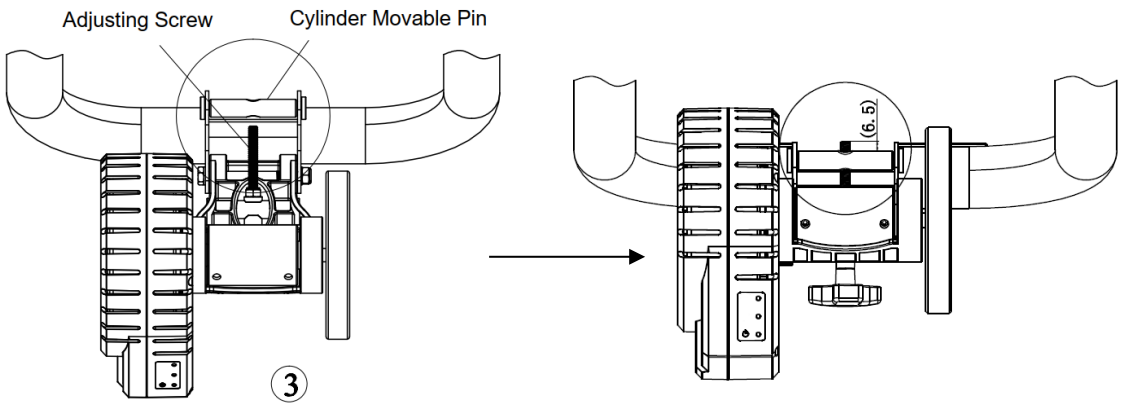


3）As shown in Figure 3 above, hold the damper with the left hand and lift it slowly. Adjust the position of the screw hole of the cylindrical movable pin with the right hand, and then align the mouth of the adjusting screw with the screw hole of the cylindrical movable pin. Slightly lift the left hand to make the mouth of the adjusting screw completely align with the screw hole. Then screw the adjusting screw with the right hand clockwise, and the screw thread goes more than 5mm out of the cylindrical movable pin.

**Note: In this process, the left hand shall always lift the damper upward with a little force to prevent the damper from falling and hurting the hand!**

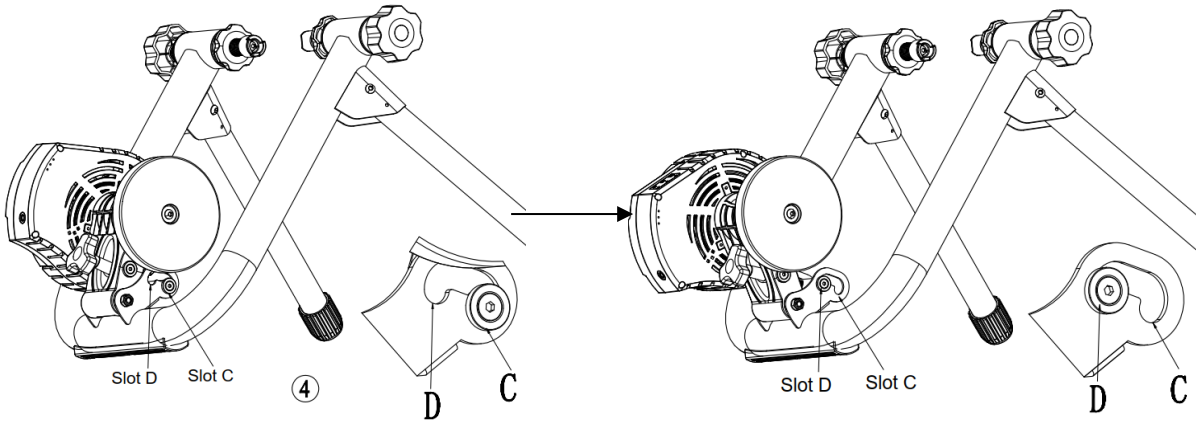


4）As shown in Figure 4 above, the next step is to slide the cylindrical movable pin to drive the whole damper slide from the slot C on the iron stand to the slot D, so that it can be adjusted during riding training.

**Note: during operation, hold the damper with one hand gently, and hold the cylindrical movable pin with the other hand to slide it from slot C to slot D. Pay attention to prevent hand injury during sliding!**

**Step 3. Bike Installation and Debugging**

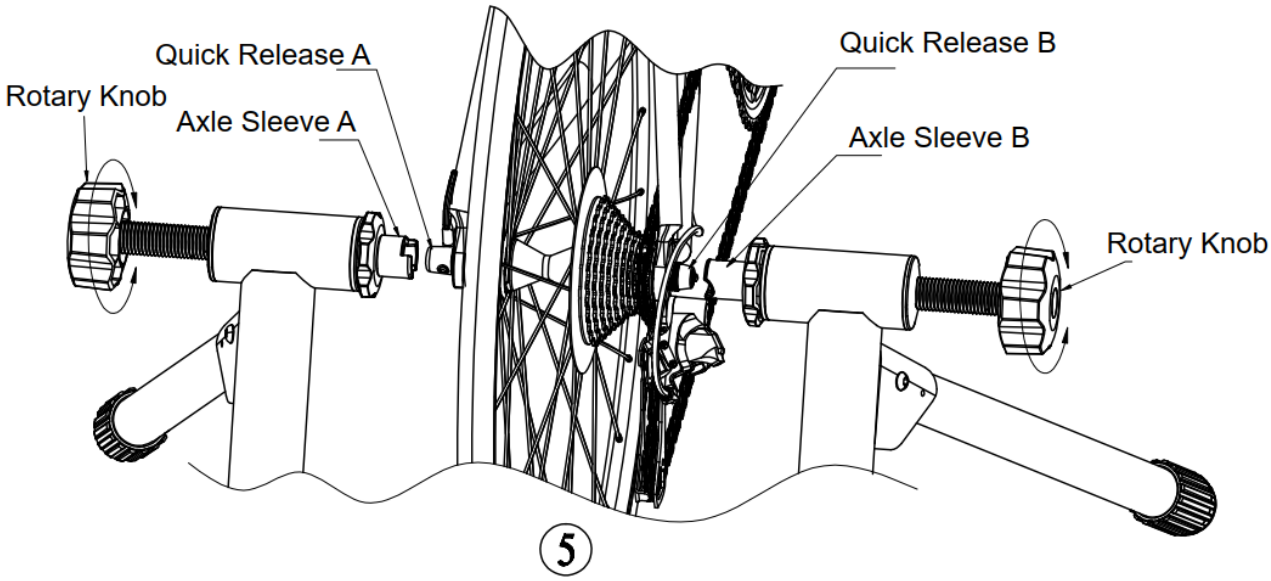


1）Place the bike trainer on stable ground, and adjust the rotary knobs on both sides of the bike trainer so that the distance between the axle sleeve A and the axle sleeve B is greater than the length of the bike quick release, as shown in Figure 5.

2）Replace the original quick release of the rear wheel of the bike into the standard quick release, as shown in Figure 5. Lift the bike with a single hand to a certain height. First, embed the B end of the quick release into the B hole of the axle sleeve. Straighten the bike and adjust the knobs on the sides of the bike, insert the A end of the quick release into the A-hole of the axle sleeve and tighten the knob.

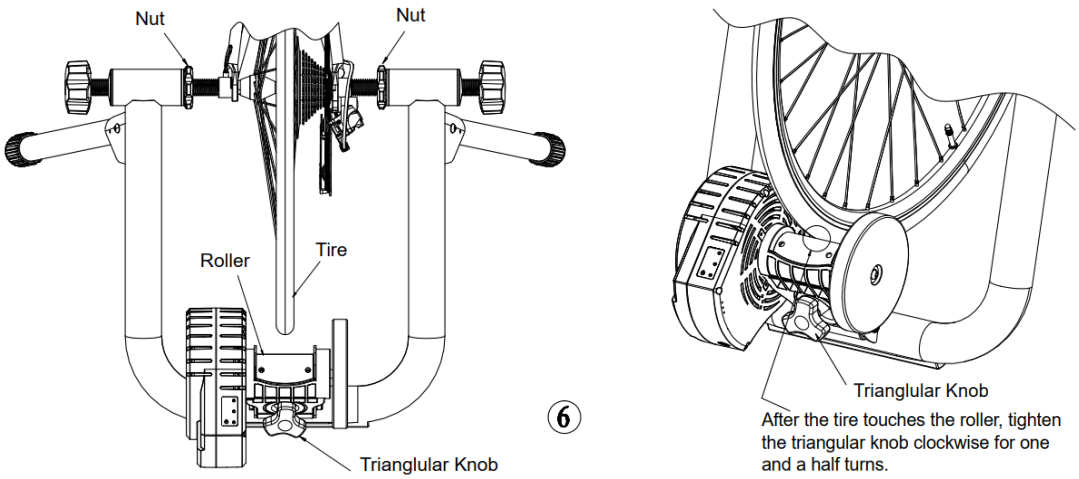


3）Adjust the knobs on both sides to make the bike tire roughly in the middle of the roller, as shown in Fig. 6. The knobs on both sides should be tightened to prevent the bike from shaking easily, and then lock the two nuts on the screw rods on both sides for fixing.

4）Adjust the triangular knob clockwise to make the tire just touch the bicycle, and then tighten the triangle knob for a circle and a half turns to make the roller press into the tire tightly.

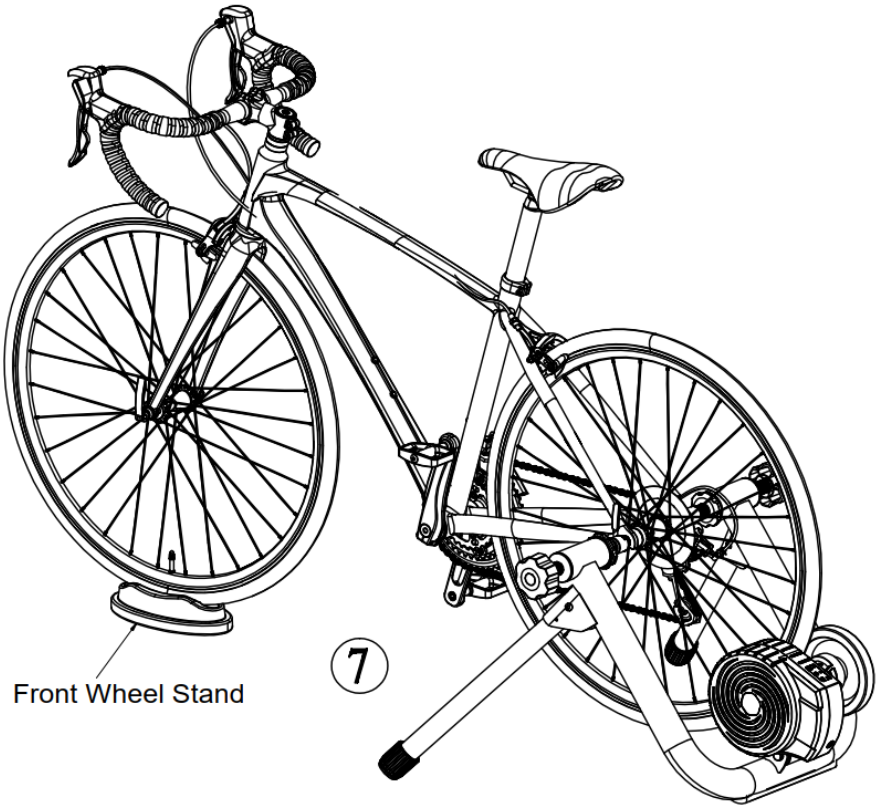


5）As shown in Figure 7, the standard front-wheel stand is fixed under the front wheel of the bike to reduce the left and right wing of the front wheel and improve the comfort while riding.

## Smart Training

1）Calibration

The mechanical energy loss on the transmission link of bike trainers, tires, and stands will cause by the bicycle installation's frequency or the compression force produced when adjusting the tire and the tire friction. It will affect the power accuracy. Therefore, we advise you to make Spin-down calibration after installation to ensure better power accuracy.

Search and download the **Onelap Utility** on the Google Play or App Store, or scan the QR code above to download it. Make sure the Bluetooth is on and the bike trainer disconnect from other apps. Find and connect the bike trainer on the **Onelap Utility**, and start the calibration process after reading the instructions carefully. Note: We advise you to warm up and ride on the bike trainer for 10 minutes for the best calibration result.

2）Bike Trainer Pairing

This bike trainer needs to be connected with external power supply before it can be used (When using PC, you need to plug the ANT+ receiver into the USB port of the computer).

1. Take out the power adapter in the packing box, connect the DC plug to the bike trainer first, and then connect the power supply. When the power is connected, the power signal indicator on the damper is always on, and the ANT + signal indicator and Bluetooth signal indicator are flashing.
2. After pairing with the third-party riding software of the computer, the ANT + signal indicator is always on, and the FE-C protocol is supported when using. After the Bluetooth signal is linked with the app of mobile phone or tablet, the BLE signal indicator is always on.

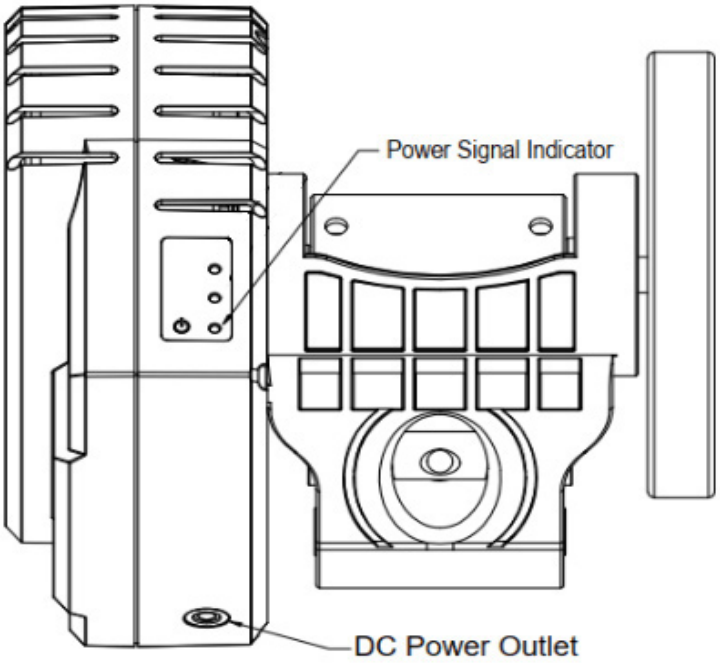


Meanwhile, you can use the app of mobile phone or tablet to operate the power training and other activities. This product can also match with ANT + riding stopwatch for use. The specific operation methods of pairing and setting shall be according to the operation instructions of each brand.

**Tip: when pairing, if you cannot detect the bike trainer device immediately, use the USB data extension cable(Part K). First, insert one end of the extension cable into the USB port on the computer, then insert the other end into ANT+ receiver and place it near the bike trainer to detect the bike trainer device.**

3）Gaming platform

This product supports pairing with the following third-party cycling software:
Onelap(Recommended), zwift, strava,etc.

To training with Onelap, an emerging app containing diverse types of workouts that satisfy your different fitness demands with the immersive outdoor cycling experience, you will have 14 days or 100km riding free trail. As a special gift, we will present a 186-DAY premium passport for all of our new visitors. Check the redemption code on the Onelap flyer and scan the QR code to activate your account.

Download at:
Windows：www.onelap.com
Android：Google Play- Onelap
IOS：App Store- Onelap

## Maintenance

- The product can be folded for storage. Operation method: press down the two A pipes directly and tuck them in. Take care not to hurt your hands when folding and tucking.
- This product must be stored in a clean indoor environment that is dry, away from direct sunlight, fire, water, or other dangerous goods.
- Due to the circuit board structure inside the product, please only wipe the product with a clean cloth for cleaning. Do not use detergent, cleaning powder, or other chemical solvents to avoid personal and financial safety.

## Common Fault and Eliminating Methods

In case of abnormality, please inspect and solve it according to the following table:

| **Faults** | **Inspection and Solutions** |
|---|---|
| The bike trainer is wobbly and shaking | ● The ground is not flat. Please put it on the flat ground or yoga mat for riding training<br>● Check if both or one of the A tubes is fully open. |
| The bike trainer cannot be paired with the smart device | ● Check if the smart device is in the startup state<br>● Check the wireless communication connection: check if ANT+ is connected to your computer or tablet. If you use Bluetooth connection, please confirm that the Bluetooth function is turned on. |
| Excessive body vibration during use | ● Check if the exposed counterweight wheel shakes and if the knobs and nuts on both sides of the bike trainer are loose.<br>● Check whether the tire pressure of a bicycle is in normal condition. |

**Note:**

**If the fault still cannot be eliminated, please contact the authorized dealer of UNISKY for assistance. Do not disassemble the product by yourself, which will cause damage to the product and affect the after-sales service of the product.**