FENCHILIN

FCC Warning:
This equipment has been tested and found to comply with the limits for a Class B digital device, pursuant to part 15 of the FCC Rules. These limits are designed to provide reasonable protection against harmful interference in a residential installation. This equipment generates, uses and can radiate radio frequency energy and, if not installed and used in accordance with the instructions, may cause harmful interference to radio communications. However, there is no guarantee that interference will not occur in a particular installation. If this equipment does cause harmful interference to radio or television reception, which can be determined by turning the equipment off and on, the user is encouraged to try to correct the interference by one or more of the following measures:
o Reorient or relocate the receiving antenna.
o Increase the separation between the equipment and receiver.
o Connect the equipment into an outlet on a circuit different from that to which the receiver is connected.
o Consult the dealer or an experienced radio/TV technician for help.

Caution: Any changes or modifications to this device not explicitly approved by manufacturer could void your authority to operate this equipment.

This device complies with part 15 of the FCC Rules. Operation is subject to the following two conditions: (1) This device may not cause harmful interference, and (2) this device must accept any interference received, including interference that may cause undesired operation.

The device has been evaluated to meet general RF exposure requirement. The device can be used in portable exposure condition without restriction.

FENCHILIN

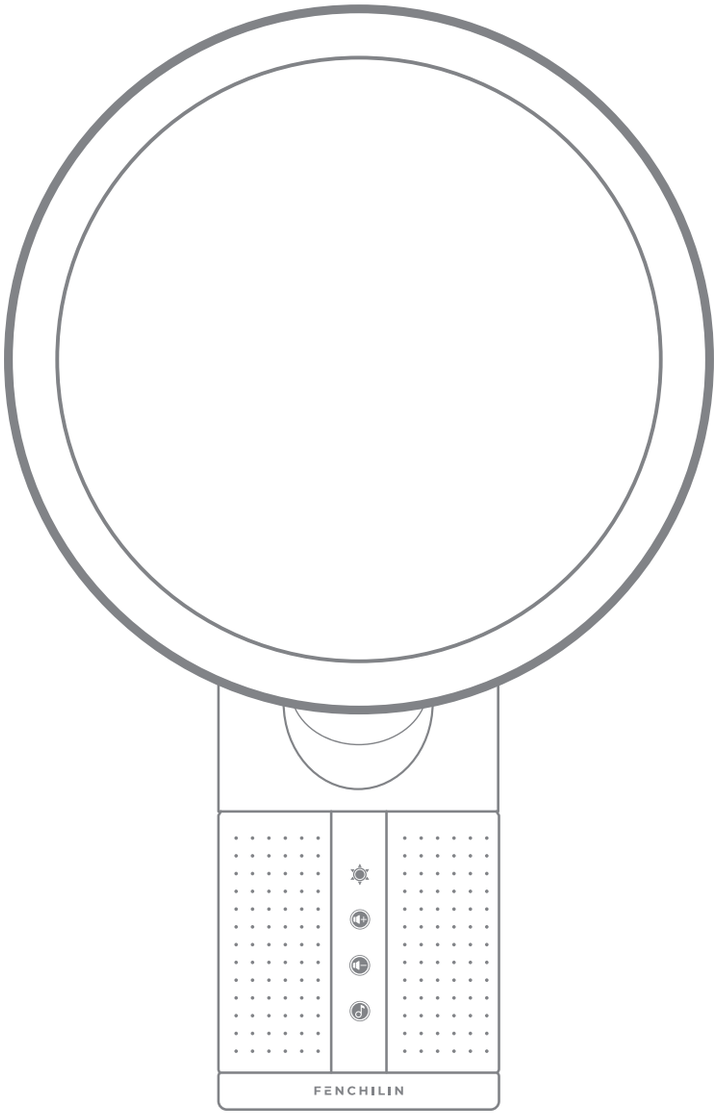

ECHO MIRROR
USER MANUAL

FEATURES

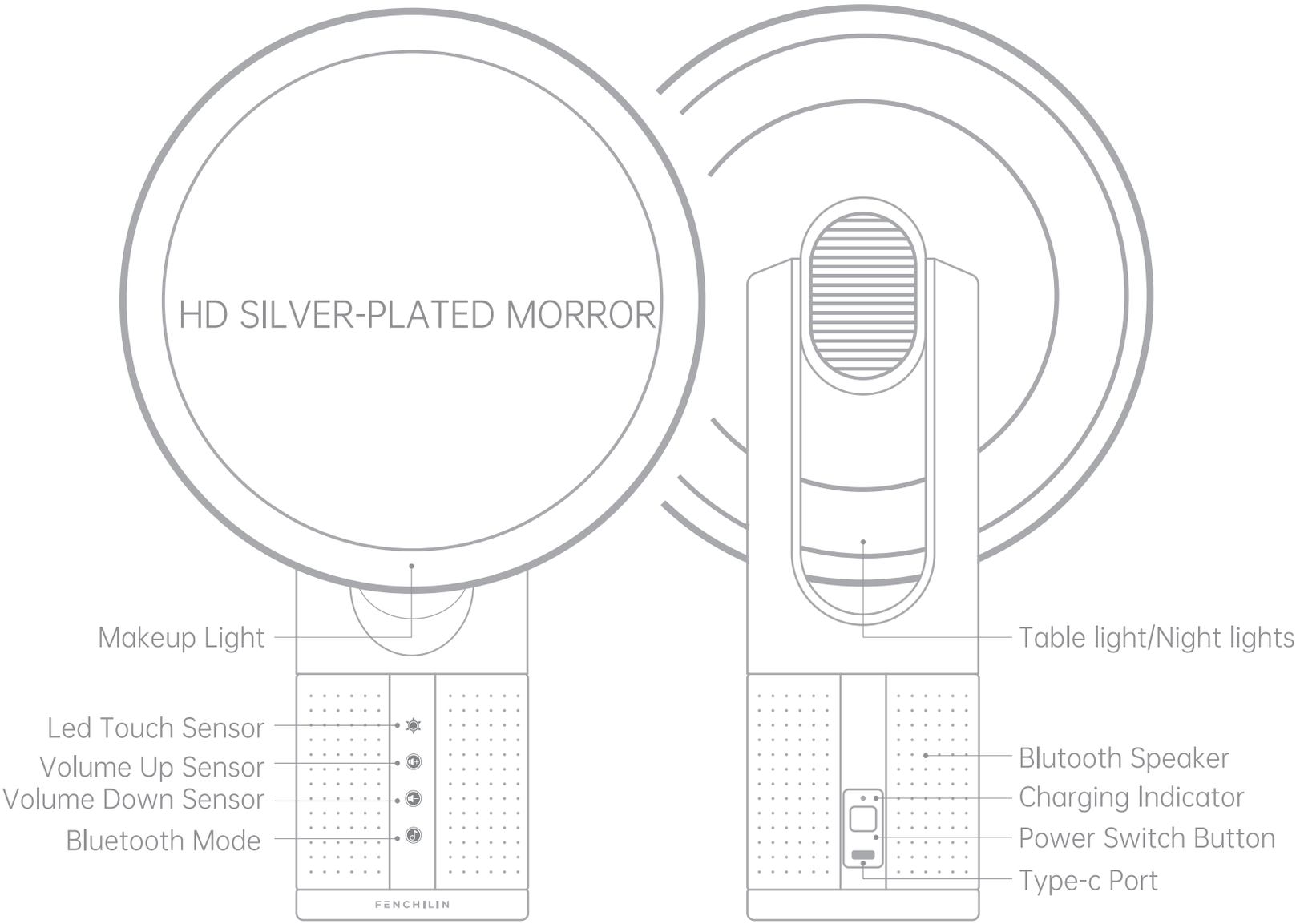
HD SILVER-PLATED MORROR
Makeup Light
Led Touch Sensor
Volume Up Sensor
Volume Down Sensor
Bluetooth Mode
FENCHILIN
Table light/Night lights
Blutooth Speaker
Charging Indicator
Power Switch Button
Type-c Port

THREE MODE

• The product can rotate the mirror to switch between Micron mode/Table lamp mode,press" ☼"to active led light,change the led light temperature and brightness adjustment.

• In different lighting modes, you can play songs via Bluetooth to enjoy the music.

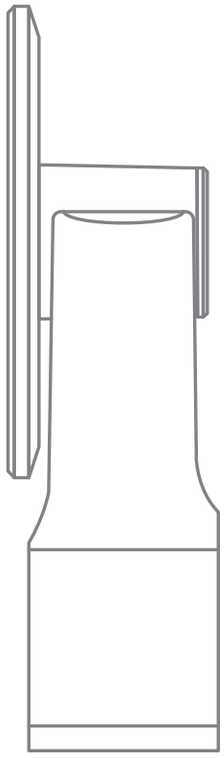

Makeup light mode

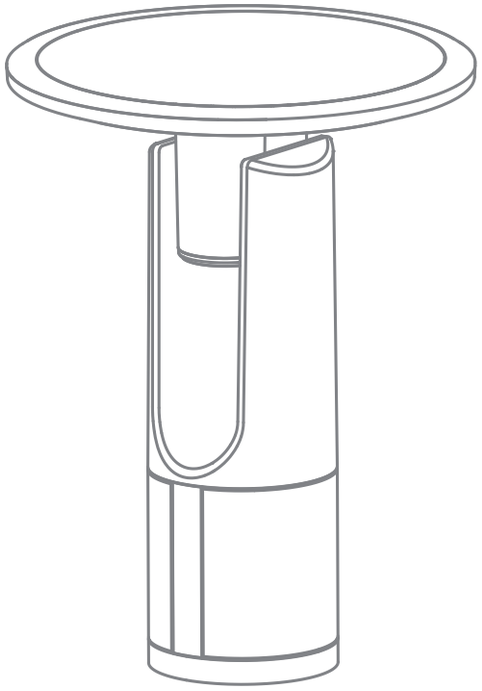

Night light mode

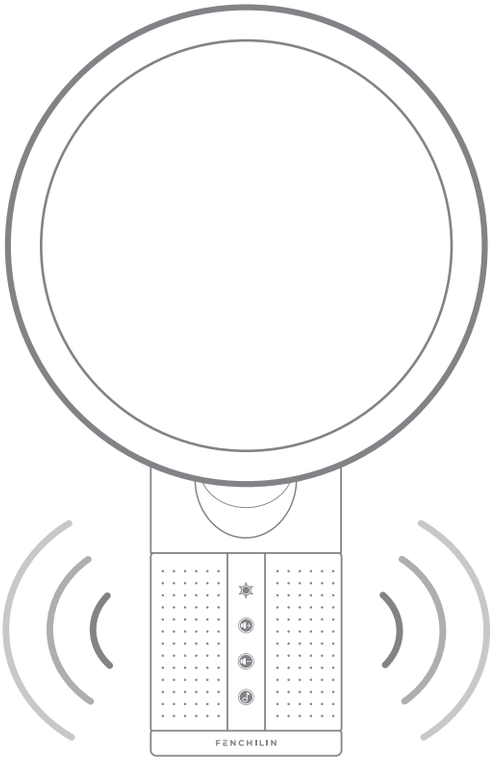

Music Mode

LIGHTING CONTROL

•After the power is turned on, touch " ☀ "bottom will display always on.

•When the light is off, short press the touch sensor to turn on the light.

•Short press the touch sensor successively to switch the led light color temperature and turn off the light state.

•In any light source mode, long press the touch sensor to adjust brightness

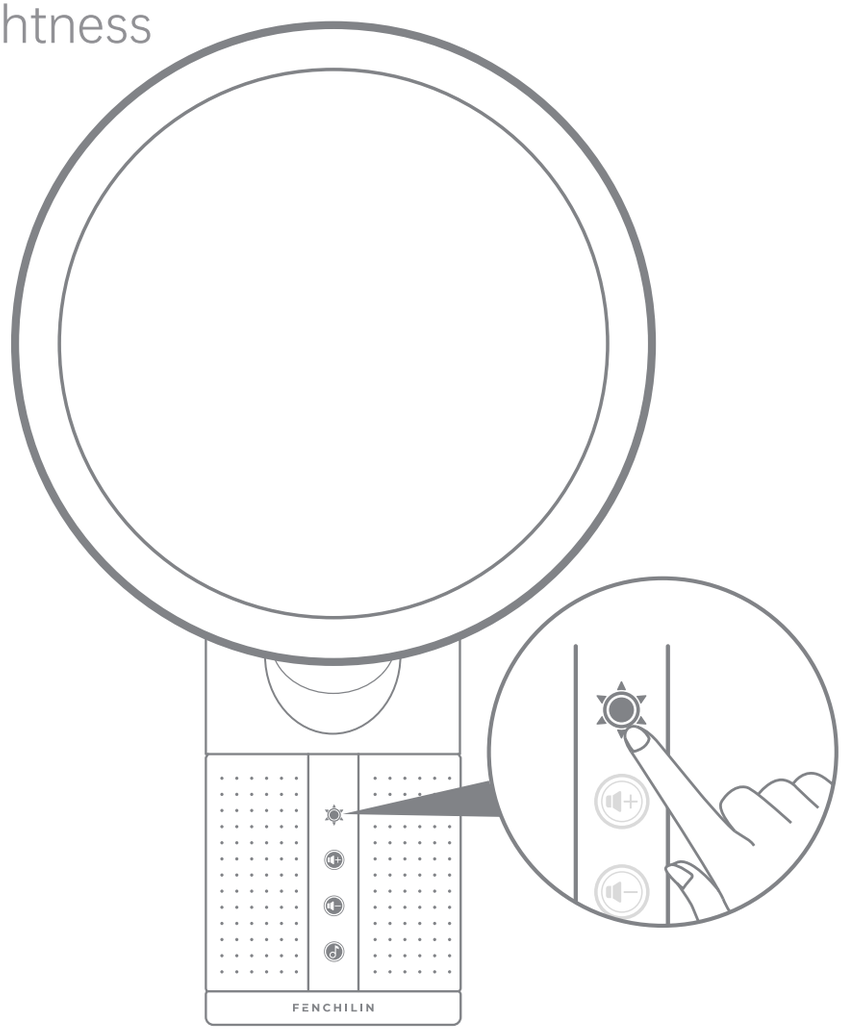

Cold light

Office lighting and commuting makeup.

Natural light

Daily lighting, daily makeup.

warm light

Warm light is suitable for dating occasions, more romantic

BLUETOOTH SPEAKER CONTROL

•After the power on, long press the touch sensor " " to turn on/off the Bluetooth speaker

•Bluetooth On ," " The indicator light flickers quickly as Bluetooth pairing

•Lights on always as Bluetooth pairing completed / Play ,Lights flickers slowly as Pause

•In playing status, short press the touch sensor to pause/play the music

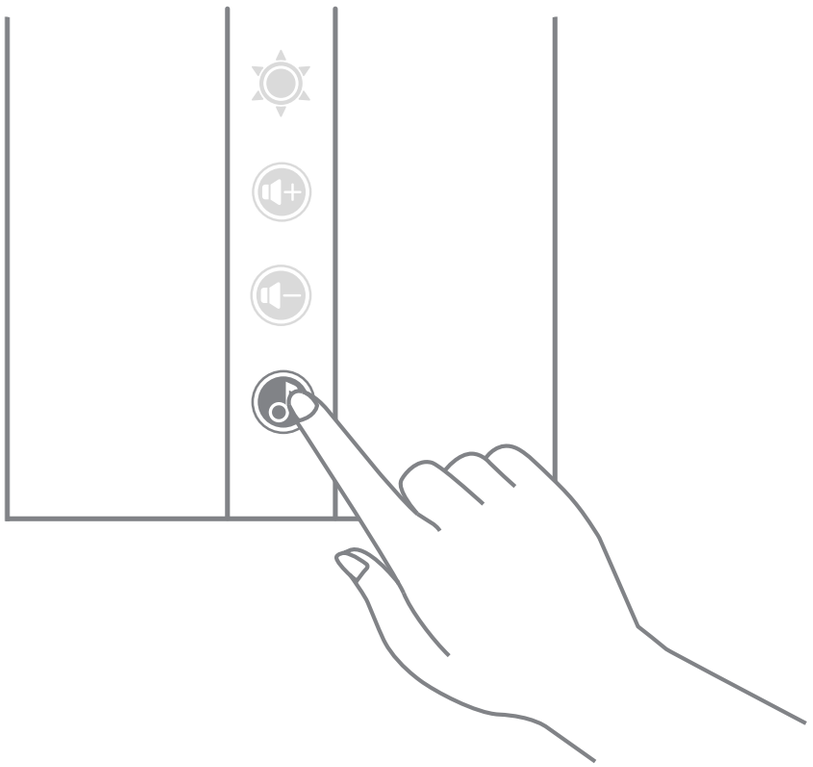

Automatically turn off the Bluetooth system after
waiting or without Bluetooth connection for more than 10 minutes

•After connecting to the Bluetooth speaker, short press the " ♫ " touch sensor twice to dial the nearest call number.

•When a call comes in, short press the touch sensor to answer, long press to reject it.

VOLUME/PLAY CONTROL

•While playing music or calling, long press the " " " " touch sensor to increase/decrease Volume, when Hear the beep as the limit

•Short press the " " touch sensor for the next song, short press the " " touch sensor for the previous song

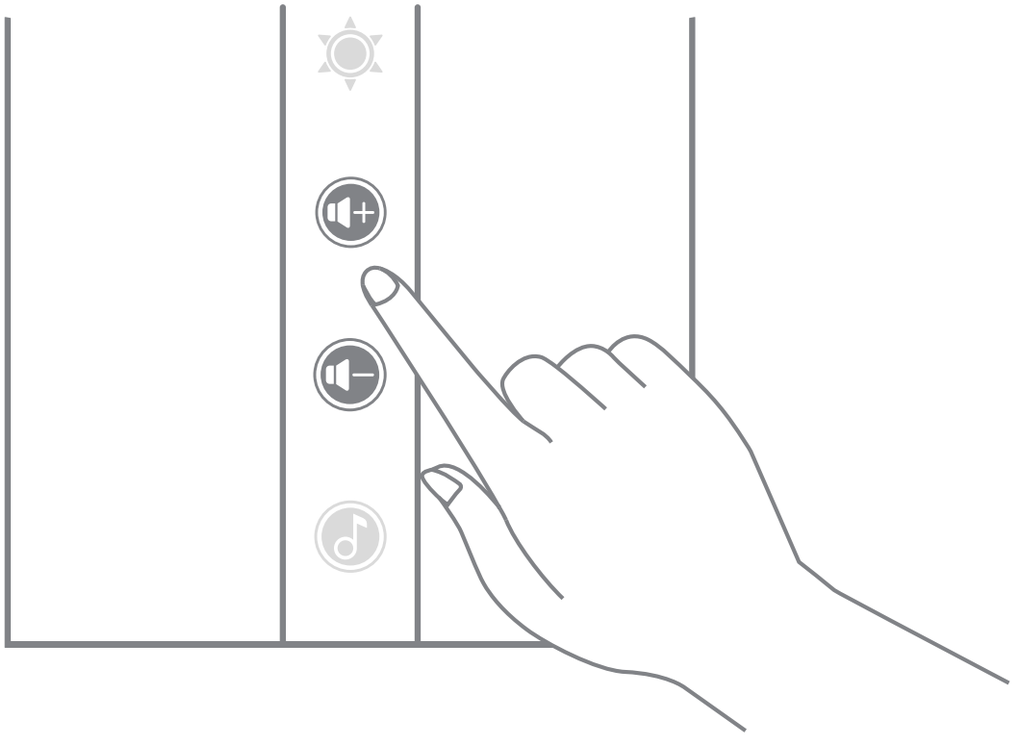

CHARGING INDICATOR

•The light flickers when charging, and stays on when fully charged, and the indicator flickers when the battery is too low

SWITCH SENSOR

•Long press to turn on or off, short press to turn on or off the light

TYPE-C CHARGING PORT

•Charging voltage DC5V±0.25V, charging current 2100mA

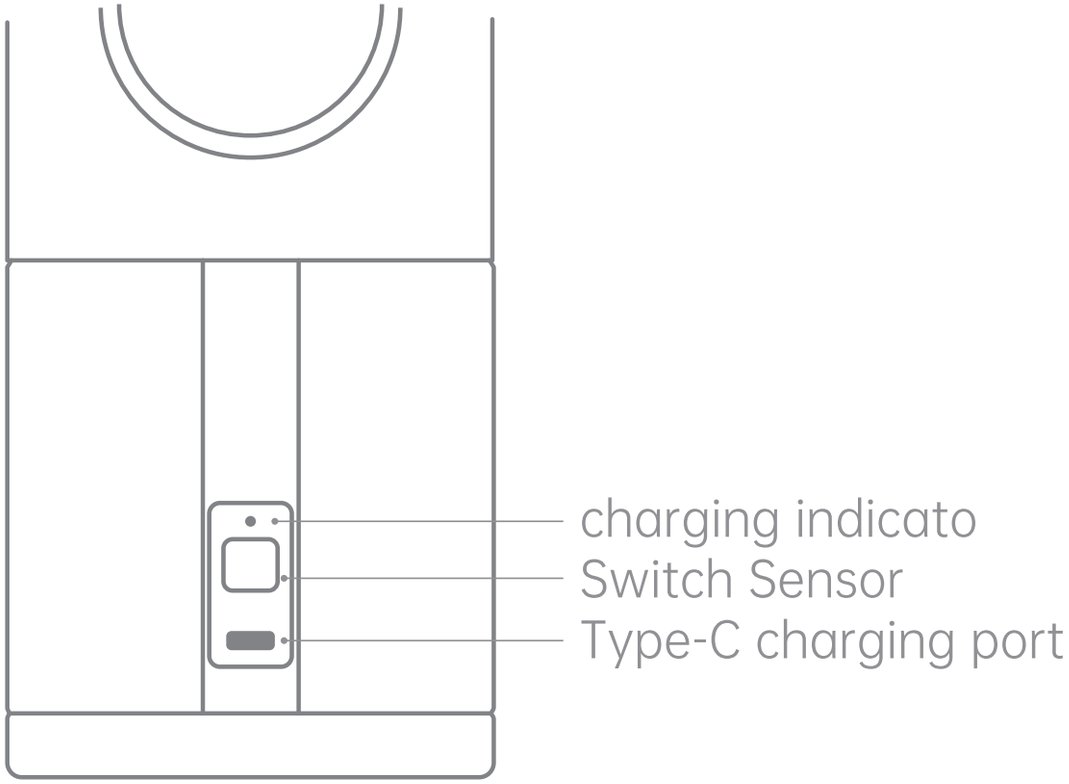

LOW BATTERY REMINDER

•When the battery is low, the brightness of the fill light/night light will flash alternately, and the " ☼ " indicator flashing,to remind users to charge in time

•When charging, the fill light/night light can use normally

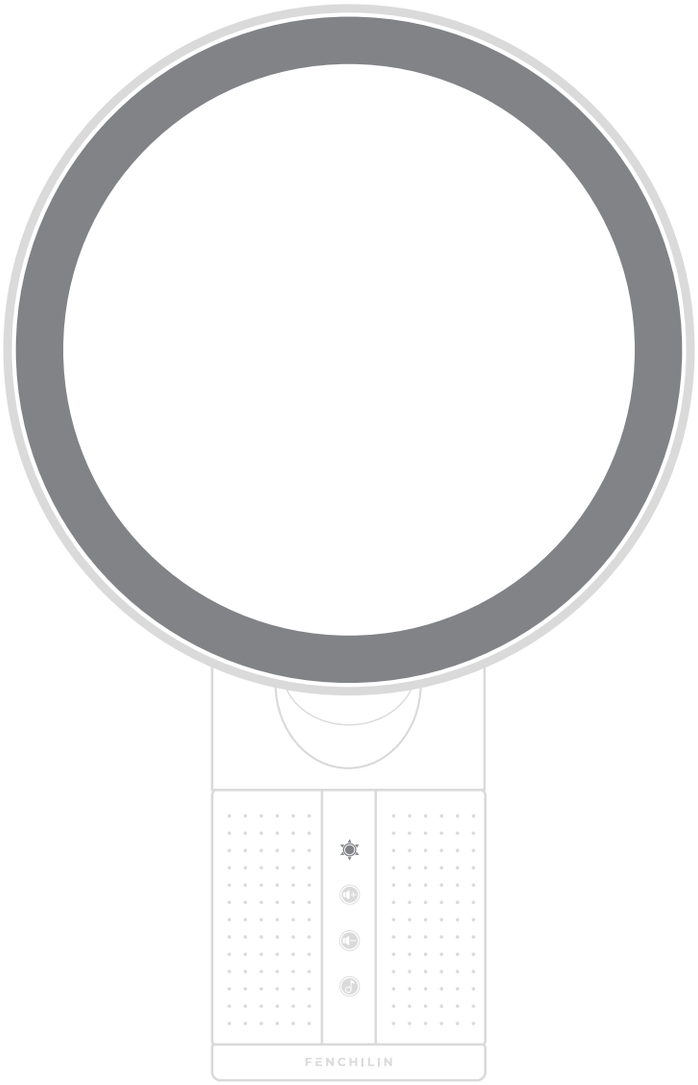

MAGNIFYING GLASS AREA

Designed for detailed inspection of pores and eyebrows When in use, it is attached to the position directly above the mirror,Other locations cannot be adsorbed.

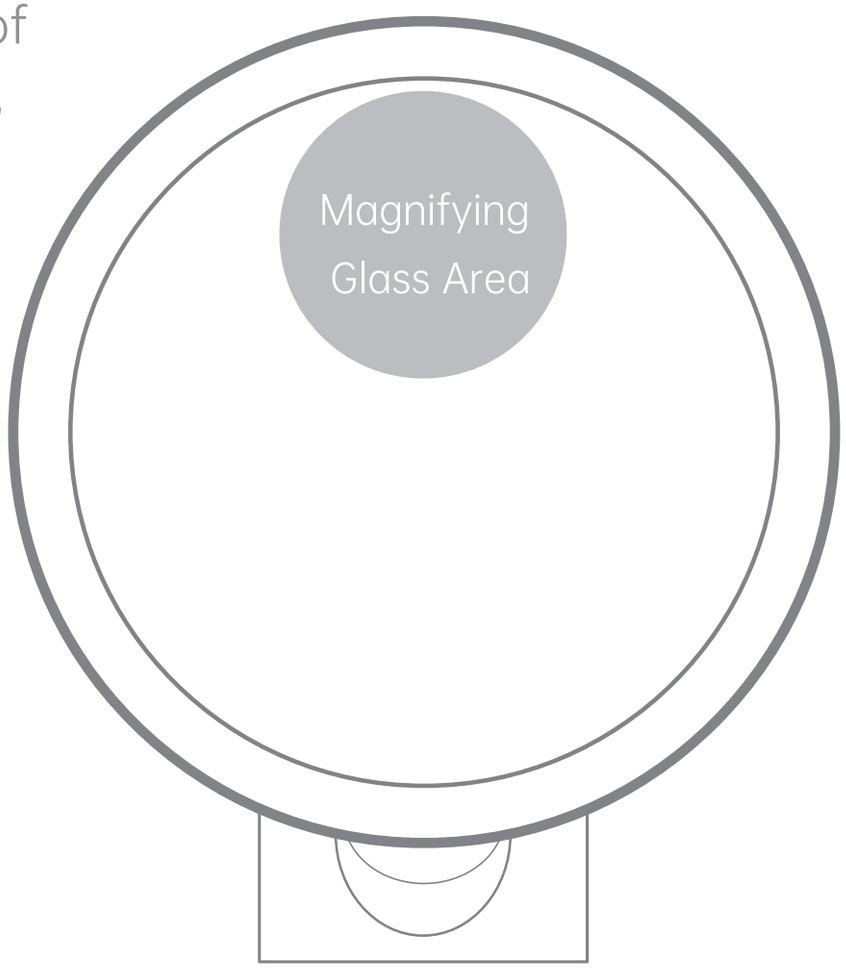

BASIC PARAMETERS

Name	FENCHILIN ECHO MIRROR	Model	MZMGJ0089
Size	372X235X105mm	Voltage Input	DC5V±0.25V

PRECAUTIONS (POWER PRECAUTIONS)

•Do not pinch or bend the charging cable excessively, otherwise the core may be exposed or broken

•Do not use inappropriate AC outlets

•This product has a built-in battery, users should not try to disassemble the product and replace it by themselves

SAFETY INSTRUCTIONS

•Do not place the product in a place where children or pets can easily reach, to prevent accidentally touching the mirror and dropping it Dangers such as product fragments and scratches.

•In the course of using the product, if there is any abnormality, please stop using it immediately.

•It is strictly forbidden to bring the product close to or throw into the fire source to avoid the danger of fire and explosion.

•Do not use in unstable places such as easy to tip over or fall.

WARNING Please don't use it in high temperature, humid and wet places such as bathroom. This product is not waterproof.