FENCHILIN

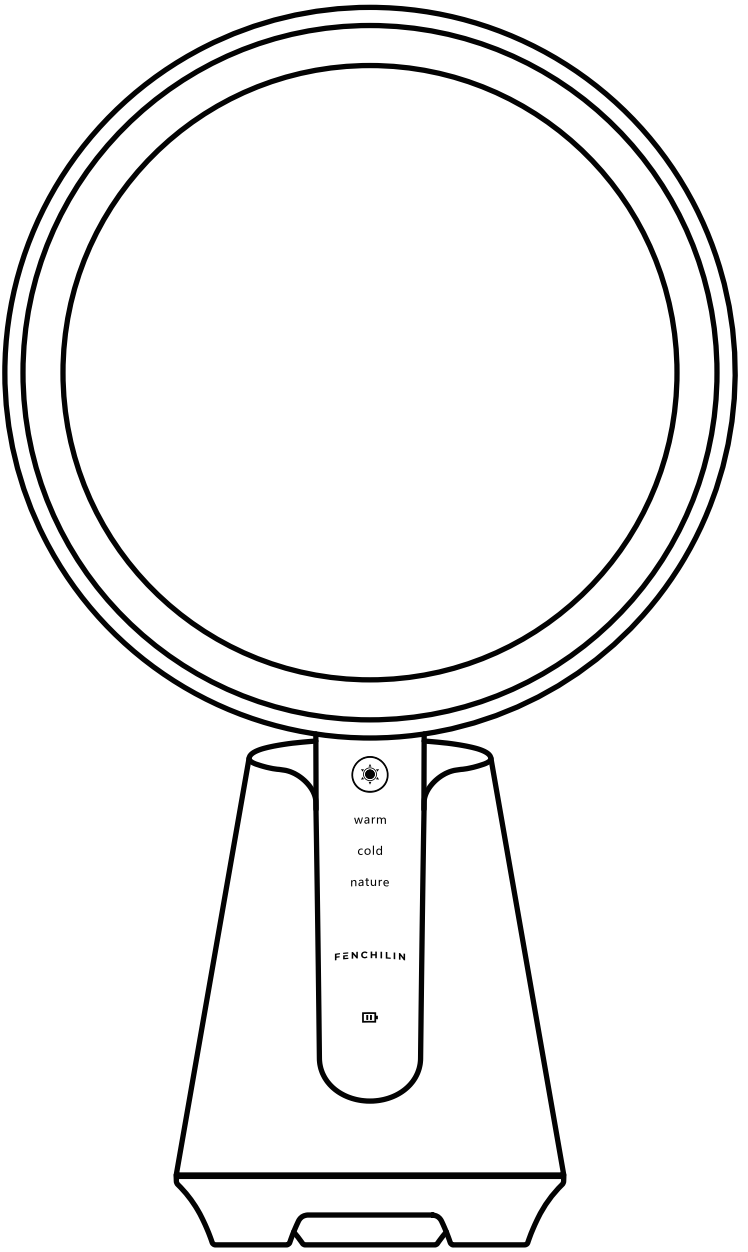

User Manual for Handheld Beauty Mirror

(Speaker Version)

Function Introduction

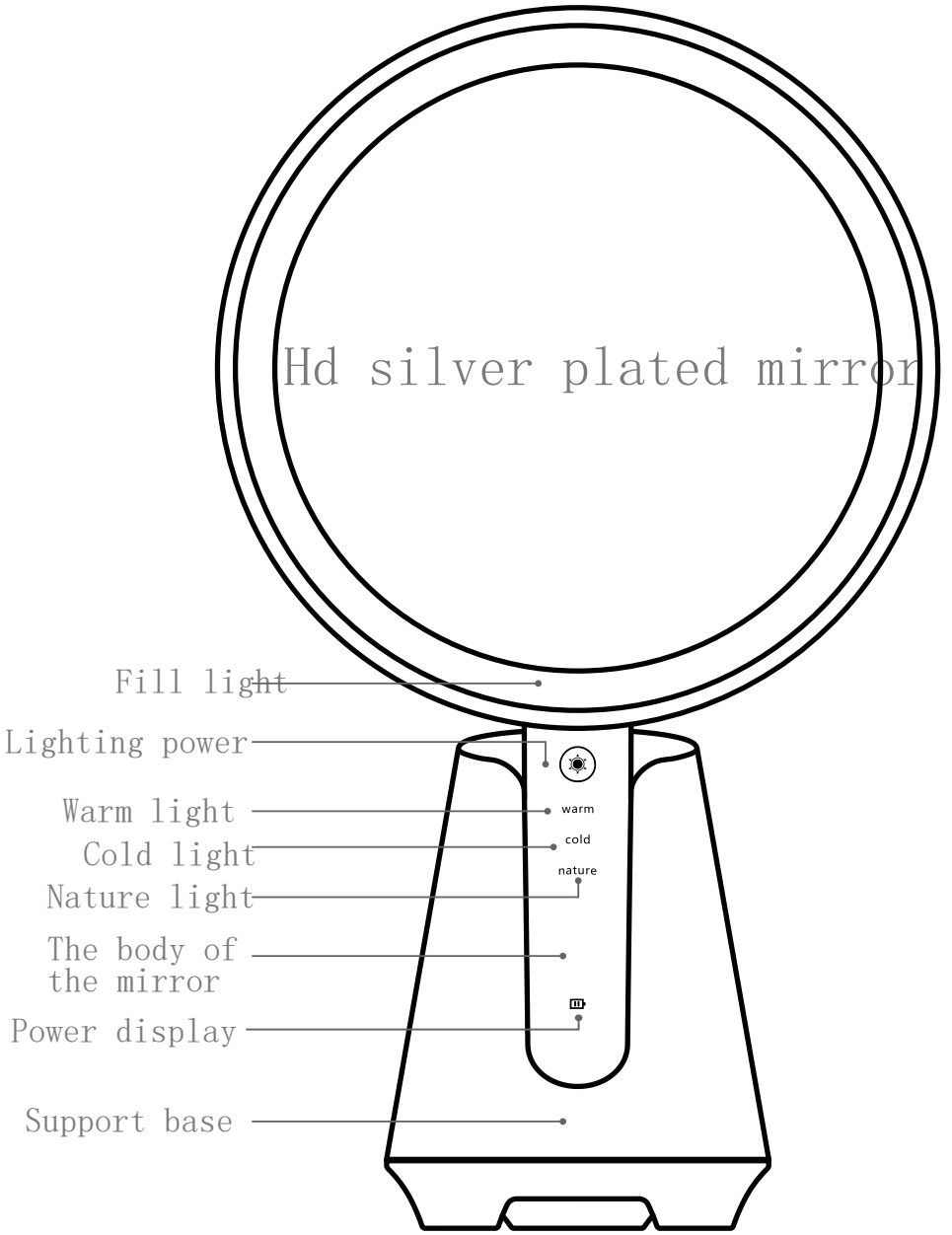

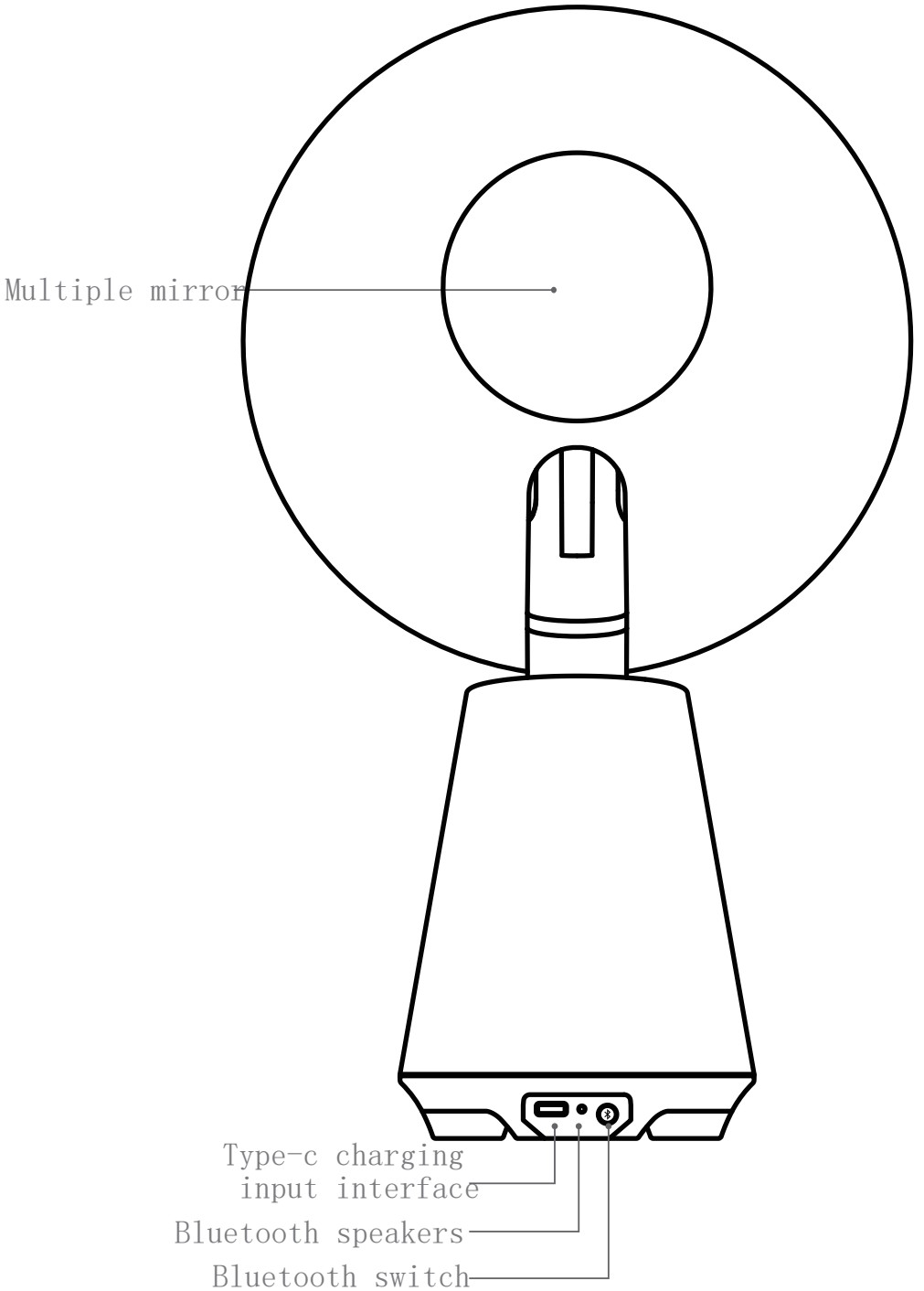
Multiple mirror
Type-c charging
input interface
Bluetooth speakers
Bluetooth switch

Handheld/vertical split

• The product can be pulled away from the mirror body to get rid of the desktop shackles for convenient use

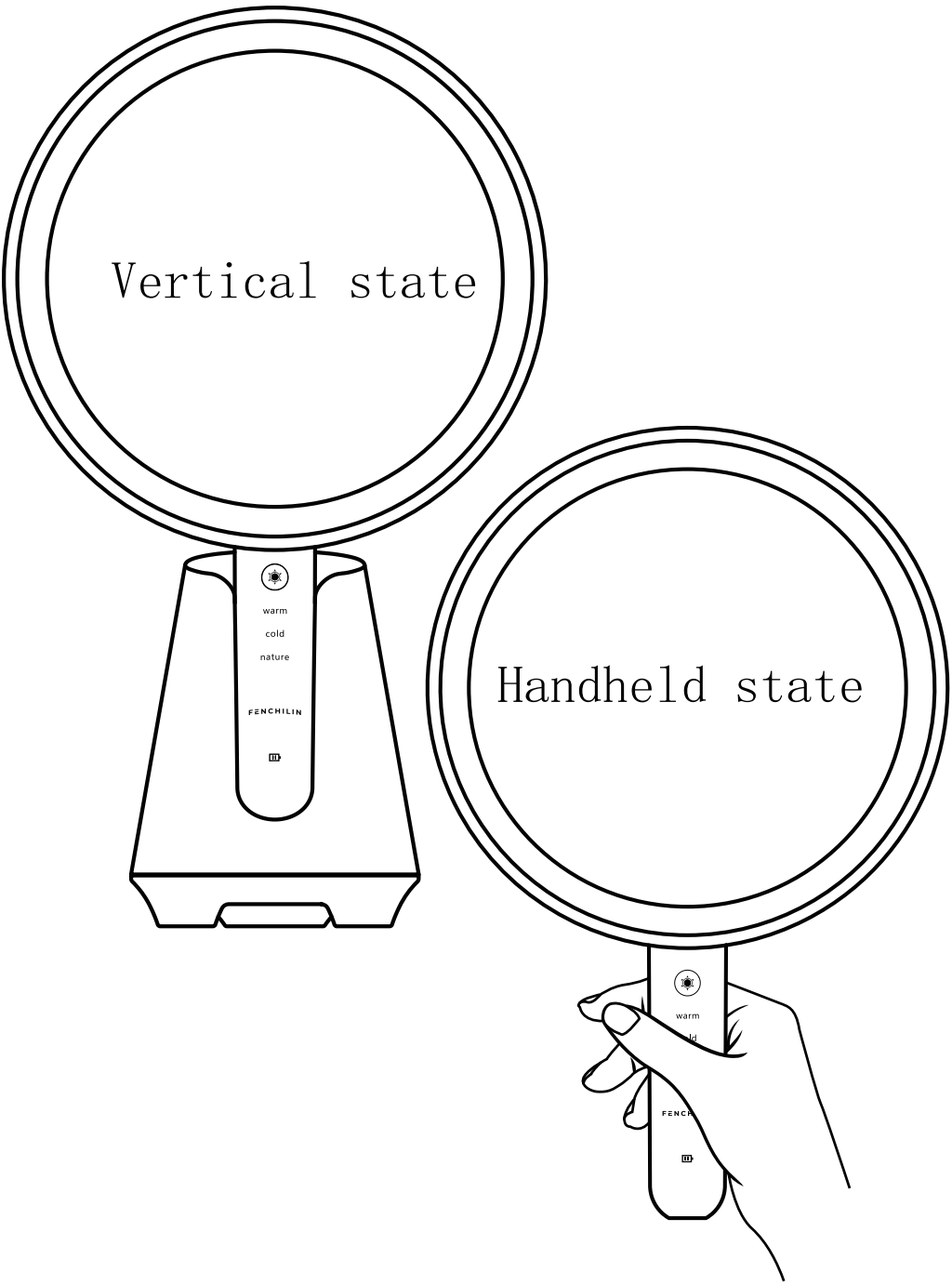

Light control

·After power on, the ☀ " touch button will alw
be on.
·Press the touch key one by one to switch the light source color and turn off the light state.
·In any light source mode, long press the touch button to adjust the brightness.

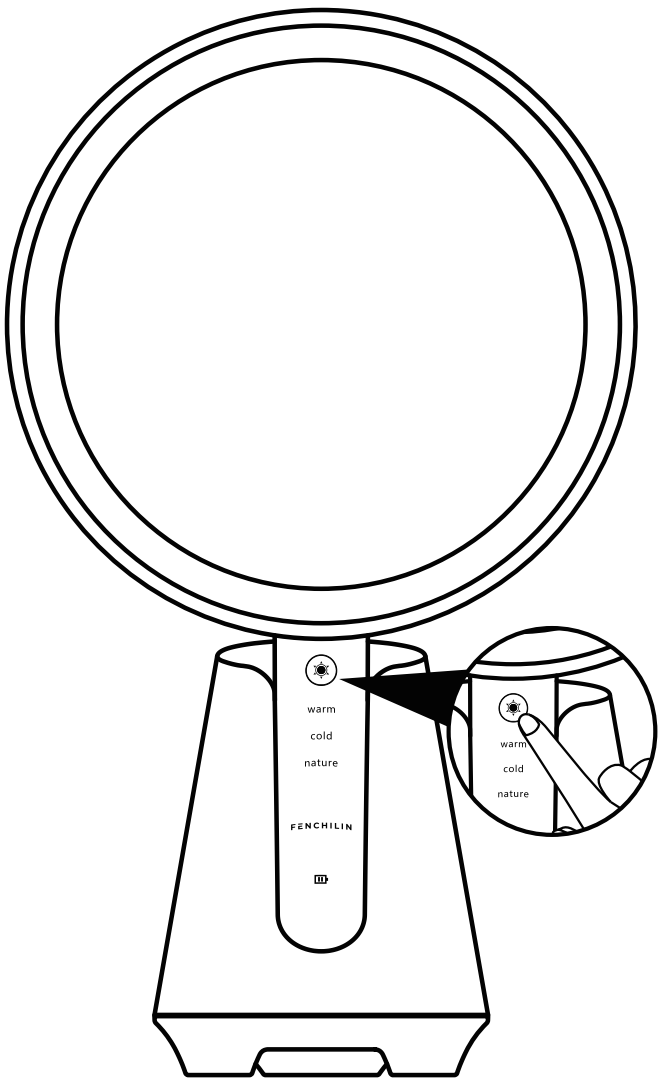

Cold light: Workplace lighting, look stylish for your commute.

Warm light: Restaurant slant warm light, attractive dating makeup.

Natural light: Daily sunlight, daily skin care and makeup.

Bluetooth speaker control

·When the power is connecting, short press" " to turn on/off the Bluetooth speaker.

·When the Bluetooth is turned on, the blue light flashes quickly for Bluetooth pairing, and flashes slowly for pairing. After connection, the music volume is controlle through the mobile phone.

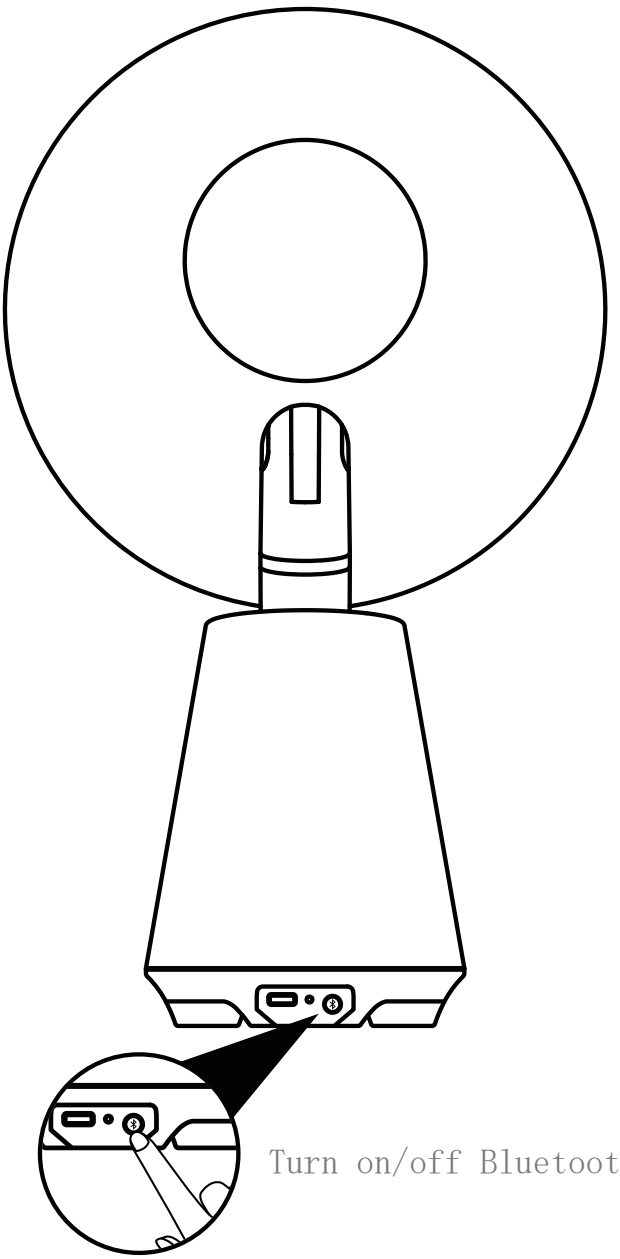

Turn on/off Bluetooth

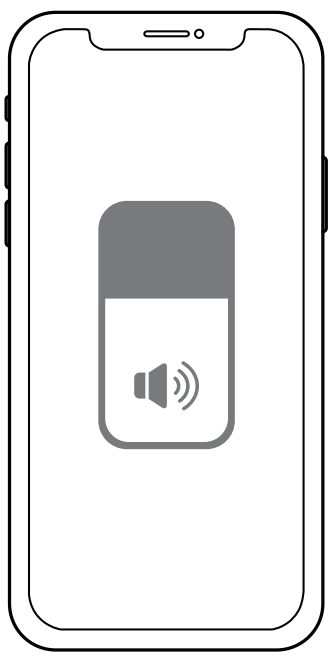

Cell phone controls volume

Power/Bluetooth indicator

·The red light always on means connecting to the power supply, but it is off when the power is no connected.。

·Blue light fast flashing means matching the Bluetooth, and slow flash is after connecting to the mobile phone.

Bluetooth switch

·Short press to turn bluetooth on/off.

Type - C charging port

·Charging voltage DC5V±0.1V
charging current 0.7A

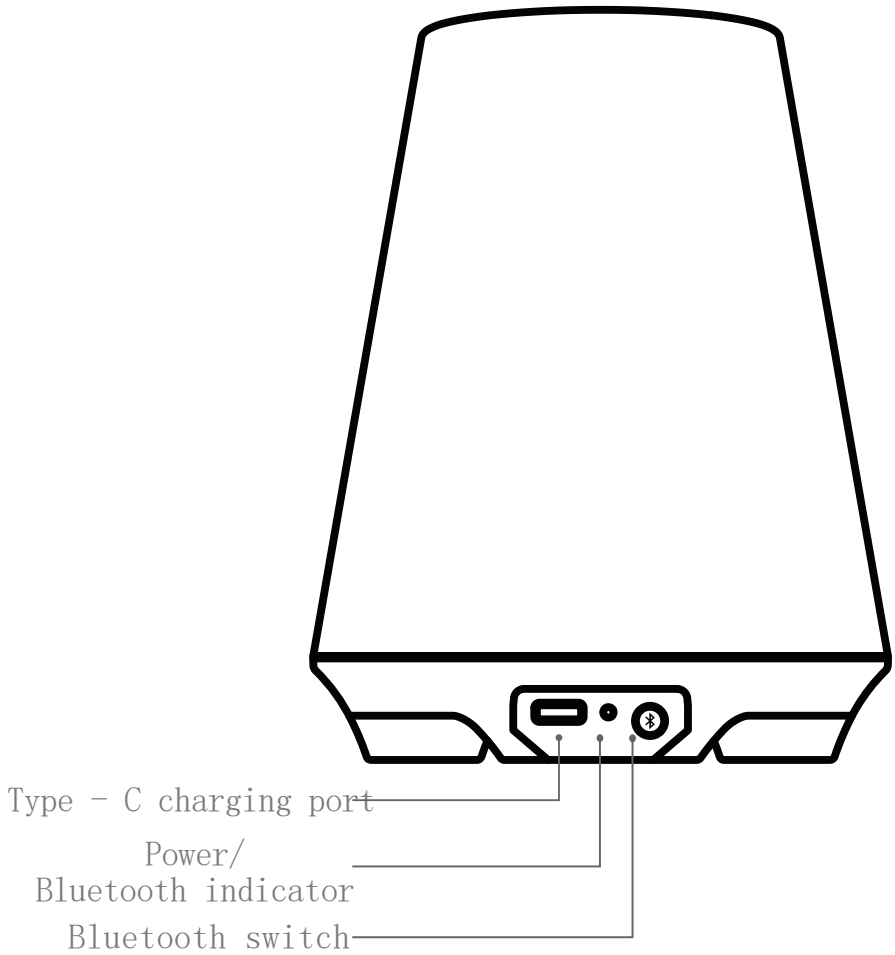

Charging indicator light

• When connected to the power in the state of on/off, the red light flashes for charging, and the green light is always on when the power is

• When the green light is always on after starting, it means the battery is sufficient. If the red light flashes and goes out, it means the battery is insufficient. Please charge it in time

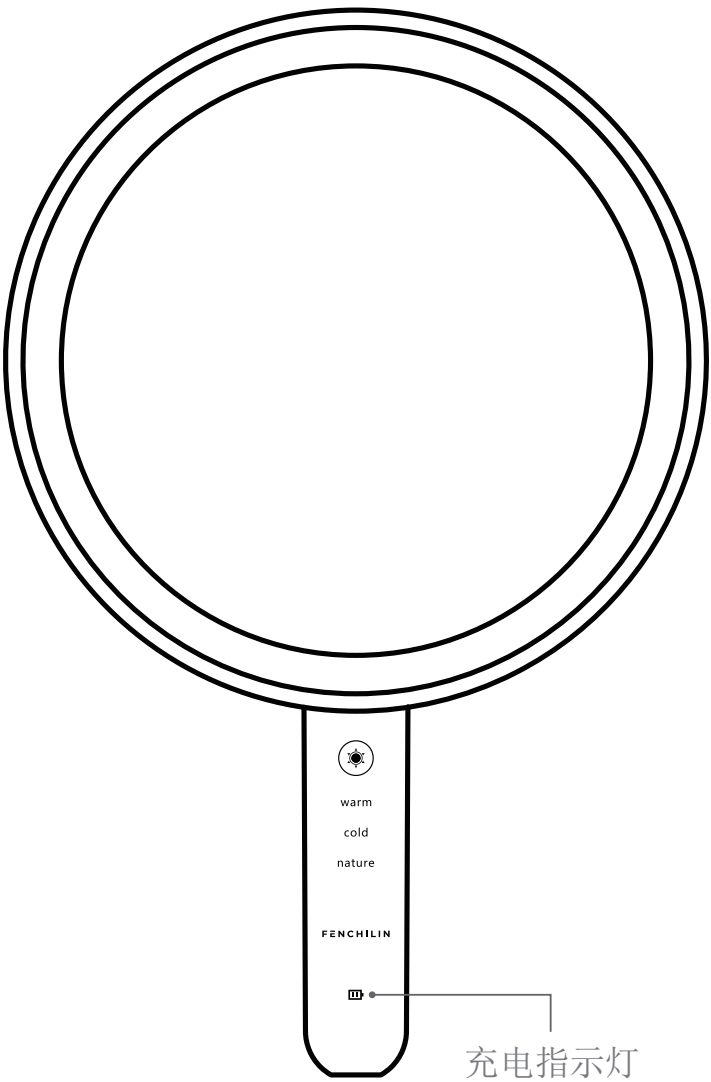

Multiple mirror area indication

• 5 times magnifying glass is built into the back of handheld mirror, controlling all details of pores.

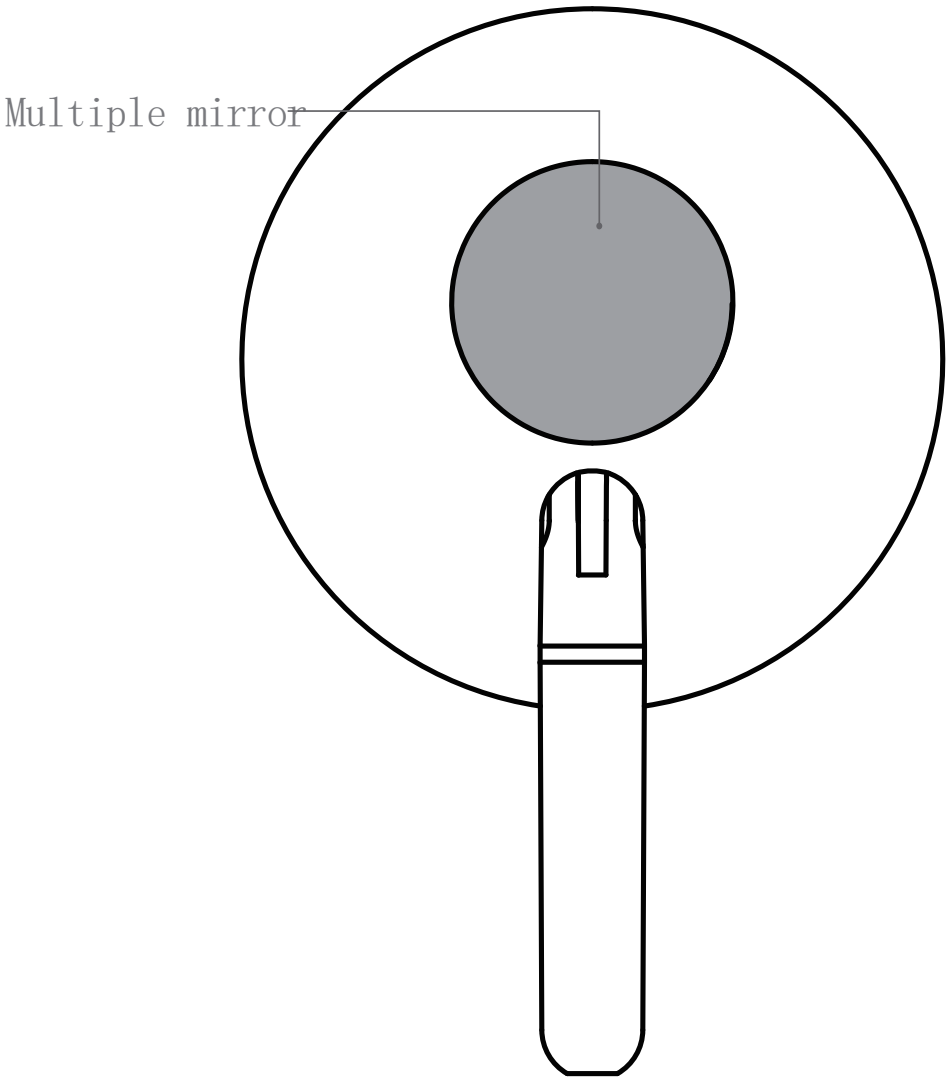

Basic parameters

Product Name	FENCHILIN Handheld Beauty Mirror	Product Model	MZMGJ0090
Product Size	208x124x358mm	Input Voltage	DC5V±0.1V

Precautions (Precautions for power Supply)

• Do not pinch or bend the charging wire excessively, otherwise the core may be exposed or broken

• Do not use inappropriate AC socket

• This product has built-in battery, which cannot be replaced by the user. Please do not try to remove it.

Safety instructions

• Do not place the product in the place where children or pets can easily touch it, in case the mirror accident touches it, falls off, scratches and other risks.

• During the use of the product, please stop using it immediately if any abnormal situation occurs.

• It is strictly prohibited to put the product near or into the fire source to avoid fire and explosion haza

• Do not use in unstable places, such as those prone to dumping and falling.

WARNING

Do not use in the bathroom and other places where the temperature, humidity and water will be stained.
This product has not been waterproof treatment.

The name and content of harmful substances in the product

Harmful substances						
	Lead (Pb)	mercury (Hg)	cadmium (Cd)	hexavalent chromium (Cr(VI))	polybrominated biphenyl (PBB)	polybrominated diphenyl ether (PBDE)
Built-in circuit board	×	○	○	○	○	○
The shell	×	○	○	○	○	○
Accessories	×	○	○	○	○	○

This form is prepared according to the provisions of SJ/T11364M
○:It means that the harmful substance has the components. All the homogeneous materials contained in the components are under the prescribed limit of GB/T 265/2.
×:means that the hazardous substance in at least one homogeneous material of the component is in excess of the specified limit of GB/T26572.

Product certification

CE RoHS BSCI ISO

FCC Warning:
This equipment has been tested and found to comply with the limits for a Class B digital device, pursuant to part 15 of the FCC Rules. These limits are designed to provide reasonable protection against harmful interference in a residential installation. This equipment generates, uses and can radiate radio frequency energy and, if not installed and used in accordance with the instructions, may cause harmful interference to radio communications. However, there is no guarantee that interference will not occur in a particular installation. If this equipment does cause harmful interference to radio or television reception, which can be determined by turning the equipment off and on, the user is encouraged to try to correct the interference by one or more of the following measures:
o Reorient or relocate the receiving antenna.
o Increase the separation between the equipment and receiver.
o Connect the equipment into an outlet on a circuit different from that to which the receiver is connected.
o Consult the dealer or an experienced radio/TV technician for help.

Caution: Any changes or modifications to this device not explicitly approved by manufacturer could void your authority to operate this equipment.

This device complies with part 15 of the FCC Rules. Operation is subject to the following two conditions: (1) This device may not cause harmful interference, and (2) this device must accept any interference received, including interference that may cause undesired operation.

The device has been evaluated to meet general RF exposure requirement. The device can be used in portable exposure condition without restriction.