# TEST REPORT

| | | |
|---|---|---|
| **Product** | : | Merlyn USB Dongle |
| **Trade mark** | : | N/A |
| **Model/Type reference** | : | MUDG1, MUDG2 |
| **Serial Number** | : | N/A |
| **Report Number** | : | EED32P81691801 |
| **FCC ID** | : | 2AYDX-MUDG1 |
| **Date of Issue** | : | Nov. 15, 2023 |
| **Test Standards** | : | 47 CFR Part 15 Subpart C |
| **Test result** | : | PASS |

Prepared for:

**Merlyn Mind, Inc.**

**8 West 40th Street, Floor 20, New York, NY 10018, USA**

Prepared by:

**Centre Testing International Group Co., Ltd.**
**Hongwei Industrial Zone, Bao'an 70 District,**
**Shenzhen, Guangdong, China**
**TEL: +86-755-3368 3668**
**FAX: +86-755-3368 3385**

Compiled by: mark. chen. Reviewed by: Tom Chen

Mark Chen Tom Chen

Approved by: Aaron Ma Date: Nov. 15, 2023

Aaron Ma

Check No.: 3717241023

CENTRE TESTING INTERNATIONAL GROUP CO.,LTD. CTI Report Seal

# 2 Content

**1 COVER PAGE** ..... 1
**2 CONTENT** ..... 2
**3 VERSION** ..... 3
**4 TEST SUMMARY** ..... 4
**5 GENERAL INFORMATION** ..... 5
5.1 CLIENT INFORMATION ..... 5
5.2 GENERAL DESCRIPTION OF EUT ..... 5
5.3 TEST CONFIGURATION ..... 7
5.4 TEST ENVIRONMENT ..... 7
5.5 DESCRIPTION OF SUPPORT UNITS ..... 8
5.6 TEST LOCATION ..... 8
5.7 MEASUREMENT UNCERTAINTY (95% CONFIDENCE LEVELS, K=2) ..... 8
**6 EQUIPMENT LIST** ..... 9
**7 TEST RESULTS AND MEASUREMENT DATA** ..... 12
7.1 ANTENNA REQUIREMENT ..... 12
7.2 MAXIMUM CONDUCTED OUTPUT POWER ..... 13
7.3 DTS BANDWIDTH ..... 14
7.4 MAXIMUM POWER SPECTRAL DENSITY ..... 15
7.5 BAND EDGE MEASUREMENTS AND CONDUCTED SPURIOUS EMISSION ..... 16
7.6 RADIATED SPURIOUS EMISSION & RESTRICTED BANDS ..... 17
**8 APPENDIX BLE** ..... 32
**9 PHOTOGRAPHS OF TEST SETUP** ..... 33
**10 PHOTOGRAPHS OF EUT CONSTRUCTIONAL DETAILS** ..... 35

# 3 Version

| Version No. | Date | Description |
|---|---|---|
| 00 | Nov. 15, 2023 | Original |
| | | |
| | | |

# 4 Test Summary

| Test Item | Test Requirement | Result |
|---|---|---|
| **Antenna Requirement** | 47 CFR Part 15 Subpart C Section 15.203/15.247 (c) | PASS |
| **AC Power Line Conducted Emission** | 47 CFR Part 15 Subpart C Section 15.207 | N/A |
| **DTS Bandwidth** | 47 CFR Part 15 Subpart C Section 15.247 (a)(2) | PASS |
| **Maximum Conducted Output Power** | 47 CFR Part 15 Subpart C Section 15.247 (b)(3) | PASS |
| **Maximum Power Spectral Density** | 47 CFR Part 15 Subpart C Section 15.247 (e) | PASS |
| **Band Edge Measurements** | 47 CFR Part 15 Subpart C Section 15.247(d) | PASS |
| **Conducted Spurious Emissions** | 47 CFR Part 15 Subpart C Section 15.247(d) | PASS |
| **Radiated Spurious Emission & Restricted bands** | 47 CFR Part 15 Subpart C Section 15.205/15.209 | PASS |

Remark:
Company Name and Address shown on Report, the sample(s) and sample Information were provided by the applicant who should be responsible for the authenticity which CTI hasn't verified.
Model: MUDG1, MUDG2
Only the model MUDG1 was tested. Their electrical circuit design, layout, components used and internal wiring are identical. Only the color of the appearance is different.

# 5 General Information

## 5.1 Client Information

| | |
|---|---|
| Applicant: | Merlyn Mind, Inc. |
| Address of Applicant: | 8 West 40th Street, Floor 20, New York, NY 10018, USA |
| Manufacturer: | Shenzhen C&D Electronics Co.,Ltd |
| Address of Manufacturer: | 9/F, Block A Building 9, Baoneng S&T Park, Qing Xiang Rd., Longhua, Shenzhen 518110,China |
| Factory: | Huizhou C&D Industry Co.,Ltd. |
| Address of Factory: | C&D Industrial Park, Liantangmian Village, Sanhe Street, Huiyang District, Huizhou, Guangdong, China |

## 5.2 General Description of EUT

| | | |
|---|---|---|
| Product Name: | Merlyn USB Dongle | |
| Model No.(EUT): | MUDG1, MUDG2 | |
| Test Model No.: | MUDG1 | |
| Trade mark: | N/A | |
| Product Type: | ☐ Mobile ☒ Portable ☐ Fix Location | |
| Test software of EUT: | EMI_TEST | |
| Operation Frequency: | 2402MHz~2480MHz | |
| Modulation Type: | GFSK | |
| Transfer Rate: | 1Mbps, 2Mbps | |
| Number of Channel: | 40 | |
| Antenna Type: | PCB Antenna | |
| Antenna Gain: | 2.12dBi | |
| Power Supply: | USB port: | DC 5V |
| Test Voltage: | DC 5.0V | |
| Sample Received Date: | Oct. 25, 2023 | |
| Sample tested Date: | Oct. 25, 2023 to Nov. 03, 2023 | |

| Operation Frequency each of channel | | | | | | | |
|---|---|---|---|---|---|---|---|
| Channel | Frequency | Channel | Frequency | Channel | Frequency | Channel | Frequency |
| 0 | 2402MHz | 10 | 2422MHz | 20 | 2442MHz | 30 | 2462MHz |
| 1 | 2404MHz | 11 | 2424MHz | 21 | 2444MHz | 31 | 2464MHz |
| 2 | 2406MHz | 12 | 2426MHz | 22 | 2446MHz | 32 | 2466MHz |
| 3 | 2408MHz | 13 | 2428MHz | 23 | 2448MHz | 33 | 2468MHz |
| 4 | 2410MHz | 14 | 2430MHz | 24 | 2450MHz | 34 | 2470MHz |
| 5 | 2412MHz | 15 | 2432MHz | 25 | 2452MHz | 35 | 2472MHz |
| 6 | 2414MHz | 16 | 2434MHz | 26 | 2454MHz | 36 | 2474MHz |
| 7 | 2416MHz | 17 | 2436MHz | 27 | 2456MHz | 37 | 2476MHz |
| 8 | 2418MHz | 18 | 2438MHz | 28 | 2458MHz | 38 | 2478MHz |
| 9 | 2420MHz | 19 | 2440MHz | 29 | 2460MHz | 39 | 2480MHz |

Note:

In section 15.31(m), regards to the operating frequency range over 10 MHz, the lowest frequency, the middle frequency, and the highest frequency of channel were selected to perform the test, and the selected channel see below:

| Channel | Frequency |
|---|---|
| The lowest channel (CH0) | 2402MHz |
| The middle channel (CH19) | 2440MHz |
| The highest channel (CH39) | 2480MHz |

## 5.3 Test Configuration

| EUT Test Software Settings: | | | | |
|---|---|---|---|---|
| Software: | EMI_TEST | | | |
| EUT Power Grade: | Class2 (Power level is built-in set parameters and cannot be changed and selected) | | | |
| Use test software to set the lowest frequency, the middle frequency and the highest frequency keep transmitting of the EUT. | | | | |
| Test Mode | Modulation | Rate | Channel | Frequency(MHz) |
| Mode a | GFSK | 1Mbps | CH0 | 2402 |
| Mode b | GFSK | 1Mbps | CH19 | 2440 |
| Mode c | GFSK | 1Mbps | CH39 | 2480 |
| Mode d | GFSK | 2Mbps | CH0 | 2402 |
| Mode e | GFSK | 2Mbps | CH19 | 2440 |
| Mode f | GFSK | 2Mbps | CH39 | 2480 |

## 5.4 Test Environment

| Operating Environment: | |
|---|---|
| **Radiated Spurious Emissions:** | |
| Temperature: | 22~25.0 °C |
| Humidity: | 50~55 % RH |
| Atmospheric Pressure: | 1010mbar |
| **RF Conducted:** | |
| Temperature: | 22~25.0 °C |
| Humidity: | 50~55 % RH |
| Atmospheric Pressure: | 1010mbar |

## 5.5 Description of Support Units

The EUT has been tested with associated equipment below.

1) support equipment

| Description | Manufacturer | Model No. | Certification | Supplied by |
|---|---|---|---|---|
| Netbook | ASUS | FL8700J | FCC&CE | CTI |

## 5.6 Test Location

All tests were performed at:

Centre Testing International Group Co., Ltd
Building C, Hongwei Industrial Park Block 70, Bao'an District, Shenzhen, China
Telephone: +86 (0) 755 33683668 Fax:+86 (0) 755 33683385
No tests were sub-contracted.
FCC Designation No.: CN1164

## 5.7 Measurement Uncertainty (95% confidence levels, k=2)

| No. | Item | Measurement Uncertainty |
|---|---|---|
| 1 | Radio Frequency | $7.9 \times 10^{-8}$ |
| 2 | RF power, conducted | 0.46dB (30MHz-1GHz) |
| | | 0.55dB (1GHz-40GHz) |
| 3 | Radiated Spurious emission test | 3.3dB (9kHz-30MHz) |
| | | 4.3dB (30MHz-1GHz) |
| | | 4.5dB (1GHz-18GHz) |
| | | 3.4dB (18GHz-40GHz) |
| 4 | Conduction emission | 3.5dB (9kHz to 150kHz) |
| | | 3.1dB (150kHz to 30MHz) |
| 5 | Temperature test | 0.64°C |
| 6 | Humidity test | 3.8% |
| 7 | DC power voltages | 0.026% |

# 6 Equipment List

| RF test system | | | | | |
|---|---|---|---|---|---|
| **Equipment** | **Manufacturer** | **Model No.** | **Serial Number** | **Cal. Date (mm-dd-yyyy)** | **Cal. Due date (mm-dd-yyyy)** |
| Communication tset set | R&S | CMW500 | 107929 | 06-28-2023 | 06-27-2024 |
| Signal Generator | R&S | SMBV100A | 1407.6004K02-262149-CV | 09-05-2023 | 09-04-2024 |
| Spectrum Analyzer | R&S | FSV40 | 101200 | 07-25-2023 | 07-24-2024 |
| RF control unit(power unit) | MWRF-test | MW100-RFCB | MW220620CTI-42 | 06-28-2023 | 06-27-2024 |
| high-low temperature test chamber | Dong Guang Qin Zhuo | LK-80GA | QZ20150611879 | 12-19-2022 | 12-18-2023 |
| Temperature/ Humidity Indicator | biaozhi | HM10 | 1804186 | 06-01-2023 | 05-31-2024 |
| BT&WI-FI Automatic test software | MWRF-test | MTS 8310 | 2.0.0.0 | --- | --- |

| 3M Semi-anechoic Chamber (2)- Radiated disturbance Test | | | | | |
|---|---|---|---|---|---|
| Equipment | Manufacturer | Model | Serial No. | Cal. Date | Due Date |
| 3M Chamber & Accessory Equipment | TDK | SAC-3 | --- | 05/22/2022 | 05/21/2025 |
| Receiver | R&S | ESCI7 | 100938-003 | 09-22-2023 | 09-21-2024 |
| TRILOG Broadband Antenna | schwarzbeck | VULB 9163 | 9163-618 | 05/22/2022 | 05/21/2025 |
| Loop Antenna | Schwarzbeck | FMZB 1519B | 1519B-076 | 04/15/2021 | 04/14/2024 |
| Multi device Controller | maturo | NCD/070/10711112 | --- | --- | --- |
| Horn Antenna | ETS-LINGREN | BBHA 9120D | 9120D-1869 | 04/15/2021 | 04/14/2024 |
| Microwave Preamplifier | Agilent | 8449B | 3008A02425 | 06/20/2023 | 06/19/2024 |
| Test software | Fara | EZ-EMC | EMEC-3A1-Pre | --- | --- |

| 3M full-anechoic Chamber | | | | | |
|---|---|---|---|---|---|
| **Equipment** | **Manufacturer** | **Model No.** | **Serial Number** | **Cal. Date (mm-dd-yyyy)** | **Cal. Due date (mm-dd-yyyy)** |
| RSE Automatic test software | JS Tonscend | JS36-RSE | 10166 | --- | --- |
| Receiver | Keysight | N9038A | MY57290136 | 02-27-2023 | 02-26-2024 |
| Spectrum Analyzer | Keysight | N9020B | MY57111112 | 02-21-2023 | 02-20-2024 |
| Spectrum Analyzer | Keysight | N9030B | MY57140871 | 02-21-2023 | 02-20-2024 |
| TRILOG Broadband Antenna | Schwarzbeck | VULB 9163 | 9163-1148 | 04-28-2021 | 04-27-2024 |
| Horn Antenna | Schwarzbeck | BBHA 9170 | 9170-832 | 04-15-2021 | 04-14-2024 |
| Horn Antenna | ETS-LINDGREN | 3117 | 57407 | 07-04-2021 | 07-03-2024 |
| Preamplifier | EMCI | EMC184055SE | 980597 | 04-13-2023 | 04-12-2024 |
| Preamplifier | EMCI | EMC001330 | 980563 | 03-28-2023 | 03-27-2024 |
| Preamplifier | JS Tonscend | TAP-011858 | AP21B806112 | 07-25-2023 | 07-24-2024 |
| Communication test set | R&S | CMW500 | 102898 | 12-23-2022 | 12-22-2023 |
| Temperature/ Humidity Indicator | biaozhi | GM1360 | EE1186631 | 04-11-2023 | 04-10-2024 |
| Fully Anechoic Chamber | TDK | FAC-3 | --- | 01-09-2021 | 01-08-2024 |
| Cable line | Times | SFT205-NMSM-2.50M | 394812-0001 | --- | --- |
| Cable line | Times | SFT205-NMSM-2.50M | 394812-0002 | --- | --- |
| Cable line | Times | SFT205-NMSM-2.50M | 394812-0003 | --- | --- |
| Cable line | Times | SFT205-NMSM-2.50M | 393495-0001 | --- | --- |
| Cable line | Times | EMC104-NMNM-1000 | SN160710 | --- | --- |
| Cable line | Times | SFT205-NMSM-3.00M | 394813-0001 | --- | --- |
| Cable line | Times | SFT205-NMNM-1.50M | 381964-0001 | --- | --- |
| Cable line | Times | SFT205-NMSM-7.00M | 394815-0001 | --- | --- |
| Cable line | Times | HF160-KMKM-3.00M | 393493-0001 | --- | --- |

# 7 Test results and Measurement Data

## 7.1 Antenna Requirement

| **Standard requirement:** | 47 CFR Part 15C Section 15.203 /247(c) |
|---|---|
| 15.203 requirement:<br>An intentional radiator shall be designed to ensure that no antenna other than that furnished by the responsible party shall be used with the device. The use of a permanently attached antenna or of an antenna that uses a unique coupling to the intentional radiator, the manufacturer may design the unit so that a broken antenna can be replaced by the user, but the use of a standard antenna jack or electrical connector is prohibited.<br>15.247(b) (4) requirement:<br>The conducted output power limit specified in paragraph (b) of this section is based on the use of antennas with directional gains that do not exceed 6 dBi. Except as shown in paragraph (c) of this section, if transmitting antennas of directional gain greater than 6 dBi are used, the conducted output power from the intentional radiator shall be reduced below the stated values in paragraphs (b)(1), (b)(2), and (b)(3) of this section, as appropriate, by the amount in dB that the directional gain of the antenna exceeds 6 dBi. | |
| **EUT Antenna:** | Please see Internal photos |
| The antenna is PCB antenna. The best case gain of the antenna is 2.12dBi. | |

## 7.2 Maximum Conducted Output Power

| | |
|---|---|
| Test Requirement: | 47 CFR Part 15C Section 15.247 (b)(3) |
| Test Method: | ANSI C63.10 2013 |
| Test Setup: | 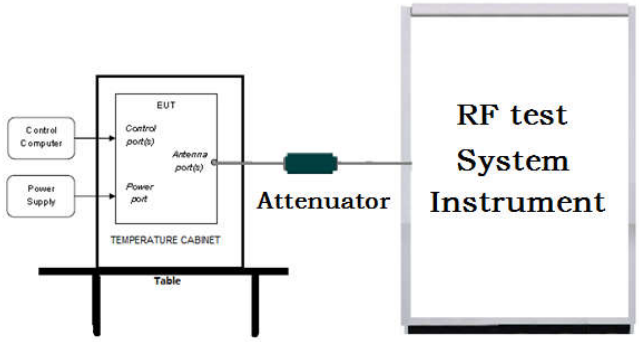 <br>Remark: Offset=Cable loss+ attenuation factor. |
| Test Procedure: | a) Set the RBW ⩾ DTS bandwidth.<br>b) Set VBW ⩾ 3 × RBW.<br>c) Set span ⩾ 3 x RBW<br>d) Sweep time = auto couple.<br>e) Detector = peak.<br>f) Trace mode = max hold.<br>g) Allow trace to fully stabilize.<br>h) Use peak marker function to determine the peak amplitude level. |
| Limit: | 30dBm |
| Test Mode: | Refer to clause 5.3 |
| Test Results: | Refer to Appendix BLE |

## 7.3 DTS Bandwidth

| | |
|---|---|
| Test Requirement: | 47 CFR Part 15C Section 15.247 (a)(2) |
| Test Method: | ANSI C63.10 2013 |
| Test Setup: | 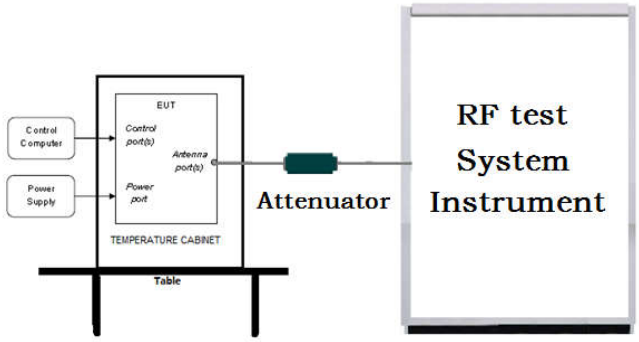 <br>Remark: Offset=Cable loss+ attenuation factor. |
| Test Procedure: | a) Set RBW = 100 kHz.<br>b) Set the VBW ⩾[3 × RBW].<br>c) Detector = peak.<br>d) Trace mode = max hold.<br>e) Sweep = auto couple.<br>f) Allow the trace to stabilize.<br>g) Measure the maximum width of the emission that is constrained by the frequencies associated with the two outermost amplitude points (upper and lower frequencies) that are attenuated by 6 dB relative to the maximum level measured in the fundamental emission. |
| Limit: | ≥ 500 kHz |
| Test Mode: | Refer to clause 5.3 |
| Test Results: | Refer to Appendix BLE |

## 7.4 Maximum Power Spectral Density

| | |
|---|---|
| Test Requirement: | 47 CFR Part 15C Section 15.247 (e) |
| Test Method: | ANSI C63.10 2013 |
| Test Setup: | 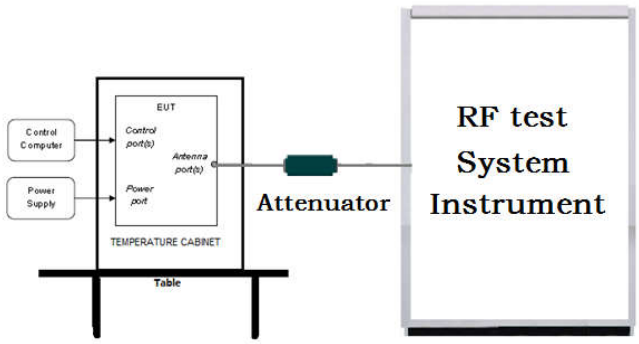 <br>Remark: Offset=Cable loss+ attenuation factor. |
| Test Procedure: | a) Set analyzer center frequency to DTS channel center frequency.<br>b) Set the span to 1.5 times the DTS bandwidth.<br>c) Set the RBW to 3 kHz ＜ RBW ＜ 100 kHz.<br>d) Set the VBW ＞ [3 × RBW].<br>e) Detector = peak.<br>f) Sweep time = auto couple.<br>g) Trace mode = max hold.<br>h) Allow trace to fully stabilize.<br>i) Use the peak marker function to determine the maximum amplitude level within the RBW.<br>j) If measured value exceeds requirement, then reduce RBW (but no less than 3 kHz) and repeat. |
| Limit: | ≤8.00dBm/3kHz |
| Test Mode: | Refer to clause 5.3 |
| Test Results: | Refer to Appendix BLE |

## 7.5 Band Edge measurements and Conducted Spurious Emission

| | |
|---|---|
| Test Requirement: | 47 CFR Part 15C Section 15.247 (d) |
| Test Method: | ANSI C63.10 2013 |
| Test Setup: | 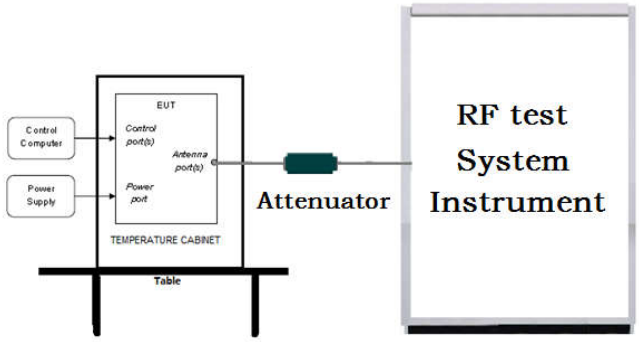 <br>Remark: Offset=Cable loss+ attenuation factor. |
| Test Procedure: | a) Set RBW =100KHz.<br>b) Set VBW = 300KHz.<br>c) Sweep time = auto couple.<br>d) Detector = peak.<br>e) Trace mode = max hold.<br>f) Allow trace to fully stabilize.<br>g) Use peak marker function to determine the peak amplitude level. |
| Limit: | In any 100 kHz bandwidth outside the frequency band in which the spread spectrum intentional radiator is operating, the radio frequency power that is produced by the intentional radiator shall be at least 20 dB below that in the 100 kHz bandwidth within the band that contains the highest level of the desired power, based on either an RF conducted or a radiated measurement. |
| Test Mode: | Refer to clause 5.3 |
| Test Results: | Refer to Appendix BLE |

## 7.6 Radiated Spurious Emission & Restricted bands

| | |
|---|---|
| Test Requirement: | 47 CFR Part 15C Section 15.209 and 15.205 |
| Test Method: | ANSI C63.10 2013 |
| Test Site: | Measurement Distance: 3m (Semi-Anechoic Chamber) |
| Receiver Setup: | |

| Frequency | Detector | RBW | VBW | Remark |
|---|---|---|---|---|
| 0.009MHz-0.090MHz | Peak | 10kHz | 30kHz | Peak |
| 0.009MHz-0.090MHz | Average | 10kHz | 30kHz | Average |
| 0.090MHz-0.110MHz | Quasi-peak | 10kHz | 30kHz | Quasi-peak |
| 0.110MHz-0.490MHz | Peak | 10kHz | 30kHz | Peak |
| 0.110MHz-0.490MHz | Average | 10kHz | 30kHz | Average |
| 0.490MHz -30MHz | Quasi-peak | 10kHz | 30kHz | Quasi-peak |
| 30MHz-1GHz | Quasi-peak | 100 kHz | 300kHz | Quasi-peak |
| Above 1GHz | Peak | 1MHz | 3MHz | Peak |
| | Peak | 1MHz | 10kHz | Average |

Limit:

| Frequency | Field strength (microvolt/meter) | Limit (dBuV/m) | Remark | Measurement distance (m) |
|---|---|---|---|---|
| 0.009MHz-0.490MHz | 2400/F(kHz) | - | - | 300 |
| 0.490MHz-1.705MHz | 24000/F(kHz) | - | - | 30 |
| 1.705MHz-30MHz | 30 | - | - | 30 |
| 30MHz-88MHz | 100 | 40.0 | Quasi-peak | 3 |
| 88MHz-216MHz | 150 | 43.5 | Quasi-peak | 3 |
| 216MHz-960MHz | 200 | 46.0 | Quasi-peak | 3 |
| 960MHz-1GHz | 500 | 54.0 | Quasi-peak | 3 |
| Above 1GHz | 500 | 54.0 | Average | 3 |

Note: 15.35(b), Unless otherwise specified, the limit on peak radio frequency emissions is 20dB above the maximum permitted average emission limit applicable to the equipment under test. This peak limit applies to the total peak emission level radiated by the device.

| Test Setup: | |
|---|---|

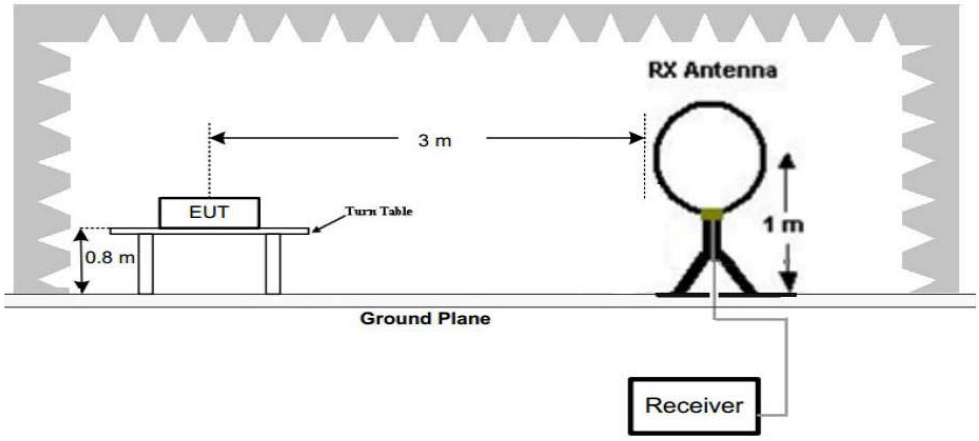


Figure 1. Below 30MHz

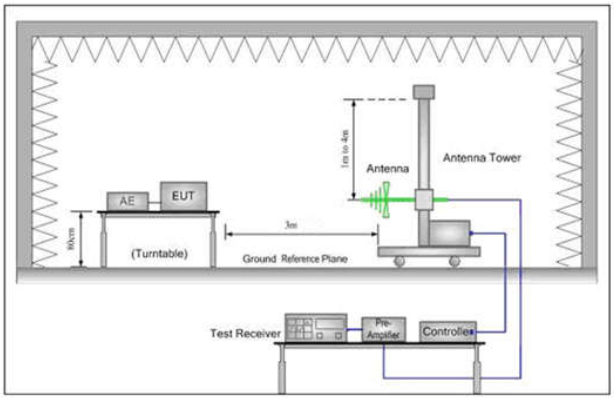


Figure 2. 30MHz to 1GHz

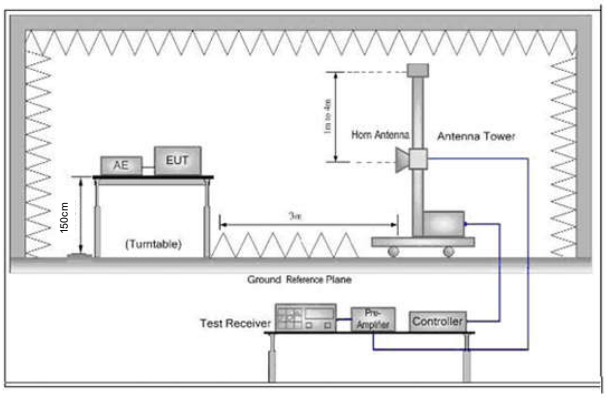


Figure 3. Above 1 GHz

| | |
|---|---|
| Test Procedure: | a. 1) Below 1G: The EUT was placed on the top of a rotating table 0.8 meters above the ground at a 3 meter semi-anechoic camber. The table was rotated 360 degrees to determine the position of the highest radiation.<br>2) Above 1G: The EUT was placed on the top of a rotating table 1.5 meters above the ground at a 3 meter semi-anechoic camber. The table was rotated 360 degrees to determine the position of the highest radiation.<br>Note: For the radiated emission test above 1GHz:<br>Place the measurement antenna away from each area of the EUT determined to be a source of emissions at the specified measurement distance, while keeping the measurement antenna aimed at the source of emissions at each frequency of significant emissions, with polarization oriented for maximum response. The measurement antenna may have to be higher or lower than the EUT, depending on the radiation pattern of the emission and staying aimed at the emission source for receiving the maximum signal. The final measurement antenna elevation shall be that which maximizes the emissions. The measurement antenna elevation for maximum emissions shall be restricted to a range of heights of from 1 m to 4 m above the ground or reference ground plane.<br>b. The EUT was set 3 meters away from the interference-receiving antenna, which was mounted on the top of a variable-height antenna tower.<br>c. The antenna height is varied from one meter to four meters above the ground to determine the maximum value of the field strength. Both horizontal and vertical polarizations of the antenna are set to make the measurement.<br>d. For each suspected emission, the EUT was arranged to its worst case and then the antenna was tuned to heights from 1 meter to 4 meters (for the test frequency of below 30MHz, the antenna was tuned to heights 1 meter) and the rotatable table was turned from 0 degrees to 360 degrees to find the maximum reading.<br>e. The test-receiver system was set to Peak Detect Function and Specified Bandwidth with Maximum Hold Mode.<br>f. If the emission level of the EUT in peak mode was 10dB lower than the limit specified, then testing could be stopped and the peak values of the EUT would be reported. Otherwise the emissions that did not have 10dB margin would be re-tested one by one using peak, quasi-peak or average method as specified and then reported in a data sheet.<br>g. Test the EUT in the lowest channel (2402MHz),the middle channel (2440MHz),the Highest channel (2480MHz)<br>h. The radiation measurements are performed in X, Y, Z axis positioning for Transmitting mode, and found the X axis positioning which it is the worst case.<br>i. Repeat above procedures until all frequencies measured was complete. |
| Test Mode: | Refer to clause 5.3 |
| Test Results: | Pass |

## Radiated Spurious Emission below 1GHz:

During the test, the Radiated Spurious Emission from 30MHz to 1GHz was performed in all modes, only the worst case lowest channel for GFSK 1M was recorded in the report.

Horizontal:

**Test Graph**

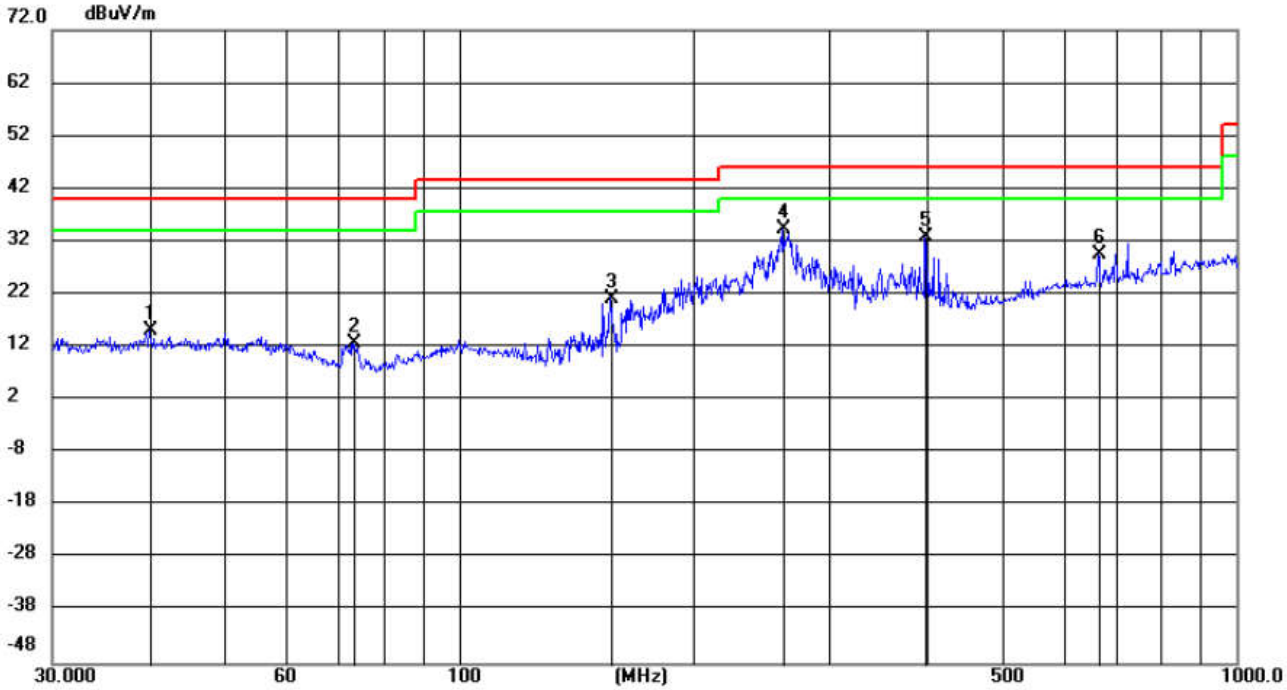


| No. | Mk. | Freq. | Reading Level | Correct Factor | Measure-ment | Limit | Margin | | Antenna Height | Table Degree | |
|---|---|---|---|---|---|---|---|---|---|---|---|
| | | MHz | dBuV | dB | dBuV/m | dBuV/m | dB | Detector | cm | degree | Comment |
| 1 | | 40.0644 | 1.18 | 14.09 | 15.27 | 40.00 | -24.73 | peak | 200 | 352 | |
| 2 | | 73.1923 | 3.07 | 9.78 | 12.85 | 40.00 | -27.15 | peak | 200 | 352 | |
| 3 | | 156.8972 | 11.27 | 10.03 | 21.30 | 43.50 | -22.20 | peak | 200 | 113 | |
| 4 | * | 261.9292 | 19.35 | 15.14 | 34.49 | 46.00 | -11.51 | peak | 100 | 118 | |
| 5 | | 398.5406 | 14.48 | 18.44 | 32.92 | 46.00 | -13.08 | peak | 100 | 77 | |
| 6 | | 664.7537 | 5.79 | 23.90 | 29.69 | 46.00 | -16.31 | peak | 100 | 170 | |

Vertical:

**Test Graph**

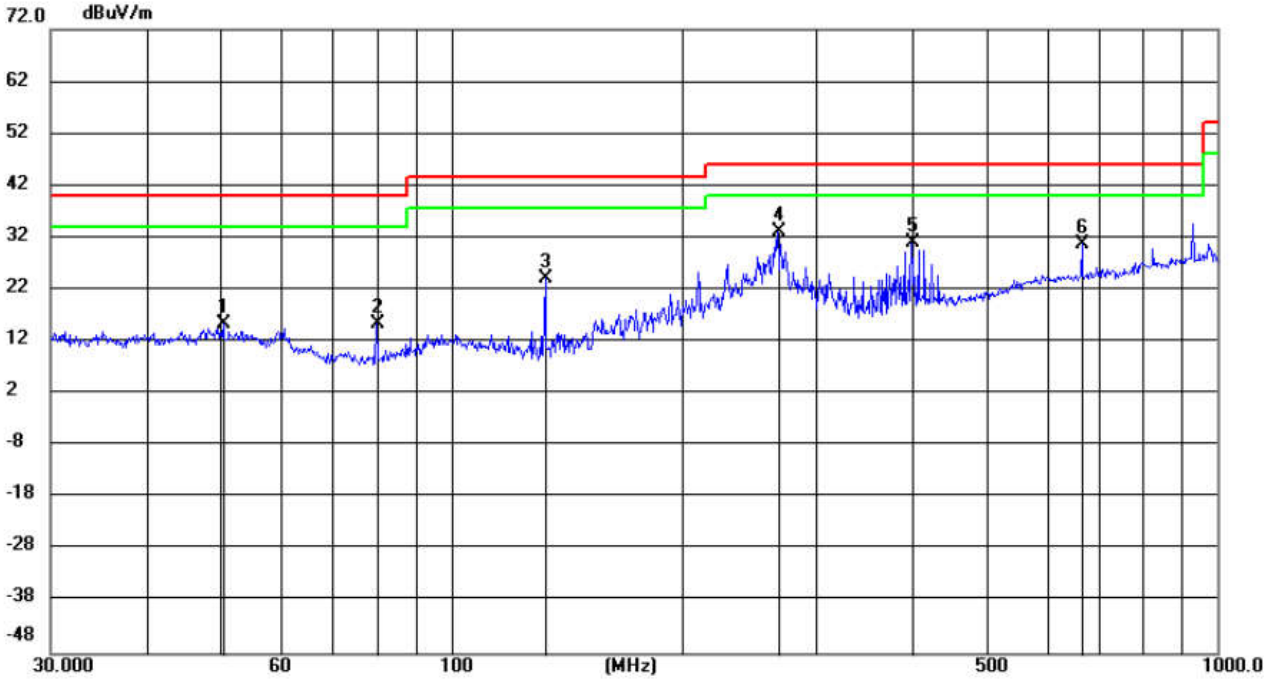


| No. | Mk. | Freq. | Reading Level | Correct Factor | Measure-ment | Limit | Margin | | Antenna Height | Table Degree | |
|---|---|---|---|---|---|---|---|---|---|---|---|
| | | MHz | dBuV | dB | dBuV/m | dBuV/m | dB | Detector | cm | degree | Comment |
| 1 | | 50.4885 | 1.40 | 14.13 | 15.53 | 40.00 | -24.47 | peak | 100 | 187 | |
| 2 | | 79.9964 | 5.98 | 9.55 | 15.53 | 40.00 | -24.47 | peak | 100 | 177 | |
| 3 | | 132.9645 | 14.56 | 9.72 | 24.28 | 43.50 | -19.22 | peak | 100 | 9 | |
| 4 | * | 267.3579 | 17.92 | 15.34 | 33.26 | 46.00 | -12.74 | peak | 200 | 181 | |
| 5 | | 399.3802 | 12.50 | 18.45 | 30.95 | 46.00 | -15.05 | peak | 100 | 352 | |
| 6 | | 666.1538 | 6.85 | 23.91 | 30.76 | 46.00 | -15.24 | peak | 100 | 332 | |

## Radiated Spurious Emission above 1GHz:

During the test, the Radiated Spurious Emission from above 1GHz was performed in all modes, only the worst case BLE 1M was recorded in the report.

| Mode: | | | BLE GFSK Transmitting | | | Channel: | | 2402 MHz | |
|---|---|---|---|---|---|---|---|---|---|
| NO | Freq. [MHz] | Factor [dB] | Reading [dBμV] | Level [dBμV/m] | Limit [dBμV/m] | Margin [dB] | Result | Polarity | Remark |
| 1 | 1598.6599 | 2.28 | 37.93 | 40.21 | 74.00 | 33.79 | Pass | H | PK |
| 2 | 3873.0582 | -19.14 | 52.68 | 33.54 | 74.00 | 40.46 | Pass | H | PK |
| 3 | 4804.1203 | -16.23 | 54.17 | 37.94 | 74.00 | 36.06 | Pass | H | PK |
| 4 | 7205.2804 | -11.83 | 66.62 | 54.79 | 74.00 | 19.21 | Pass | H | PK |
| 5 | 7207.2805 | -11.83 | 62.34 | 50.51 | 54.00 | 3.49 | Pass | H | AV |
| 6 | 12011.6008 | -5.32 | 53.14 | 47.82 | 74.00 | 26.18 | Pass | H | PK |
| 7 | 16282.8855 | 1.59 | 44.78 | 46.37 | 74.00 | 27.63 | Pass | H | PK |
| 8 | 1336.8337 | 1.18 | 38.31 | 39.49 | 74.00 | 34.51 | Pass | V | PK |
| 9 | 1991.8992 | 4.51 | 41.74 | 46.25 | 74.00 | 27.75 | Pass | V | PK |
| 10 | 3324.0216 | -19.90 | 57.25 | 37.35 | 74.00 | 36.65 | Pass | V | PK |
| 11 | 4804.1203 | -16.23 | 53.38 | 37.15 | 74.00 | 36.85 | Pass | V | PK |
| 12 | 7206.2804 | -11.83 | 63.33 | 51.50 | 74.00 | 22.50 | Pass | V | PK |
| 13 | 14410.7607 | 1.07 | 45.97 | 47.04 | 74.00 | 26.96 | Pass | V | PK |

| Mode: | | | BLE GFSK Transmitting | | | Channel: | | 2440 MHz | |
|---|---|---|---|---|---|---|---|---|---|
| NO | Freq. [MHz] | Factor [dB] | Reading [dBμV] | Level [dBμV/m] | Limit [dBμV/m] | Margin [dB] | Result | Polarity | Remark |
| 1 | 1426.4426 | 1.41 | 38.76 | 40.17 | 74.00 | 33.83 | Pass | H | PK |
| 2 | 2072.9073 | 4.79 | 37.41 | 42.20 | 74.00 | 31.80 | Pass | H | PK |
| 3 | 3832.0555 | -19.19 | 52.83 | 33.64 | 74.00 | 40.36 | Pass | H | PK |
| 4 | 4880.1253 | -16.21 | 52.06 | 35.85 | 74.00 | 38.15 | Pass | H | PK |
| 5 | 7320.288 | -11.65 | 67.54 | 55.89 | 74.00 | 18.11 | Pass | H | PK |
| 6 | 7320.288 | -11.65 | 61.27 | 49.62 | 54.00 | 4.38 | Pass | H | AV |
| 7 | 12558.6372 | -4.41 | 48.85 | 44.44 | 74.00 | 29.56 | Pass | H | PK |
| 8 | 1464.4464 | 1.44 | 38.39 | 39.83 | 74.00 | 34.17 | Pass | V | PK |
| 9 | 1999.9 | 4.55 | 41.68 | 46.23 | 74.00 | 27.77 | Pass | V | PK |
| 10 | 4994.1329 | -15.84 | 54.86 | 39.02 | 74.00 | 34.98 | Pass | V | PK |
| 11 | 7320.288 | -11.65 | 59.86 | 48.21 | 74.00 | 25.79 | Pass | V | PK |
| 12 | 9206.4138 | -7.88 | 48.04 | 40.16 | 74.00 | 33.84 | Pass | V | PK |
| 13 | 13775.7184 | -1.66 | 46.42 | 44.76 | 74.00 | 29.24 | Pass | V | PK |

| Mode: | | | BLE GFSK Transmitting | | | Channel: | | 2480 MHz | |
|---|---|---|---|---|---|---|---|---|---|
| NO | Freq. [MHz] | Factor [dB] | Reading [dBμV] | Level [dBμV/m] | Limit [dBμV/m] | Margin [dB] | Result | Polarity | Remark |
| 1 | 1438.8439 | 1.42 | 38.43 | 39.85 | 74.00 | 34.15 | Pass | H | PK |
| 2 | 2030.103 | 4.65 | 37.87 | 42.52 | 74.00 | 31.48 | Pass | H | PK |
| 3 | 4296.0864 | -17.27 | 51.31 | 34.04 | 74.00 | 39.96 | Pass | H | PK |
| 4 | 4959.1306 | -15.98 | 52.62 | 36.64 | 74.00 | 37.36 | Pass | H | PK |
| 5 | 7439.296 | -11.34 | 68.42 | 57.08 | 74.00 | 16.92 | Pass | H | PK |
| 6 | 7440.296 | -11.34 | 61.10 | 49.76 | 54.00 | 4.24 | Pass | H | AV |
| 7 | 12554.637 | -4.44 | 47.97 | 43.53 | 74.00 | 30.47 | Pass | H | PK |
| 8 | 1462.6463 | 1.44 | 38.41 | 39.85 | 74.00 | 34.15 | Pass | V | PK |
| 9 | 1999.0999 | 4.54 | 42.94 | 47.48 | 74.00 | 26.52 | Pass | V | PK |
| 10 | 3986.0657 | -18.92 | 57.64 | 38.72 | 74.00 | 35.28 | Pass | V | PK |
| 11 | 5000.1333 | -15.82 | 57.39 | 41.57 | 74.00 | 32.43 | Pass | V | PK |
| 12 | 7440.296 | -11.34 | 62.15 | 50.81 | 74.00 | 23.19 | Pass | V | PK |
| 13 | 12672.6448 | -4.68 | 48.55 | 43.87 | 74.00 | 30.13 | Pass | V | PK |

Remark:

1) The field strength is calculated by adding the Antenna Factor, Cable Factor & Preamplifier. The basic equation with a sample calculation is as follows:

   Final Test Level =Receiver Reading + Antenna Factor + Cable Factor – Preamplifier Factor

2) Scan from 9kHz to 25GHz, the disturbance above 10GHz and below 30MHz was very low. As shown in this section, for frequencies above 1GHz, the field strength limits are based on average limits. However, the peak field strength of any emission shall not exceed the maximum permitted average limits specified above by more than 20 dB under any condition of modulation. So, only the peak measurements were shown in the report.

## Restricted bands:

**Test plot as follows:**

| Mode: | BLE GFSK Transmitting | Channel: | 2402MHz |
|---|---|---|---|
| Remark: | 1M | | |

**Test Graph**

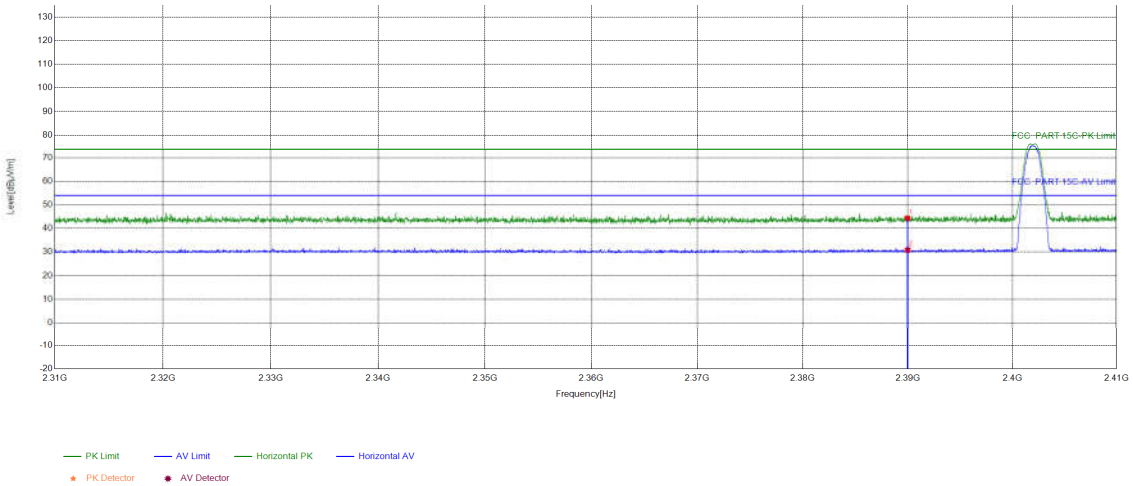


| Suspected List | | | | | | | | | |
|---|---|---|---|---|---|---|---|---|---|
| NO | Freq. [MHz] | Factor [dB] | Reading [dBμV] | Level [dBμV/m] | Limit [dBμV/m] | Margin [dB] | Result | Polarity | Remark |
| 1 | 2390 | 5.77 | 38.50 | 44.27 | 74.00 | 29.73 | PASS | Horizontal | PK |
| 2 | 2390 | 5.77 | 25.08 | 30.85 | 54.00 | 23.15 | PASS | Horizontal | AV |

| Mode: | BLE GFSK Transmitting | Channel: | 2402MHz |
|---|---|---|---|
| Remark: | 1M | | |

**Test Graph**

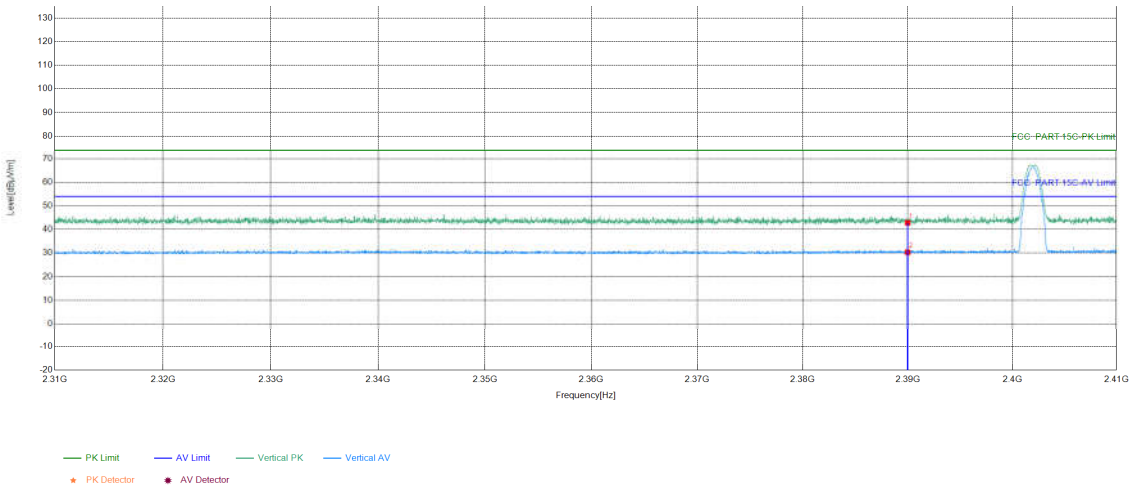


| Suspected List | | | | | | | | | |
|---|---|---|---|---|---|---|---|---|---|
| NO | Freq. [MHz] | Factor [dB] | Reading [dBµV] | Level [dBµV/m] | Limit [dBµV/m] | Margin [dB] | Result | Polarity | Remark |
| 1 | 2390 | 5.77 | 37.05 | 42.82 | 74.00 | 31.18 | PASS | Vertical | PK |
| 2 | 2390 | 5.77 | 24.57 | 30.34 | 54.00 | 23.66 | PASS | Vertical | AV |

| Mode: | BLE GFSK Transmitting | Channel: | 2480MHz |
|---|---|---|---|
| Remark: | 1M | | |

**Test Graph**

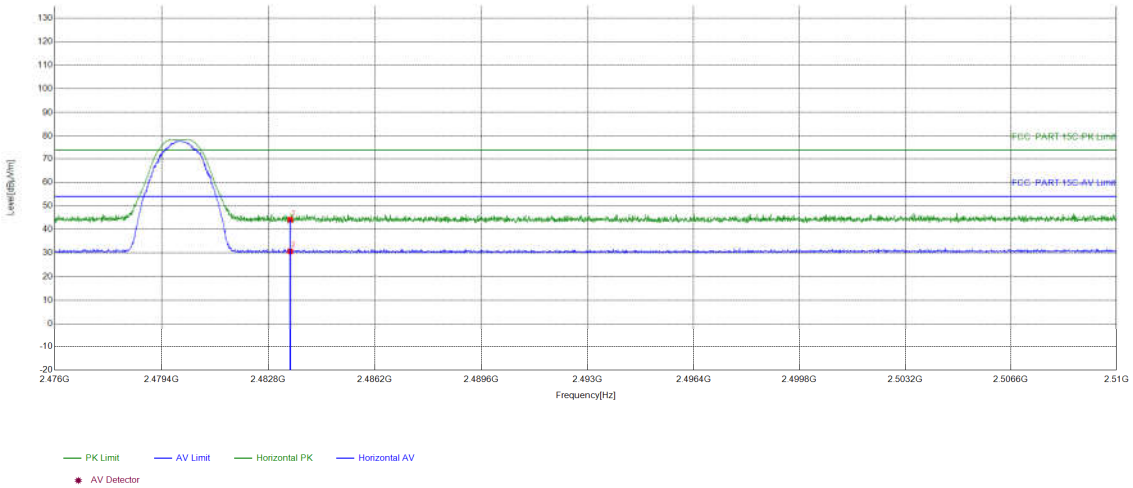


| Suspected List | | | | | | | | | |
|---|---|---|---|---|---|---|---|---|---|
| NO | Freq. [MHz] | Factor [dB] | Reading [dBµV] | Level [dBµV/m] | Limit [dBµV/m] | Margin [dB] | Result | Polarity | Remark |
| 1 | 2483.5 | 6.57 | 37.58 | 44.15 | 74.00 | 29.85 | PASS | Horizontal | PK |
| 2 | 2483.5 | 6.57 | 24.13 | 30.70 | 54.00 | 23.30 | PASS | Horizontal | AV |

| Mode: | BLE GFSK Transmitting | Channel: | 2480MHz |
|---|---|---|---|
| Remark: | 1M | | |

**Test Graph**

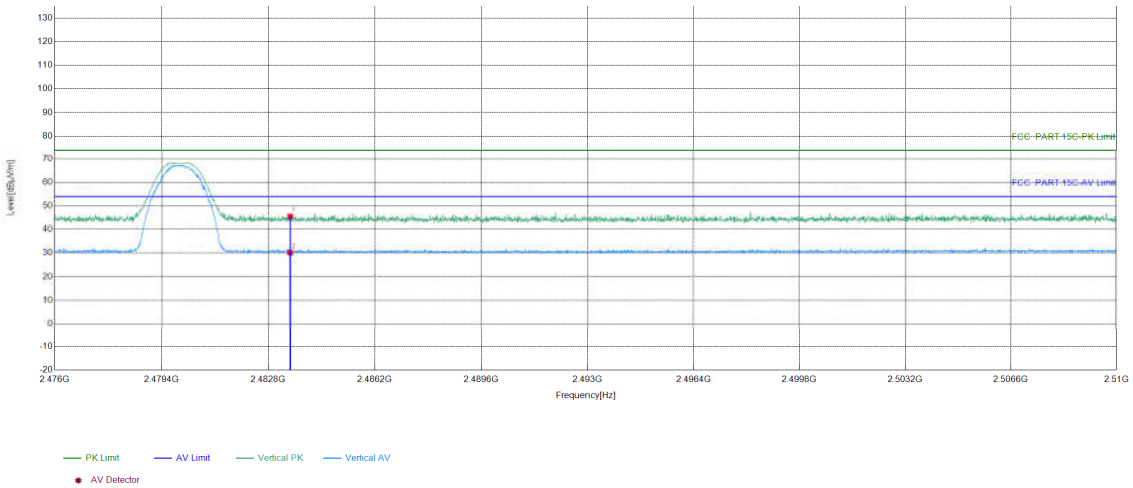


| Suspected List | | | | | | | | | |
|---|---|---|---|---|---|---|---|---|---|
| NO | Freq. [MHz] | Factor [dB] | Reading [dBµV] | Level [dBµV/m] | Limit [dBµV/m] | Margin [dB] | Result | Polarity | Remark |
| 1 | 2483.5 | 6.57 | 38.96 | 45.53 | 74.00 | 28.47 | PASS | Vertical | PK |
| 2 | 2483.5 | 6.57 | 23.61 | 30.18 | 54.00 | 23.82 | PASS | Vertical | AV |

| Mode: | BLE GFSK Transmitting | Channel: | 2402MHz |
|---|---|---|---|
| Remark: | 2M | | |

**Test Graph**

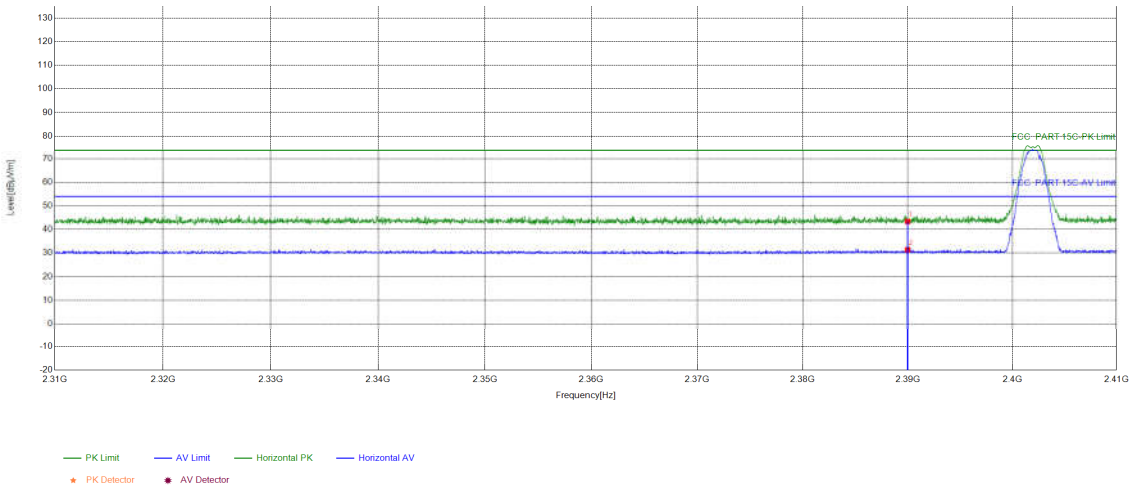


| Suspected List | | | | | | | | | |
|---|---|---|---|---|---|---|---|---|---|
| NO | Freq. [MHz] | Factor [dB] | Reading [dBµV] | Level [dBµV/m] | Limit [dBµV/m] | Margin [dB] | Result | Polarity | Remark |
| 1 | 2390 | 5.77 | 37.63 | 43.40 | 74.00 | 30.60 | PASS | Horizontal | PK |
| 2 | 2390 | 5.77 | 25.60 | 31.37 | 54.00 | 22.63 | PASS | Horizontal | AV |

| Mode: | BLE GFSK Transmitting | Channel: | 2402MHz |
|---|---|---|---|
| Remark: | 2M | | |

**Test Graph**

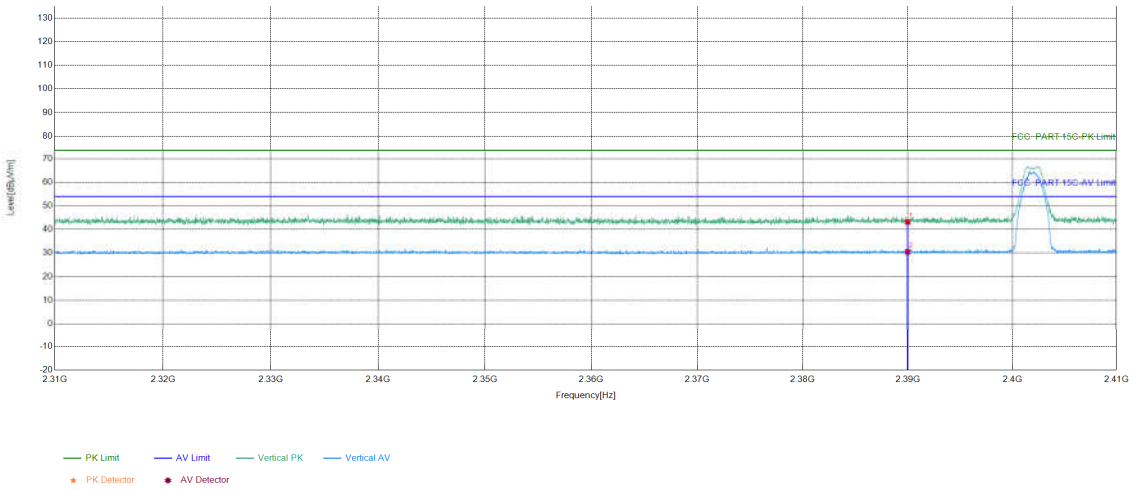


| Suspected List | | | | | | | | | |
|---|---|---|---|---|---|---|---|---|---|
| NO | Freq. [MHz] | Factor [dB] | Reading [dBµV] | Level [dBµV/m] | Limit [dBµV/m] | Margin [dB] | Result | Polarity | Remark |
| 1 | 2390 | 5.77 | 37.42 | 43.19 | 74.00 | 30.81 | PASS | Vertical | PK |
| 2 | 2390 | 5.77 | 24.70 | 30.47 | 54.00 | 23.53 | PASS | Vertical | AV |

| Mode: | BLE GFSK Transmitting | Channel: | 2480MHz |
|---|---|---|---|
| Remark: | 2M | | |

**Test Graph**

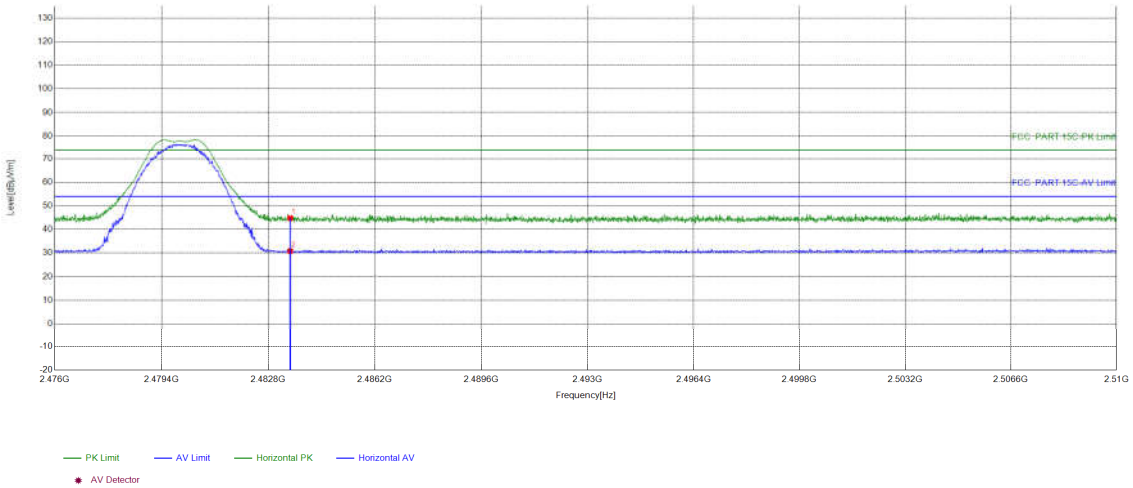


| Suspected List | | | | | | | | | |
|---|---|---|---|---|---|---|---|---|---|
| NO | Freq. [MHz] | Factor [dB] | Reading [dBµV] | Level [dBµV/m] | Limit [dBµV/m] | Margin [dB] | Result | Polarity | Remark |
| 1 | 2483.5 | 6.57 | 38.21 | 44.78 | 74.00 | 29.22 | PASS | Horizontal | PK |
| 2 | 2483.5 | 6.57 | 24.24 | 30.81 | 54.00 | 23.19 | PASS | Horizontal | AV |

| Mode: | BLE GFSK Transmitting | Channel: | 2480MHz |
|---|---|---|---|
| Remark: | 2M | | |

**Test Graph**

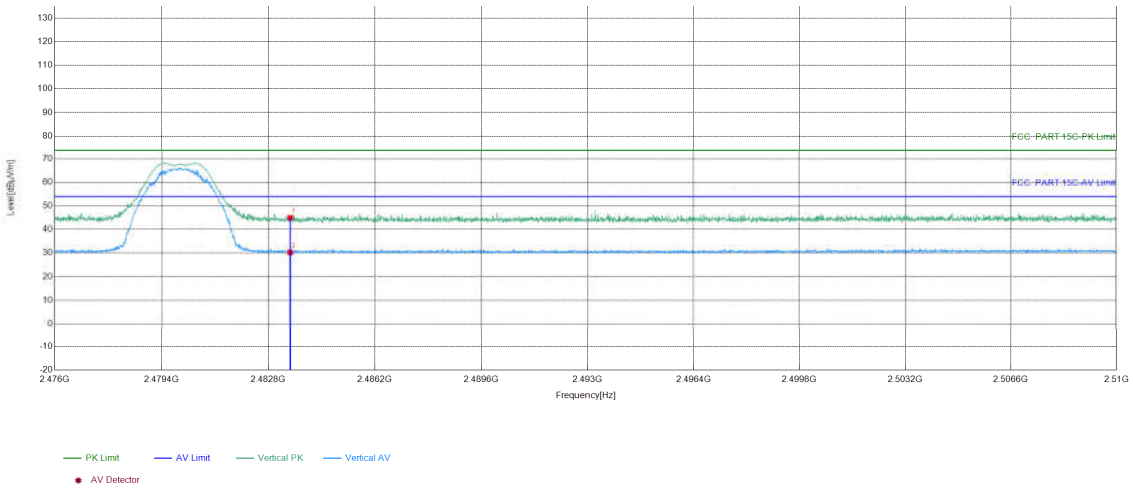


| Suspected List | | | | | | | | | |
|---|---|---|---|---|---|---|---|---|---|
| NO | Freq. [MHz] | Factor [dB] | Reading [dBμV] | Level [dBμV/m] | Limit [dBμV/m] | Margin [dB] | Result | Polarity | Remark |
| 1 | 2483.5 | 6.57 | 38.40 | 44.97 | 74.00 | 29.03 | PASS | Vertical | PK |
| 2 | 2483.5 | 6.57 | 23.71 | 30.28 | 54.00 | 23.72 | PASS | Vertical | AV |

Note:
The field strength is calculated by adding the Antenna Factor, Cable Factor & Preamplifier. The basic equation with a sample calculation is as follows:
Final Test Level =Receiver Reading -Correct Factor

Correct Factor = Preamplifier Factor– Antenna Factor–Cable Factor

# 8 Appendix BLE

Refer to Appendix: Bluetooth LE of EED32P81691801.