DHAN-T Module

DECT-ULE Platform

Datasheet

Version: 2.2

April 16, 2020

Headquarters
USA
DSP Group Inc.
161 S San Antonio Rd
Suite 10
Los Altos, CA 94022
Tel: (408)986-4300
Fax:(408)986-4323

Israel
DSP Group Ltd.
5 Shenkar Street
Herzelia, Israel 4672505
Tel: 972-9-952-9696
Fax: 972-9-954-1234

Europe
Germany
DSPG Technologies GmbH
Nelson-Mandela-Platz 18
90459 Nurnberg
Tel: +49-911-2001-0
Fax: +49-911-2001-1210

Scotland
DSPG Edinburgh Ltd.
Geddes House
Kirkton North
Livingston EH54 6GU
Tel: +44-1223-772200

APAC
China
DSP Group (HK) Limited
Unit 1-4, 11/F,
909 Cheung Sha Wan Rd.
Kowloon
Hong Kong
Tel: +852-(3965)-5888

DSP Group (Shenzhen) Limited
Room 1819, 18/F
Kerry Centre, Renminnan Road,
Shenzhen, China 518001
Tel: +(86 755) 2518 1214

Ascend Technology Inc.
Room 1303,
New World Center,
No.6009 Yitian Road,
Futian District,
Shenzhen City, China
Tel: +86-755-820-24598
Fax: +86-755-239-82986

Ascend Technology Inc.
Rm 607,
Hui Huang International Center,
1st Place, Shangdi 10th Road,
Haidian District, Beijing City, P.R.

Japan
DSP Group (Japan) Inc.
1-29-1 Nishi-Gotanda
Shinagawa-Ku Tokyo 141-0031
Tel:+81-(3)-3493-3050

Tomen Electronics
8-27, Kohnan 1 Chome,
Minato-ku, Tokyo
108-8510, Japan
Tel: +81-(3)-5462-9619
Fax: +81-(3)-5462-9686

Korea
Daesung Semiconductors
140-848, RM 401
Wonhyo BD. 46-1
Wonhyo-ro 3ka, Yongsan-gu,
Seoul, Korea
Tel: +82-(2)-3272-7300
Fax: +82-(2)-712-4632-3

India
DSP Technology Indian Private Limited
Information Technology Park
Nagawara Village Kasaba Hobli
Bangalore 560045
Tel: +91 80 4024 8399

Taiwan
Ascendtek Electronics, Inc
11F-7, No. 77, Sec. 1
Hsin Tai Wu Rd.,
Hsi Chih
Taipei Hsien,
Taiwan, R.O.C
Tel: 886-2-2698-8696
Fax: 886-2-8698-2138

This document is provided by DSP Group, Inc. and/or one or more of its subsidiaries ("DSP Group"). All information and data contained in this document is for informational purposes only, without any commitment on the part of DSP Group, and is not to be considered as an offer for a contract. DSP Group shall not be liable, in any event, for any claims for damages or any other remedy in any jurisdiction whatsoever, whether in an action in contract, tort (including negligence and strict liability) or any other theory of liability, whether in law or equity including, without limitation, claims for damages or any other remedy in whatever jurisdiction, and shall not assume responsibility for patent infringements or other rights to third parties, arising out of or in connection with this document. Further, DSP Group reserves the right to revise this publication and to make changes to its content, at any time, without obligation to notify any person or entity of such revision changes. These materials are copyrighted and any unauthorized use of these materials may violate copyright, trademark, and other laws. Therefore, no part of this publication may be reproduced, photocopied, stored on a retrieval system, or transmitted without the express written consent of DSP Group. Any new issue of this document invalidates previous issues.

DSP Group reserves the right to revise this publication and to make changes to its content, at any time, without obligation to notify any person or entity of such revision changes.

© 2020 DSP Group Confidential. All rights reserved.

TABLE OF CONTENTS

1. INTRODUCTION 5
General Description 5
Features 5
Block Diagram 5

2. PIN AND SIGNAL DESCRIPTION 6

3. MODULE ELECTRICAL SPECIFICATIONS 9
Absolute Maximum Ratings 9
Recommended Operating Conditions 9
Peak Currents and Hibernation Current 9
Transmitter 10
Receiver 10

4. ULE APPLICATION REFERENCE SCHEMATIC 11

5. INTERFACING THE DHAN-T WITH AN EXTERNAL MCU 12
RSTN Input 12
UART, SPI Interfaces 12

6. APPLICATION PCB DESIGN RECOMMENDATIONS 13

7. ASSEMBLY INFORMATION 14
Mechanical Drawing 14
PCB Footprint Detail 14
Pick & Place, Reflow 15

8. SUPPLEMENTARY INFORMATION 15
Labeling (attached to the module shield) 15
Handling Guidance 15
IPEI and EMC 16
Ordering Information 16
Change Log 17

1. Introduction

General Description

The DSPG DHAN-T module is based on the state-of-the-art DHX101 - a 4th generation DECT SOC. The DHAN-T module is well suited for all DECT and ULE Device applications. The DHAN-T SW stack includes standard DECT-ULE MAC-PHY connectivity as well as HAN-FUN (= the ULE Alliance Standard) functionality for Dual-Mode (data and audio) ULE. The Application SW written by the customer typically runs DHX101 within the DHAN-T. However the application Host can also run on external MCU which communicates with the DHAN-T via a UART interface.

Features

- Excellent radio performance, with over 119dB system gain
- A printed antenna is included in the module
- Radio covers all regional DECT bands. A simple re-configuration of the EEPROM is required
- Radio is fully compliant with ETSI DECT and ULE standards. Regulatory (EU, FCC) certification is pending
- Compact module with dimensions 27.2x16.9x3.3mm (including the RF shield height)
- Minimized external BOM
- Operating Temperature spanning -40ºC to 85ºC

Block Diagram

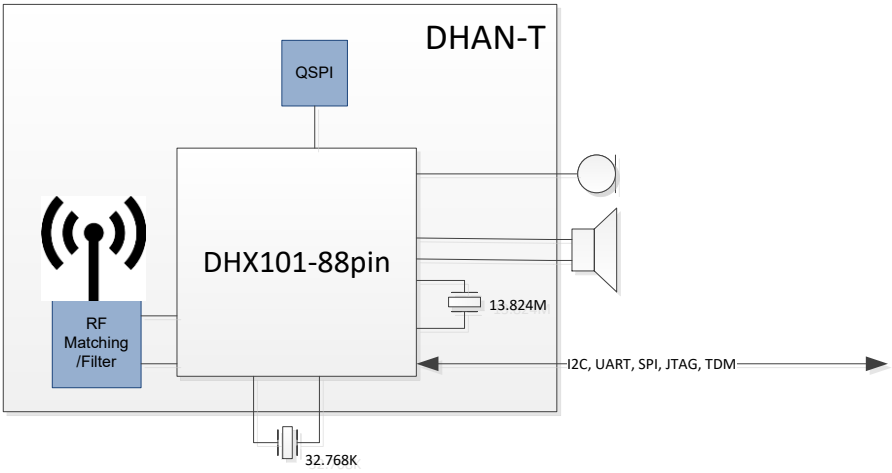

DHAN-T Module Block Diagram

2. Pinout and Signal Description

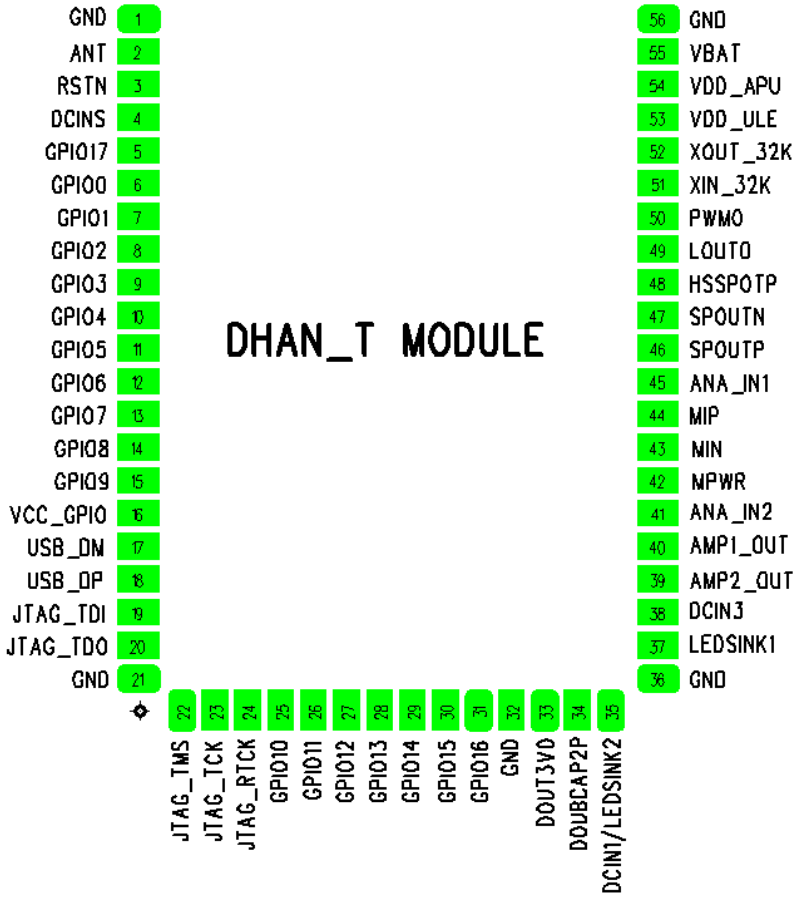

PIN NO.	NAME	DESCRIPTION/TYPE
1	GND	GND
2	ANT	Diversity Antenna. Leave unconnected
3	RSTN	For standalone operation, shunt this pin to GND with 100nF. For an application running on an external MCU, this pin should be connected to a Host MCU IO and used to reset the DHAN-T
4	DCINS	Leave as not connected (NC)
5	GPIO17	
6	SCL (GPIO0)	GPIO or I2C Clock. Open Drain, reset value is floating. Leave as not connected if not used
7	SDA (GPIO1)	GPIO or I2C Data. Open Drain, reset value is floating. Leave as not connected if not used
8	GPIO2	GPIO or TDM_TXD
9	GPI03	GPIO or TDM_RXD
10	GPIO4	GPIO or TDM_FSYNC
11	GPIO5	GPIO or TDM_FSYNC
12	GPIO6	GPIO or SPI Data In. Leave as not connected if not used
13	GPIO7	GPIO or SPI Data Out. Leave as not connected if not used
14	GPIO8	GPIO or SPI Clock
15	GPIO9	GPIO or UART Rx or SPI Chip Select
16	VCC_GPIO	Input. Sets the IO Logic level at the module interface at 1.8 or 3V
17	USB_DM	
18	USB_DP	
19	TDI	JTAG Data In. Should be connected to TP
20	TDO	JTAG Data Out. Should be connected to TP
21	GND	
22	TMS	JTAG Mode Select. Should be connected to TP
23	TCK	JTAG Clock. Should be connected to TP
24	RTCK	JTAG Reset. Should be connected to TP
25	GPIO10	GPIO or UART Rx or UART Tx
26	GPIO11	GPIO or UART Tx
27	GPIO12	GPIO
28	GPIO13	GPIO
29	GPIO14	GPIO
30	GPIO15	GPIO

PIN NO.	NAME	DESCRIPTION/TYPE
31	GPIO16	GPIO
32	GND	
33	DOUT3V0	3V (Doubler) Output. While DHAN-T is hibernating, this pin is either in tristate (default SW configuration) or pulled to GND. Can be used in conjunction with GPIO7&8 above to drive an LED or button during non-hibernation modes
34	DOUBCAP2P	Pull down with 1M resistor
35	LEDSINK2/DCIN1	ULE I/O. If not used, can be left NC
36	GND	GND
37	LEDSINK1/PWM	
38	DCIN3	ADC input used to monitor power supply input
39	AMP2_OUT	ULE I/O. Typically used (as input) to wake up the DHAN-T from hibernation
40	AMP1_OUT	ULE I/O. Typically used (as output) to indicate DHAN-T is active (logic high)
41	ANA2_IN	ULE I/O. During hibernate, Logic High should not be applied to this pin (it can result in leakage current). If not used, can be left NC
42	MPWR	Microphone Power
43	MIN	If not used, can be left as NC
44	MIP	If not used, can be left as NC
45	ANA_IN1	ULE I/O. If not used, can be left NC
46	SPOUTP	Speaker Output, Positive
47	SPOUTN	Speaker Output, Negative
48	HSSPOTP	Headset Speaker Out, Positive
49	LOUT	Headset Speaker Out, Negative
50	PWM0	Analog Output
51	XIN_32K	Connect to 32.768 XTAL
52	XOUT_32K	Connect to 32.768 XTAL
53	VDD_ULE	1.8V output. Active during hibernate. Can be used to power VCC_GPIO (Pin16)
54	VDD_APU	1.8V Test Point. Leave NC
55	VBAT	Power Supply Input. Connect to Battery or regulated 3V supply
56	GND	GND

3. Module Electrical Specifications

Unless otherwise noted, all specifications are for 25ºC.

Absolute Maximum Ratings

Minimum Voltage Applied to all pins: -0.3V
Maximum Voltage Applied to all pins: +4.6V
Storage Temperature Range: -45 to 90ºC

Note: Functionality at or above these limits is not implied. Exposure to absolute maximum ratings for extended periods may affect device reliability.

Recommended Operating Conditions

Table 3-1: Recommended Operating Conditions

RATING	CONDITIONS	MIN	TYP	MAX	UNIT
Operating ambient temperature		-40	+25	+85	°C
VBAT		1.95	3.0	3.6	V
All GPIOs Condition: VCC_GPIO is 3V	VIL VIH VOL VOH	 2.0 2.4		0.8 0.4	V
All GPIOs Condition: VCC_GPIO is 1.8V	VIL VIH VOL VOH	 1.17 1.35		0.63 0.45	V
RSTN	VIL VIH	 0.6*VBAT		0.3*VBAT	V
DCIN3		1.95	3.0	VBAT	V

Peak Currents and Hibernation Current

VBAT=3V

PARAMETER	TEST CONDITIONS	TYP	MAX	UNIT
Tx Current	Band=EU @ 23dBm	400	480	mA
Tx Current	Band=US @ 21dBm	250	300	mA
Rx Current	Max Gain Setting	125	135	mA
Paging Current	1s response latency	90		µA
Hibernation Current		2		µA

Transmitter

VBAT=3V

Table 3-2: Tx Characteristics

CHARACTERISTICS	TEST CONDITIONS	MIN	TYP	MAX	UNIT
NTP	Band=EU	21.5	23	24	dBm
NTP	Band=US	19	20	21	dBm
Harmonics	Band=EU & US		-40	-35	dBm
Transmission Mask	EN 301406 Paragraph 5.3.3		Comply		N/A
Frequency Offset	EN 301406 Paragraph 5.3.1	-50	8	+50	KHz
Frequency Drift	EN 301406 Paragraph 5.3.5	-15	0	+15	KHz/Slot
Emission Due Modulation	EN 301406 Paragraph 5.3.6.2 M±1 M±2 M±3 M>±3		 -20 -42 -47 -50	 -8 -30 -40 -44	dBm

Receiver

VBAT=3V

Table 3-3: Rx Characteristics

CHARACTERISTICS	TEST CONDITIONS	MIN	TYP	MAX	UNIT
Sensitivity, BER < 1000ppm	EU Band		-96	-93	dBm
Maximum input power	EU Band			15	dBm

4. ULE Application Reference Schematic

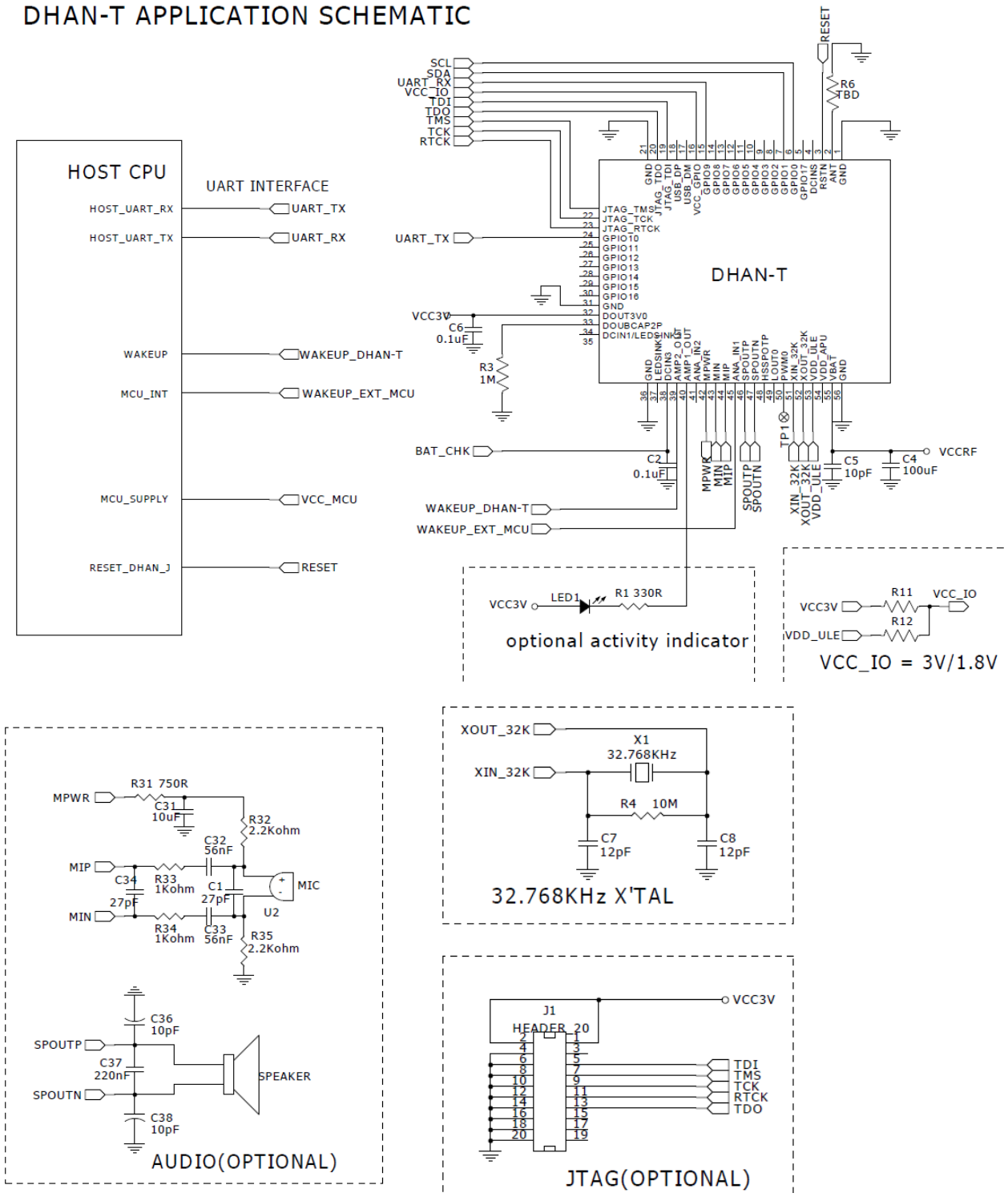

5. Interfacing the DHAN-T with an external MCU

RSTN Input

At power-up, the Application Host on the external MCU should hold this pin (Pin 3) at logic Low until it is ready to establish communication (via UART) with the DHAN-T. When ready, the App Host should apply a rising edge (and leave at Logic High) and wait for the “Hello” indication from the DHAN-T. If at some point later on the MCU cannot communicate with the DHAN-T, it should apply a low going pulse of >100uS to reset the DHX101 on the DHAN-T. Note that the RSTN pin is powered by the VBAT power domain. The minimum Logic High level is 0.6*VBAT.

UART, SPI Interfaces

Applications requiring a UART I/F and an SPI interface (eg, SmartVoice ULE applications), will map the former to GPIOs 10 and 11 (Rx, Tx respectiveky) and the latter to GPIOs 6-9. Where only the UART I/F is required (as in the Reference Schematic provided above), UART Rx is assigned to GPIO9 and Tx to GPIO10.

6. Application PCB Design Recommendations

It is recommended that unused pads on the Application PCB not be left as isolated islands of copper but rather be anchored with via to inner layers of the PCB. It is also recommend that GND vias be applied liberally in the vicinity of GND pins 1, 21, 36 and 56.

The following layout recommendations for embedding the DHAN-T on the Application Board:

1. Implement a solid ground under the DHAN-T module
2. Do not route signal traces under the module. Use the bottom layer for signal routing
3. Locate the antenna on the edge of the PCB
4. Release from GND on all layers under the DHAN-T antenna

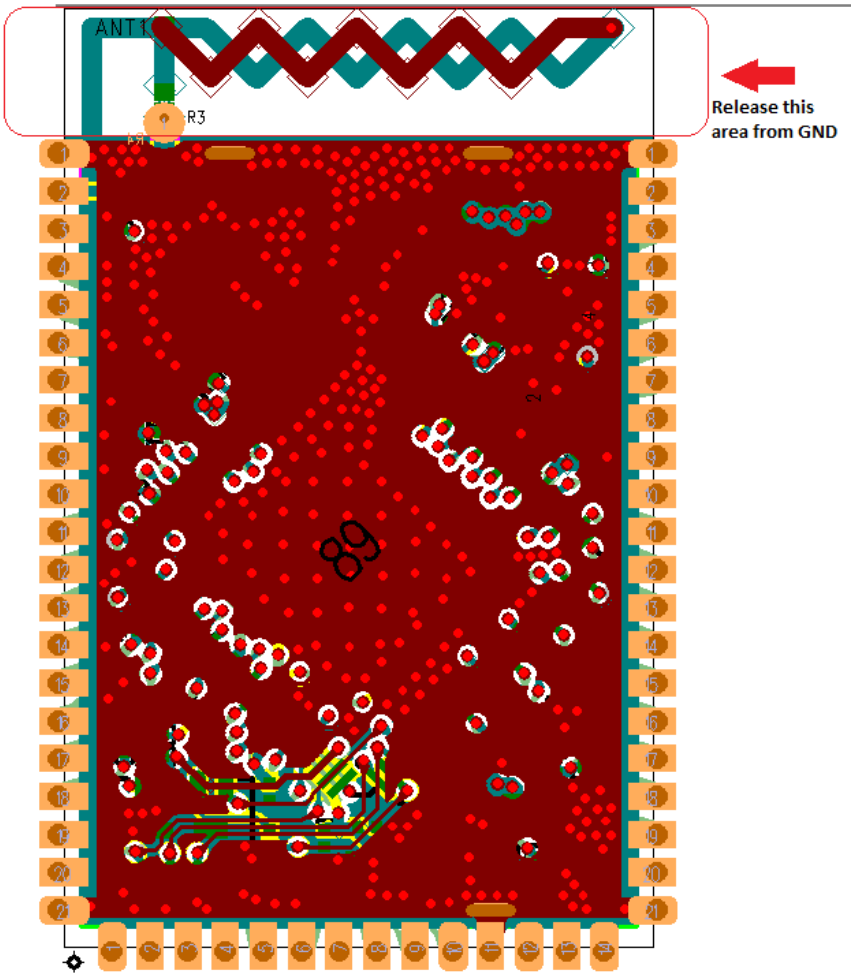

7. Assembly Information

Mechanical Drawing

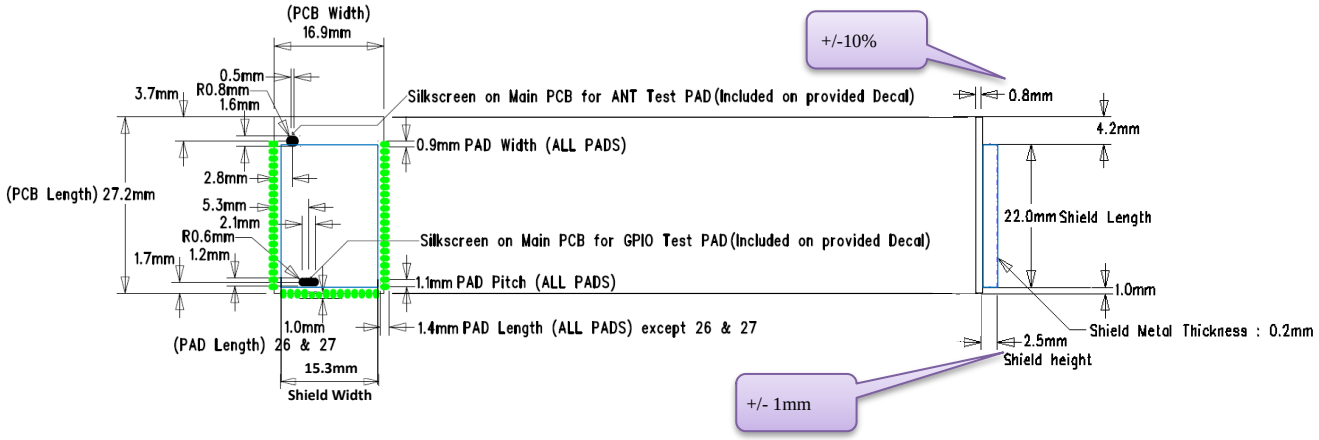

PCB Footprint Detail

For an electronic version of this footprint, download from here

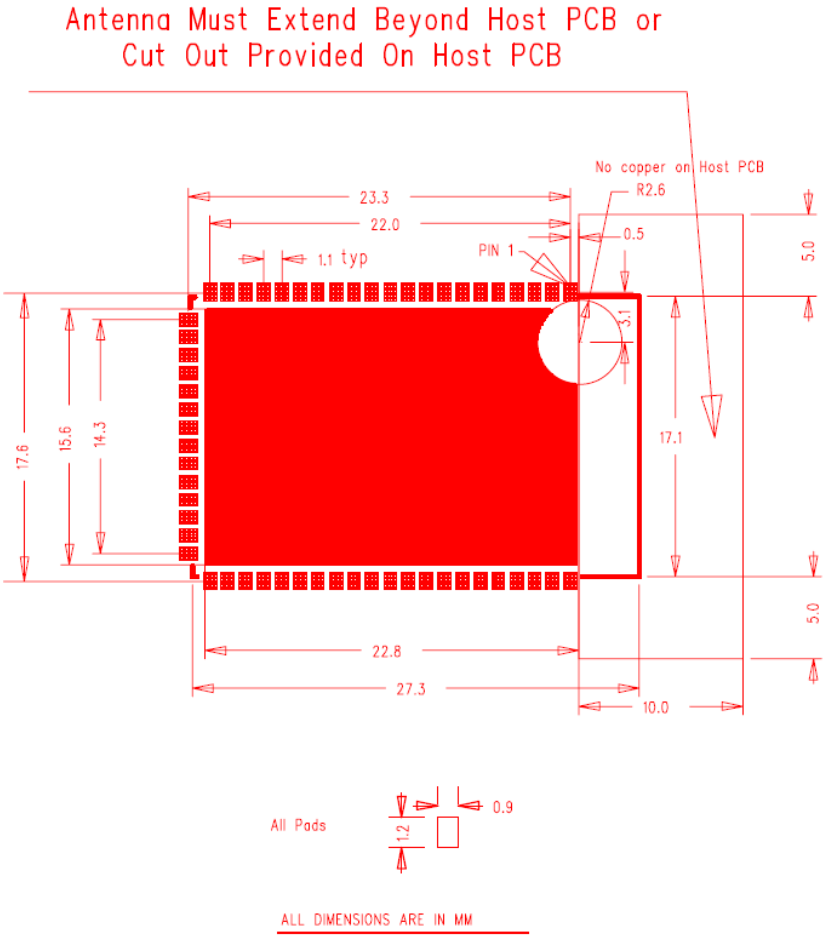

Pick & Place, Reflow

The DHAN-T module uses a flat shield cover to facilitate a fully automatic assembly process. For backing and reflow recommendations, use MSL 3 in the JEDEC/IPC standard J-STD-20b. The temperature classification (TC) for the module is 245° C.

8. Supplementary Information

Labeling (attached to the module shield)

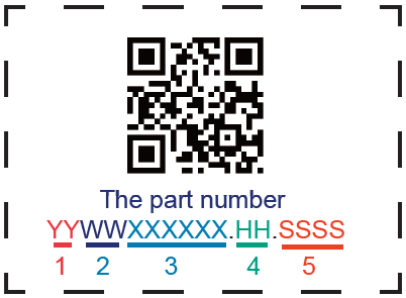

1) Year
2) Week
3) 6-digit serial #
4) HW version
5) SW version

Handling Guidance

This module includes highly sensitive electronic circuity. Handling without proper ESD protection may damage the module permanently.

IPEI and EMC

Each DHAN-T Module is shipped to the customer with a unique IPEI – its DECT identity.

DHAN-T will ship with an “EMC” of 0xFEB. This is the DSP Group “generic” EMC. The EMC setting identifies a Device as belonging to a specific group of ULE Devices/Hubs that utilize some proprietary signaling.

In either case, the customer is free to re-program these parameters.

Ordering Information

Part #: DHX101MDMDFDA0AMI

Change Log

Table 8-1: List of Changes

REVISION	DATE	DESCRIPTION
1.1	June 4, 2018	Baseline release
1.2	August 8, 2018	Update PCB files
2.0	May 27, 2019	*Account for migration to DHX101, FW D (Part #, Block Diagram, paging idle current drain) *Clarifications to, VCC_IO RSTN (pinout description, drive by external MCU) *Clarifications to TDM, SPI mapping to GPIO *Added Reference Schematics
2.1	June 3, 2019	*Add detail PCB footprint drawing
2.2	April 16, 2020	*Clarify in Module Description that dimensions given are for the module itself, not the PCB footprint recommended for mounting the module *Replaced pinout diagram with more legible pin labels *Corrected JTAG TDO and TMS pin numbering in the tabulation. Now matches the diagram *Added labeling description *added tolerances to shield height and PCB thickness dimensions

IC Warning

This device complies with Industry Canada licence-exempt RSS standard(s). Operation is subject to the following two conditions:

(1) This device may not cause interference, and

(2) This device must accept any interference, including interference that may cause undesired operation of the device.

The modular can be installed or integrated in mobile or fix devices only. This modular cannot be installed in any portable device.

IC Radiation Exposure Statement

This modular complies with IC RF radiation exposure limits set forth for an uncontrolled environment. This transmitter must not be co-located or operating in conjunction with any other antenna or transmitter. This modular must be installed and operated with a minimum distance of 20 cm between the radiator and user body.

For a host manufacture's using a certified modular, if (1) the module's IC number is not visible when installed in the host, or (2) if the host is marketed so that end users do not have straightforward commonly used methods for access to remove the module so that the IC number of the module is visible; then an additional permanent label referring to the enclosed module: "Contains Transmitter Module IC: " 23573-DHANTT " or "Contains IC: 23573-DHANTT" must be used.

Le présent appareil est conforme aux CNR d'Industrie Canada applicables aux appareils radio exempts de licence. L'exploitation est autorisée aux deux conditions suivantes:

(1) l'appareil ne doit pas produire de brouillage, et

(2) l'utilisateur de l'appareil doit accepter tout brouillage radioélectrique subi, même si le brouillage est susceptible d'en compromettre le fonctionnement

Le modular peut être installé ou intégré dans un mobile ou réparer une seule chose Installation dans n’importe quel appareil portable.

Déclaration de rayonnement IC

Ce modular complies avec des radiations émettrices de rayonnement Environnement. Ceci ne doit pas être co-localisé ou opérer avec des autres Ce modular doit être installé et obtenu avec une distance minimale de 20 cm entre les radiateurs et le corps de l’utilisateur.

Pour un hôte, on utilise un modular, si (1) le numéro de module est non visible Quand on est installé dans le serveur, or (2) si le propriétaire est commercialisé Straightforward commonly used for the access to remove travail so that the number IC en vue Le module est visible;Ensuite, le label permanent a été attribué au module: "Contient le Module IC:" 23573-DHANTT" ou "contenu IC: 23573-DHANTT" doit" be used.

FCC Statement

This device complies with part 15 of the FCC Rules. Operation is subject to the following two conditions:

(1) This device may not cause harmful interference, and

(2) this device must accept

any interference received, including interference that may cause undesired operation.

Any Changes or modifications not expressly approved by the party responsible for compliance could void the user's authority to operate the equipment.

If the FCC identification number is not visible when the module is installed inside another device, then the outside of the device into which the module is installed must also display a label referring to the enclosed module. This exterior label can use wording such as the following: “Contains Transmitter Module FCC ID: 2AYEN-DHANT Or Contains FCC ID: 2AYEN-DHANT”

When the module is installed inside another device, the user manual of the host must contain below warning statements;

1. This device complies with Part 15 of the FCC Rules. Operation is subject to the following two conditions:

(1) This device may not cause harmful interference.

(2) This device must accept any interference received, including interference that may cause undesired operation.

2. Changes or modifications not expressly approved by the party responsible for compliance could void the user's authority to operate the equipment.

The devices must be installed and used in strict accordance with the manufacturer's instructions as described in the user documentation that comes with the product.

Any company of the host device which install this modular with Single modular approval should perform the test of radiated emission and spurious emission according to Title 47 of the CFR, Part 15 Subpart D requirement, Only if the test result comply with Title 47 of the CFR, Part 15 Subpart D requirement， then the host can be sold legally.

General Statements

(1)Module use PCB antenna, the maximum gain is 0dBi.

(2)Any change of antenna type is not allowed,module only use PCB antenna.

(3)Host containing modules must comply with FCC Rule requirements.

RF Exposure

This equipment complies with radiation exposure limits set forth for an uncontrolled environment. This equipment should be installed and operated with Maximum distance 20 cm between the radiator and your body. This transmitter must not be co-located or operating in conjunction with any other antenna or transmitter.

Cet équipement est conforme aux limites d'exposition aux radiations dans un environnement non controlé. Cet équipement doit être installé et utilisé à distance minimum de 20 cm entre le radiateur et votre corps. Cet émetteur ne doit pas être co-localisées ou opérant en conjonction avec tout autre antenne ou transmetteur.”

CE Maintenance

1.EUT Operating temperature range: -40° C to 85° C .

2.The device complies with RF specifications when the device used at 0mm from your Limbs.

3.To prevent possible hearing damage. Do not listen at high volume levels for long periods.

Declaration of Conformity
DSP Group Ltd. hereby declares that this DECT Phone is in compliance with the essential requirements and other relevant provisions of Directive 2014/53/EU.In accordance with Article 10(2) and Article 10(10),This product is allowed to be used in all EU member states.

CE

DSP Group Ltd.

EU DECLARATION OF CONFORMITY

in accordance with
Annex VI of Directive 2014/53/EU of the European Parliament and of the Council

1. For the following Radio equipment:
Product: DHAN-T
Model: DHAN-T

Tradename or Brand: DSP GROUP
Software / Hardware number: 02 / 01

Power Rating: DC 3V

2. Name and address of the manufacturer or his authorised representative:
Manufacturer: DSP Group Ltd.
Add: 3 Arik Einstein Street., Herzeliya 4659071 Israel

3. This declaration of conformity is issued under the sole responsibility of the Manufacturer.

4. Object of the declaration (identification of the radio equipment allowing traceability; it may include a colour image of sufficient clarity where necessary for the identification of the radio equipment):

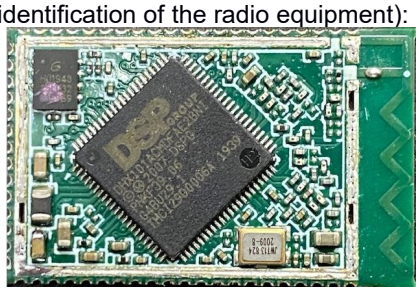

5. The object of the declaration described above is in conformity with the relevant Union harmonization legislation:
Directive 2014/53/EU (RED)

6. References to the relevant harmonised standards used or references to the other technical specifications in relation to which conformity is declared:

Article 3.2: ETSI EN 301 406 V2.2.2 (2016-09);
Article 3.1b: ETSI EN 301 489-1 V2.2.3 (2019-11)
ETSI EN 301 489-6 V2.2.1 (2019-04)
Article 3.1a Health: EN 50665: 2017

Article 3.1a Electrical Safety: EN 62368-1:2014/A11:2017

7. Notified Body Name: MET Laboratories, Inc.

Notified Body Number: 0980
Notified Body Assessment Performed: Module B/C on Article 3.1a, 3.1b, 3.2 and 3.3
Technical File Identification Number: N/A

8. Where applicable, description of accessories and components, including software, which allow the radio equipment to operate as intended and covered by the EU declaration of conformity: User instructions are provided in the User Manual. The Software and Hardware versions are specified above.

9. Additional information:
Referring to Article 10.2 of the Directive, this equipment is so constructed that it can be operated in all Member States, without infringing applicable requirements on the use of radio spectrum.
Referring to Article 10.10 of the Directive, there are no restrictions on putting this equipment intoservice or of requirements for authorisation of use. Please refer to the User Manual for details.

On behalf of:

Manufacturer: DSP Group Ltd.
Add: 3 Arik Einstein Street., Herzeliya 4659071 Israel

(place and date of issue): Herzeliya, 2021-01-12

(name, function): ……Tal Ben-Zvi Quality Manger……

(signature): .....