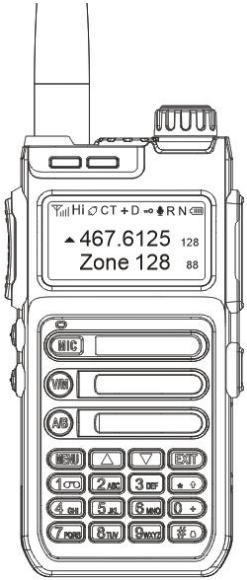

- *Dual-RX*
- *Dual-Band*
- *Dual-Watch*
- *Dual-Display*
- *MICRO USB Charging*
- *DTMF Selective Calling*
- *Channel Scan/Memory Scan*
- *Wide viewing angle LCD Screen*

USER'S MANUAL

Preface

Thank you for buying the company's products。

This product offers latest design, enhanced features, solid performances and easy accessibility. We believe you will be pleased with the high quality and reliable features for all your communication needs. This manual includes functional descriptions and step-by-step instructions. It also includes troubleshooting guides. If the body is damaged due to incorrect operation, please read the safety information manual carefully before use.

Disclaimer

The accuracy and completeness of the contents are sought in the process of compilation, but we do not bear any responsibility for the possible errors or omissions. With the continuous development of technology, we reserve the right to change the design and specification of the product without notice. This manual may not be reproduced, modified, translated or transmitted in any form without the prior written authorization of the company.

The third party products and contents involved in this manual belong to the third party. Our company does not guarantee its accuracy, effectiveness, timeliness, legality or integrity.

Highlight Function

-Fast scan frequency and radios pairing

-Up to 128 named memory channels.

-Manual input frequency and programming

-DTMF encoding/Decoding

-128-64 full dot matrix wide viewing angle LCD screen

-Twin band simultaneous receiving (U-U,U-V,V-U,V-V)

Main Features

-Frequency range: 136-174MHz/400-470MHz (Rx) 144-148MHz (Tx) 420-450MHz (Tx)

-Friendly man-machine interface, easier to operate

-Dual-band, dual-display, dual-watch

-High / Middle /Low (5W/2W/1W) power selectable

-Emergency alarm and ANI identification through DTMF

-Equipped with the relay pilot and scramble function

-High Capacity Lithium-Ion battery

-Broadcast FM radio receiver 65-108MHz

-MICRO USB charging, battery life is more convenient

-CTCSS/DCS Scan，channel scan

-CTCSS/DCS, DTMF signaling

-SOS emergency alert function

-Voice Operated Transmit (VOX)

-Priority scan, priority channel setting

-LED flashlight

-Programmable repeater offset

-PC programming (frequency reading and writing frequency) will be password protected

-Frequency step, selectable between2.5K | 5.0K | 6.25K | 10.0K | 12.5K | 20.0K | 25.0K | 50.0K

Table of Contents

Chapter 1. Getting started……
1. Packing List……
2. Assembly……
2.1 Antenna……
2.2 Belt clip……
2.3 Battery……
2.4 Charging and battery maintenance……
3. Getting to know your radio……
3.1 Radio Controls and Indicators……
3.2 Reading the display……
3.3 Status LED……
3.4 The main keys……

Chapter 2. Basic Operations……
2.1 Power and volume……
2.2 Making a call……
2.3 Channel selection……
2.4 Frequency (VFO) mode……
2.5 Channel (MR) mode……

Chapter 3. Advanced Operations……
3.1 Working the menu system……
3.2 Scanning……
3.3 Fast scan frequency and pairing……
3.4 Dual watch……
3.5 CTCSS, DCS and Tone-burst……
3.6 DTMF……
3.7 DTMF call……
3.8 FM Radio……
3.9 VOX……
3.10 Special DCS……
3.11 Manual programming……

Chapter 4. Product Safety Guide……

Appendix A. - Troubleshooting……
Appendix B. - Technical Specifications……
Appendix C. - Menu definitions……
Appendix D. - CTCSS Table……
Appendix E. - DCS Table……

Chapter 1. Getting started

1. Packing List

Please unpack carefully and check that you have received the following items. If any item is missing or damaged, please contact your dealer.

Item	Quantity(PCS)	Item	Quantity(PCS)
Radio	1	Antenna	1
Belt Clip	1	Wrist Strap	1
Charging Cradle	1	Documentation Kit	1
AC-DC Charging Adapter	1	Lithium Ion Poly Battery	1

The frequency band is marked on the label of antenna; if it is unavailable there; see the label on the radio.

2. Assembly

Before the radio is ready for use we need to attach the antenna and battery pack, as well as charge the battery.

2.1 Antenna

This transceiver is fitted with a Male SMA connector. To mount your antenna (Female SMA Connector), align the two connectors and turn clockwise until it stops.

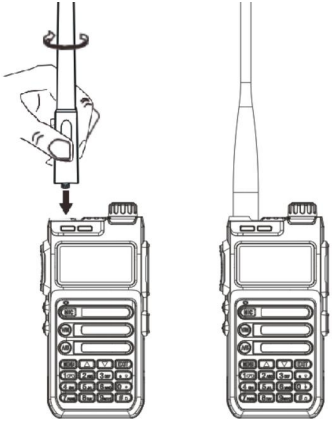

NOTE

- Do not over-tighten your antenna to avoid damage to the connectors.
- When installing the antenna, don't grip it by the top. Grip by the base and turn.
- Do not hold the antenna with your hand or wrap the outside of it to avoid bad operation of the transceiver.
- Never transmit without an antenna.

2.2 Belt clip

At the back of the radio there are two parallel screws mounted above the battery, remove these and thread

them through the holes on the belt clip as you screw them back into the radio body.

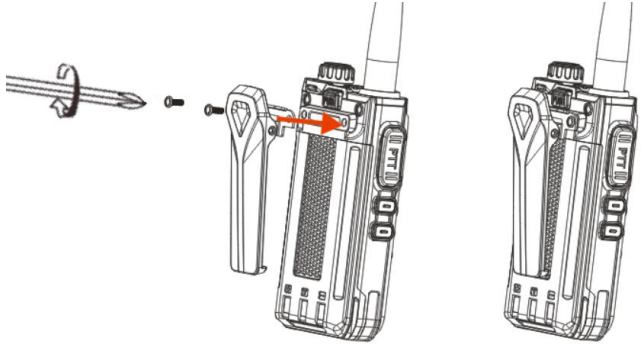

NOTE

Do not use any form of glue to fix the screws on the battery clip. The solvents in the glue may cause damage to the battery casing.

2.3 Battery

Before attaching or removing the battery make sure your radio is turned off by turning the power/volume knob all the way counter-clockwise.

■Installation

Make sure the battery is aligned in parallel with the radio body with the lower edge of the battery about 1-2cm below the edge of the radio.

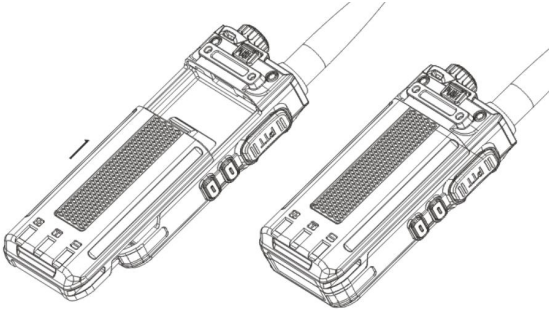

NOTE

Once aligned with the guide-rails, slide the battery upward until you hear a click as the battery locks in place.

■Removal

To remove the battery, press the battery release above the battery pack, as you slide the battery downward.

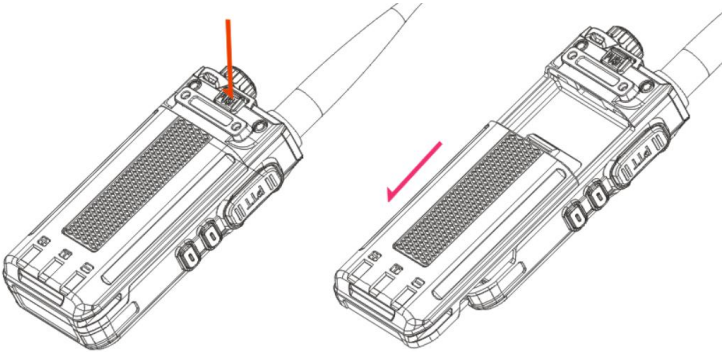

2.4 Installing the Additional Speaker/Microphone (Optional)

Pry open the rubber MIC-Headset jack cover and then insert the Speaker / Microphone plug into the double jack.

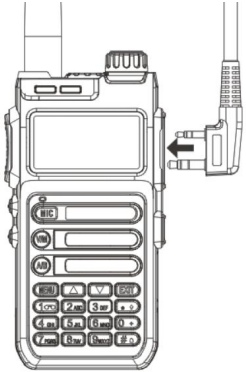

2.5 Charging and battery maintenance

■Charging

NOTE

Battery should be fully charged before initial use. Optimum battery efficiency will be achieved after the three full battery charge and discharge cycles.

Follow these steps to hook up and use the charger:

1. Plug the DC connector of the power adaptor into the charger base.

2. Plug the AC connector of the power adaptor into a main AC wall outlet.

3. Place the radio in the charging slot on the charger.

4. Make sure the radio is making contact with the charger. When the red LED comes on steady, your radio is charging.

5. The radio is fully charged once the charger's green status LED goes steady. Please remove the radio at that time to avoid over-charging your battery.

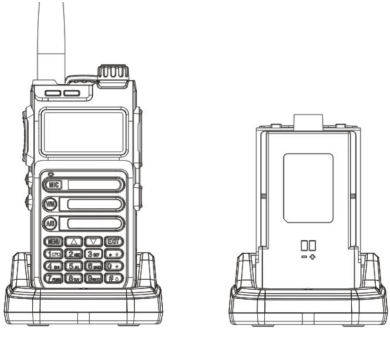

To determine the charging status, check the light-emitting diode (LED) indicator on the charger according to the following table:

Charging Indicator	Charging Status
Glows red	The battery is charging.
Glows green	The battery is fully charged.
Flashes red rapidly	The battery fails to be charged.

NOTE

The charger and battery are fitted with matching notches so that you can charge your battery on its own!

Practical if you have two batteries. That way you can charge one battery while still using your radio.

Radio should be turned OFF during charge cycle.

Press and hold the [0] key to display the battery voltage.

■Lithium Ion Battery Warning

This equipment contains a rechargeable Lithium Ion battery. The rechargeable Lithium Ion battery contained in this equipment may explode if disposed of in a fire.

- Never attempt to disassemble your battery pack.
- Do not short-circuit the battery.
- Use only batteries approved by the original manufacturer.
- Do not charge the rechargeable battery used in this equipment in any charger other than the one specified in the owner's manual. Using another charger may damage the battery or cause the battery to explode.
- The battery for your radio comes uncharged from the factory; Please let it charge for at least four to five hours before you start using your radio.

Lithium Ion battery must be recycled or disposed of properly.

Avoid exposing the battery (whether attached to the radio or not) to direct sunlight, heated cars, or temperatures below -4° F (-20° C) or above +140° F (+60° C). Exposing the chemical contained within the battery pack to temperatures above +140° F (+60° C) may cause the battery to rupture, fail, or reduce performance.

In case of exposure to the cell contents, wash the affected area thoroughly, and seek medical attention.

■Storage

Partially charge your battery before long-term storage in order to prevent damage from over- discharge. While lead acid must always be kept at full charge during storage, this radio uses a lithium-based battery and should be stored at around a 40 percent charge. This level minimizes age-related capacity loss while keeping the battery in operating condition and allowing self-discharge.

To avoid severe capacity degradation of your battery while in long-term storage, please cycle the battery at least every six (6) months.

Store your batteries in a cool and dry place, never above normal room temperatures.

RBRC INFORMATION

As part of our commitment to protect the environment and conserve natural resources, our voluntarily participates in an RBRC® industry program to collect and recycle used Li-Ion batteries within the US.

Please call 1-800-8-BATTERY for information on Li-Ion battery recycling in your area.

(RBRC® is a registered trademark of the Rechargeable Battery Recycling Corporation.)

3. Getting to know your radio

3.1 Radio Controls and Indicators

Figure 1.3.1. Radio Controls and Indicators

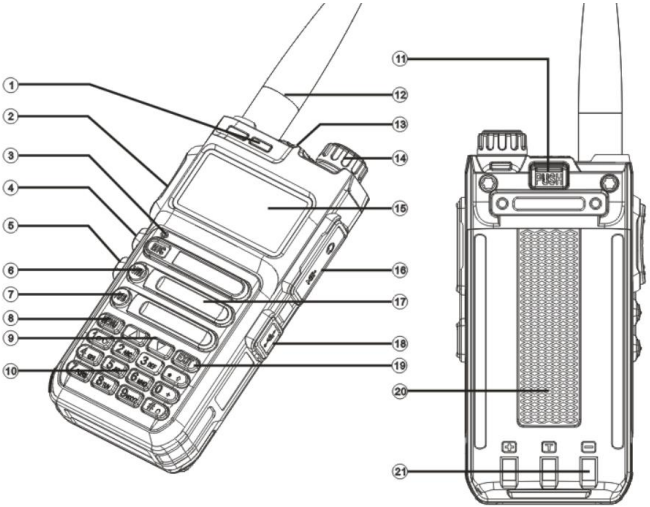

Table 1.3.1 Radio controls and indicators

1. Status LED	2. PTT key	3. Microphone	4. Side key2 (PF2)
5. Side key3 (PF3)	6. VFO/MR mode key	7. A / B select key	8. MENU function key
9.UP/DOWN Navigation key	10. Numeric keypad	11. Battery release latch	12. Antenna
13. Flashlight	14. Power / Volume knob	15. Dual band LCD	16. Accessory jack
17. Speaker	18. MICRO USB charge jack	19. EXIT key	20. Battery pack
21. Battery contacts			

3.2 Reading the display

The LCD display shows different information depending on what you are doing. This sample screen shows some of this information. The following table shows all the possible icons and what they mean.

Figure1.3.2. Reading the display

Table 1.3.2. Display icons and what they mean

Icon	Description	Icon	Description
	Squelch Open/ Close Indicator		
	Battery level indicator	D	Dual watch enabled
	VOX enabled	N	Narrowband enabled
	The keys are locked.	+	TX will be shifted higher in frequency than RX
	Indicates active band or channel	-	TX will be shifted lower in frequency than RX
DCS	DCS enabled	CT	CTCSS enabled
10/2	Current channel number	R	Reverse function enabled
467.6125	Current channel frequency	Zone16	Current channel name
	This icon appears when DTMFST is set to DT-ST/ANI-ST/ DT+ANI	Hi/Mi/Lo	The transmitter power is set to Hi (5W), Mi (2.5W) or Lo (1W).

3.3 Status LED

The status LED has a very simple and traditional design. When you receive a signal it turns green, when you transmit it turns red, and it's off in standby.

LED Indicator	Radio Status
Glows red	Transmitting.
Glows green	Receiving.

3.4 The maim keys

■Side key 2 –SK2 (Flashlight and alarm)

Press [SK2] momentarily to turn on the LED flashlight. Another momentary press will flash the LED. Another momentary press turns the flashlight off.

Press and hold [SK2] to activate the alarm function. Press (a short press) again to turn it off.

■Side key 3–SK3 (Broadcast FM and Monitor)

Press [SK3] momentarily to start the broadcast FM receiver. Another momentary press turns the broadcast FM receiver off. If a signal is received on the active frequency or channel while you are listening to the broadcast FM, the receiver will open squelch to that frequency (as if scanning) and remain there until the signal goes away; it will then switch back to broadcast FM.

Press and hold [SK3] to monitor the signal. This will open up the squelch so you can listen to the unfiltered

signal.

■V/M(VFO / MR) mode key

Press [V/M] switches between Frequency (VFO) Mode and Memory (MR) mode. Memory mode is sometimes also referred to as Channel mode.
To save frequencies to channel memory you must be in Frequency (VFO) mode.

■A/B select key

The [A/B] key switches between A (upper) and B (lower) displays. The frequency or channel on the selected display becomes the active listening and transmit frequency or channel.
To save frequencies to channel memory you must be on the A display.

■Numeric keypad

The radio comes standard with a full numeric keypad.

The numeric keys have their secondary function printed on them (in reality it's rather menu short-cuts, more on that in Chapter 3.1, working the menu system).

The [*⬆] and [#🔒] keys on the other hand have actual secondary functions, scan and keypad lock respectively.

Press and hold the [0] key to display the battery voltage.

NOTE

The charger and battery are fitted with matching notches so that you can charge your battery on its own! Practical if you have two batteries. That way you can charge one battery while still using your radio.

Radio should be turned OFF during charge cycle.

■Pound [#🔒] Key

When listening to broadcast FM a momentary press [#🔒] will start the scanning. Scanning in broadcast FM will

stop as soon as an active station is found, regardless of scanner resume method.

The radio features a keypad lock that locks out all keys except for the three side keys.

To enable or disable the keypad lock, press and hold the [#🔒] key for about two seconds.

You can also enable so that the radio automatically locks the keypad after ten seconds from the menu, see Chapter 3.1, working the menu system (menu 23).

■Star[*⬆]/scan Key

To enable the scanner, press and hold the [*⬆] key for about two seconds. See Chapter 3.2, scanning for details.

■Menu and function keys

-The [MENU] key, used to enter the menu and confirm menu options.

-The [UP] and [DOWN] keys are used to navigate through the menu as well as select channels and step up or down in frequency (depending on operating mode).

-The [EXIT] key is used to exit menus and cancel menu options.

For a more in-depth explanation on how to work the menu see Chapter 3.1, working the menu system.

Chapter 2. Basic Operations

2.1 Power and volume

Before we turn the power on, make sure you have attached the battery and antenna.

■Turning the unit on

To turn the unit on, simply rotate the volume/power knob clockwise until you hear a "click". If your radio powers on correctly there should be an audible double beep after about one second and the display will show a message or flash the LCD depending on settings for about one second. Then it will display a frequency or channel. If the Voice prompt is enabled, the voice will announce "frequency mode" or "channel mode".

Figure 2.1.1.Frequency mode

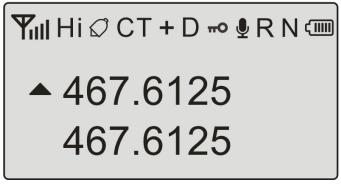

Figure 2.1.2.Channel mode

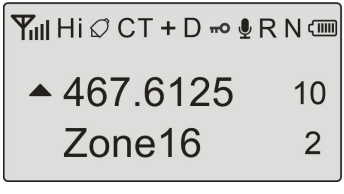

■Turning the unit off

Turn the volume/power knob counter-clock wise all the way until you hear a "click". The unit is now off.

■Adjusting the volume

To turn up the volume, turn the volume/power knob clock-wise. To turn the volume down, turn the volume/power knob counter-clock-wise. Be careful not to turn it too far, as you may inadvertently turn your radio off.

2.2 Making a call

NOTE

Press the【A/B】key to switch the main channel to the other channel if there is 2 channels shown on the display. Press the 【V/M】 key to switch between VFO and channel display.

• Call channel mode: After selecting a channel, hold down the [PTT] key to initiate a call to the current channel. Speak into the microphone with normal tone. Initiate a call, the red LED is on.

• Frequency mode call: Press the [V/M] key to switch to the frequency mode, the frequency range allowed

entering, press the [PTT] key, a call to the current channel. Speak into the microphone with normal tone. Initiate a call, the red LED is on.

• Receive a call: When you release the [PTT] key, you can answer it without any action.

When receiving a call, the green LED is on.

NOTE

To ensure the best reception volume, keep the distance between the microphone and the mouth at the time of transmission from 2.5 cm to 5 cm.

2.3 Channel selection

There are two modes of operation: Frequency (VFO) mode, and Channel or Memory (MR) mode.

For everyday use, Channel (MR) mode is going to be a whole lot more practical than Frequency (VFO) mode. However, Frequency (VFO) mode is very handy for experimentation out in the field. Frequency (VFO) mode is also used for programming channels into memory.

In Channel (MR) mode you can navigate up and down the channel by using the [UP] and [DOWN] keys.

Ultimately which mode you end up using will depend entirely on your use case.

2.4 Frequency (VFO) mode

In Frequency (VFO) mode you can navigate up and down the band by using the [UP] and [DOWN] keys. Each press will increment or decrement your frequency according to the frequency step you've set your transceiver to.

You can also input frequencies directly on your numeric keypad with kilohertz accuracy.

The following example assumes the use of a 12.5 kHz frequency step.

Example 2.4.1. Entering the frequency 462.6125 MHz on display *A*

1. Use the [V/M] key to switch to Frequency (VFO) mode.
2. Press [A/B] until the ▲ icon appears next to the upper display.
3. Enter [4][6][2][6][1][2][5] on the numeric keypad.

WARNING

Just because you can program in a channel does not mean you're automatically authorized to use that frequency. Transmitting on frequencies you're not authorized to operate on is illegal, and in most jurisdictions a serious offence. If you get caught transmitting without a license you can and will get fined, and in worst case sent to jail. However, it is legal in most jurisdictions to listen. Contact your local regulatory body for further information on what laws, rules and regulations apply to your area.

2.5 Channel (MR) mode

The use of Channel (MR) mode is dependent on actually having programmed in some channels to use.
Once you have channels programmed and ready, you can use the [UP] and [DOWN] keys to navigate between channels.

Chapter 3. Advanced Operations

Chapter 3 covers the more advanced operations, such as setup of repeater offset and programming via computer link.

3.1 Working the menu system

3.2 Scanning

3.3 Fast scan frequency and pairing

3.4 Dual watch

3.5 CTCSS, DCS and Tone-burst

3.6 DTMF

3.7 DTMF call

3.8 FM Radio

3.9 VOX

3.10 Special DCS

3.11 Manual programming

3.1 Working the menu system

For a complete reference on available menu items and parameters, see Appendix C, Menu definitions.

■Basic use

Procedure 3.1.1 Using the menu with arrow keys

1. Press the [MENU] key to enter the menu.
2. Use the [UP] and [DOWN] keys to navigate between menu items.
3. Once you find the desired menu item, press [MENU] again to select that menu item.
4. Use the [UP] and [DOWN] keys to select the desired parameter.
5. When you've selected the parameter you want to set for a given menu item;
   - To confirm your selection, press [MENU] and it will save your setting and bring you back to the main menu.
   - To cancel your changes, press [EXIT] and it will reset that menu item and bring you out of the menu entirely.
6. To exit out of the menu at any time, press the [EXIT] key.

■Using short-cuts

As you may have noticed if you looked at Appendix C, Menu definitions, every menu item has a numerical value associated with it. These numbers can be used for direct access of any given menu item.
The parameters also have a number associated with them; see Appendix C, Menu definitions for details.

Procedure 3.1.2 Using the menu with short-cuts

1. Press the [MENU] key to enter the menu.
2. Use the numerical keypad to enter the number of the menu item.
3. To enter the menu item, press the [MENU] key.
4. For entering the desired parameter you have two options:
   A. Use the arrow keys as we did in the previous section; or
   B. Use the numerical keypad to enter the numerical short-cut code.
5. And just as in the previous section;
   A. To confirm your selection, press [MENU] and it will save your setting and bring you back to the main menu.
   B. To cancel your changes, press [EXIT] and it will reset that menu item and bring you out of the menu entirely.
6. To exit out of the menu at any time, press the [EXIT] key.

3.2 Scanning

The radio features a built in scanner for the VHF and UHF bands. When in Frequency (VFO) mode it will scan in steps according to your set frequency step. In Channel (MR) mode it will scan your channels.

Dual Watch is inhibited while scanning

NOTE

To enable the scanner, press and hold the [*⬆] key for about two seconds. Press [#🔒] key to exit scanning mode.

■Scanning modes

The scanner is configurable to one of three ways of operation: Time, carrier or search, each of which is explained in further details in their respective section below.

Procedure 3.2.1 Setting scanner mode

1. Press the [MENU] key to enter the menu.
2. Enter [1][8] on your numeric keypad to come to scanner mode.
3. Press the [MENU] key to select.
4. Use the [UP] and [DOWN] keys to select scanning mode.

5. Press the [MENU] key to confirm and save.

6. Press the [EXIT] key to exit the menu.

-Time operation

In Time Operation (TO) mode, the scanner stops when it detects a signal, and after a factory preset time out, it resumes scanning.

-Carrier operation

In Carrier Operation (CO) mode, the scanner stops when it detects a signal, and after a factory preset time with no signal it resumes scanning.

-Search operation

In Search Operation (SE) mode, the scanner stops when it detects a signal. To resume scanning you must press and hold the [*⬆] key again.

In the CPS Software Path: - Edit - Optional Features - Scan Mode, it can set three scan modes, and program the desired scan mode and write it to the radio.

■Tone Scanning

Scanning for DCS and CTCSS Codes/ Tones

Scanning for a DCS code or CTCSS tone can be done while Frequency Mode (VFO) or Channel Mode (MR) is selected. Only when VFO mode is selected, can the detected code / tone be saved to menu 11/12.

NOTE

DCS code and CTCSS tone scanning mode can be accessed with or without a signal being present. The scanning process itself only occurs while a signal is being received.

Not all repeaters requiring a DCS code or CTCSS tone for access will transmit one back. In that case, the transmitter of a station that can access the repeater would need to be scanned. In other words: this would be done by listening to stations on the repeater's input frequency.

Scanning for a DCS Tone

1. Press [MENU] key to enter the menu.
2. Enter [1][1]on your numeric keypad to come to Menu 11: RX DCS.
3. Press the [MENU] key to select. Insure you have a tone activated (and it is not off).
4. Press the [*⬆] to begin DCS scanning.

Scanning for CTCSS Tone

1. Press [MENU] key to enter the menu.
2. Enter [1][2] on your numeric keypad to come to Menu 12: RX CTCS.
3. Press the [MENU] key to select. Insure you have a tone activated (and it is not off).
4. Press the [*⬆] to begin CTCSS scanning.

■Procedure 3.2.2 CPS programming Channel scanning

1. Channels are added to the scan group via CPS programming software.

   In the channel list, the Scan Add option is set to ON, the channel is added to the scan group.

Figure 3.2.1Add channel scan

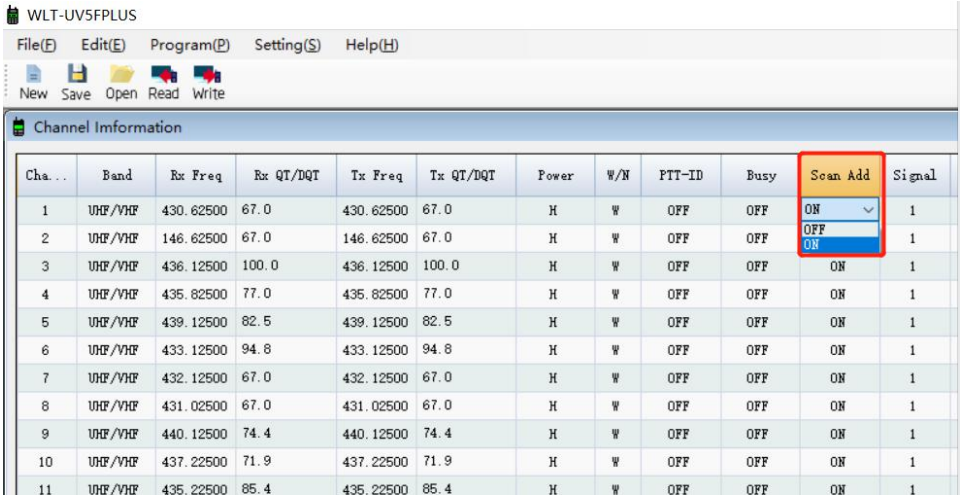

Cha...	Band	Rx Freq	Rx QT/DQT	Tx Freq	Tx QT/DQT	Power	W/N	PTT-ID	Busy	Scan Add	Signal
1	UHF/VHF	430.62500	67.0	430.62500	67.0	H	W	OFF	OFF	ON	1
2	UHF/VHF	146.62500	67.0	146.62500	67.0	H	W	OFF	OFF		1
3	UHF/VHF	436.12500	100.0	436.12500	100.0	H	W	OFF	OFF	ON	1
4	UHF/VHF	435.82500	77.0	435.82500	77.0	H	W	OFF	OFF	ON	1
5	UHF/VHF	439.12500	82.5	439.12500	82.5	H	W	OFF	OFF	ON	1
6	UHF/VHF	433.12500	94.8	433.12500	94.8	H	W	OFF	OFF	ON	1
7	UHF/VHF	432.12500	67.0	432.12500	67.0	H	W	OFF	OFF	ON	1
8	UHF/VHF	431.02500	67.0	431.02500	67.0	H	W	OFF	OFF	ON	1
9	UHF/VHF	440.12500	74.4	440.12500	74.4	H	W	OFF	OFF	ON	1
10	UHF/VHF	437.22500	71.9	437.22500	71.9	H	W	OFF	OFF	ON	1
11	UHF/VHF	435.22500	85.4	435.22500	85.4	H	W	OFF	OFF	ON	1

In the CPS Software Path: - Channel – Scan Add, Allow the channel to be added to the scan group, ON

allows to add, OFF prohibits to add.

3.3 Fast scan frequency and pairing

This unit can be regarded as a receiver to quickly implement frequency monitoring, pairing, and callback functions.

1. In standby mode, press [MENU] [*⬆] to enter the scan receiving status, and the received frequency and sub tone code will be displayed on the screen.

2. Press [UP]/[DOWN] to switch the UHF/VHF band in the scan.

3. When the received frequency and subsonic code are relatively stable, pressing the [MENU] key of the unit will automatically store the received frequency and sub tone code and turn on the speaker.

3. Press and hold the [PTT] key of this unit to realize callback.

The distance between the transmitter and the receiver is not less than 50 cm.

3.4 Dual Watch

The radio features Dual Watch functionality (single receiver) with the ability to lock the transmit frequency to one of the two channels it monitors.

You can both have one receiver in your radio and flip-flop between two frequencies at a fixed interval (known as Dual Watch), or you can equip a radio with two receivers (known as Dual Receive or Dual VFO).

Procedure 3.4. Enabling or disabling Dual Watch mode

1. Press [MENU] key to enter the menu.
2. Enter [7] on the numeric keypad to get to Dual Watch.
3. Press [MENU] to select.
4. Use the [UP] and [DOWN] keys to enable or disable.
5. Press the [MENU] key to confirm.
6. Press the [EXIT] key to exit the menu.

3.5 DCS, CTCSS and Tone-burst

Some times when you're working with larger groups of people using the same channel, things can get very crowded, very fast. To minimize this problem, several methods of blocking out unwanted transmissions on your frequency have developed. In general, there are two forms of selective calling in two-way radio systems: Group calling, and individual calling.

Group calling is a one-to-many form of communication. Every radio in your working group is configured the

same way and any radio will make contact with every other radio in the group.
Individual calling, sometimes also known as paging, is a one-to-one form of communication. Every radio is programmed with a unique ID code. And only by sending out a matching code can you get that radio to open up to your transmissions.

The radio features three different ways of group calling:

- DCS
- CTCSS
- Tone-burst (1750Hz)

The radio does not feature any form of individual calling.
Using these features does NOT mean that others won't be able to listen in on your transmissions.
They only provide a method to filter out unwanted incoming transmissions. Any communications made while using these features will still be heard by anyone not employing filtering options of their own.
Also, you cannot change the DCS or CTCSS settings while in memory (MR) mode.
CTCSS and 1750Hz tone-burst are also popular methods among amateur radio operators to open up repeaters.

■DCS

DCS is set with menu 11 RX DCS and menu 13 TX DCS.

For a complete list of available DCS codes, see Appendix E, “DCS Codes”.

Procedure 3.5.1 DCS setup how-to

1. Press the [MENU] key to enter the menu.
2. Enter [1][1] on the numeric keypad to get to receiver DCS.
3. Press [MENU] to select.
4. Enter desired DCS code on the numeric keypad.
5. Press [MENU] to confirm and save.
6. Enter [UP] on the numeric keypad to go to transmitter DCS.
7. Press [MENU] to select.
8. Enter desired DCS code on the numeric keypad. Make sure it's the same code as that you entered for receiver DCS.
9. Press [MENU] to confirm and save.
10. Press [EXIT] to exit the menu system.

For more information see the section called “11 RX DCS - Receiver DCS” and the section called “13 TX DCS - Transmitter DCS” in Appendix C, Menu definitions.

■CTCSS

CTCSS is set with menu 12 RX CTCS and menu 14 TX CTCS.

For a complete list of available CTCSS codes and corresponding sub-tone frequencies, see Appendix D, CTCSS Table.

Procedure 3.5.2 CTCSS setup how-to

1. Press the [MENU] key to enter the menu.
2. Enter [1][2] on the numeric keypad to get to receiver CTCSS (RX CTC).
3. Press [MENU] to select.
4. Enter desired CTCSS sub-tone frequency in hertz on the numeric keypad.
5. Press [MENU] to confirm and save.
6. Enter [UP] on the numeric keypad to go to transmitter CTCSS (TX CTC).
7. Press [MENU] to select.

8. Enter desired CTCSS sub-tone frequency in hertz on the numeric keypad. Make sure it's the same frequency as that you entered for receiver CTCSS.

9. Press [MENU] to confirm and save.

10. Press [EXIT] to exit the menu system.

For more information see the section called “12 RX CTCS - Receiver CTCSS” and the section called “14 TX CTCS - Transmitter CTCSS” in Appendix C, Menu definitions.

■1000Hz, 1450Hz, 1750Hz, 2100Hz Tone-burst

In the transmitting state, simultaneously press and hold the [PTT] and the [SK2] to send the selected tone-burst.

Procedure 3.5.3 Tone-burst setup how-to

1. Press the [MENU] key to enter the menu.
2. Enter [1][6] on the numeric keypad to get to tone-burst.
3. Press [MENU] to select.
4. Use the [UP] and [DOWN] keys to select between 1000Hz, 1450Hz, 1750Hz and 2100Hz.
5. Press [MENU] to confirm and save.
6. Press [EXIT] to exit the menu system.

3.6 DTMF

DTMF is an in-band signaling method using dual sinusoidal signals for any given code. Originally developed for telephony systems, it has proved a very versatile tool in many other areas.

In two-way radio systems, DTMF is most commonly used for automation systems and remote control. A common example would be in amateur radio repeaters where some repeaters are activated by sending out a DTMF sequence (usually a simple single-digit sequence).

	1209Hz	1336Hz	1477Hz	1633Hz
697Hz	1	2	3	A
770Hz	4	5	6	B
852Hz	7	8	9	C
941Hz	*	0	#	D

The radio has a full implementation of DTMF, including the A, B, C and D codes.

NOTE

The numerical keys, as well as the [*⬆] and [#🔒] keys correspond to the matching DTMF codes. The A, B, C and D codes are located in the [MENU],[UP],[DOWN] and [EXIT] keys respectively.

3.7 DTMF calls

CPS programmed

The CPS programming settings of the DTMF call function include programming of important parameters such as DTMF code group, local ID code, and group call code.

Before using the DTMF selective call function, make the following settings through the CPS programming software:

Procedure 3.7.1 CPS programming setup how-to

1. DTMF encoding / decoding parameters Edit

In the CPS software - "Edit" - "DTMF - DTMF Encoder / Decoder Edit", the important parameters such as DTMF Encoder group, ANI code, and group code are programmed.

Figure 3.7.1 DTMF Encoder/ Decoder Edit

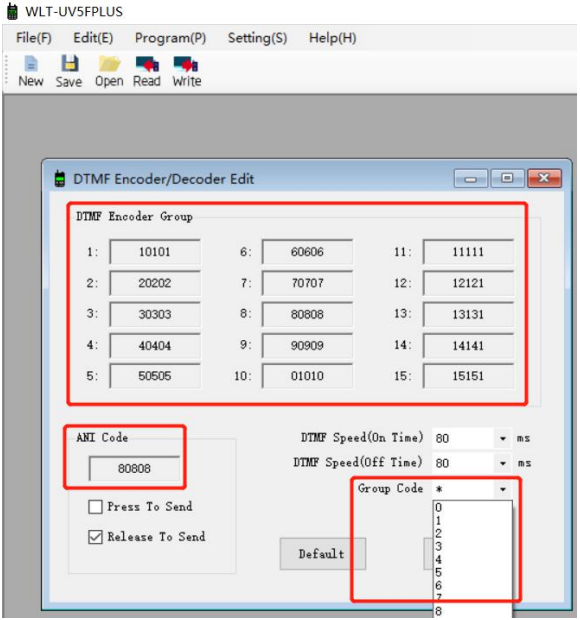

2. Set the signaling code, PTT-ID mode

Method 1: PC settings

In the CPS software - "Edit" - "Channel Information", it can signal the channel selection, PTT-ID mode selection, and write it to the radio.

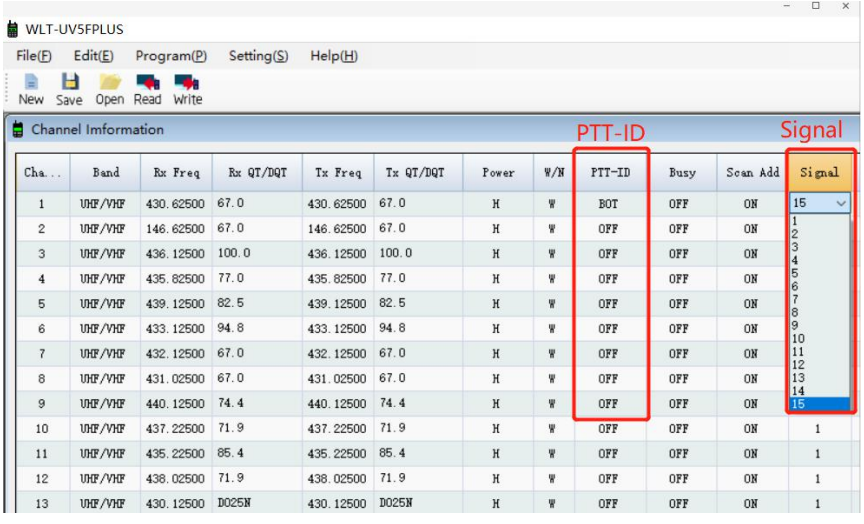

Cha...	Band	Rx Freq	Rx QT/DQT	Tx Freq	Tx QT/DQT	Power	W/N	PTT-ID	Busy	Scan Add	Signal
1	UHF/VHF	430.62500	67.0	430.62500	67.0	H	W	BOT	OFF	ON	15
2	UHF/VHF	146.62500	67.0	146.62500	67.0	H	W	OFF	OFF	ON	
3	UHF/VHF	436.12500	100.0	436.12500	100.0	H	W	OFF	OFF	ON	
4	UHF/VHF	435.82500	77.0	435.82500	77.0	H	W	OFF	OFF	ON	
5	UHF/VHF	439.12500	82.5	439.12500	82.5	H	W	OFF	OFF	ON	
6	UHF/VHF	433.12500	94.8	433.12500	94.8	H	W	OFF	OFF	ON	
7	UHF/VHF	432.12500	67.0	432.12500	67.0	H	W	OFF	OFF	ON	
8	UHF/VHF	431.02500	67.0	431.02500	67.0	H	W	OFF	OFF	ON	
9	UHF/VHF	440.12500	74.4	440.12500	74.4	H	W	OFF	OFF	ON	
10	UHF/VHF	437.22500	71.9	437.22500	71.9	H	W	OFF	OFF	ON	1
11	UHF/VHF	435.22500	85.4	435.22500	85.4	H	W	OFF	OFF	ON	1
12	UHF/VHF	438.02500	71.9	438.02500	71.9	H	W	OFF	OFF	ON	1
13	UHF/VHF	430.12500	D025N	430.12500	D025N	H	W	OFF	OFF	ON	1

Method 2: Radio menu settings

1. Press the [MENU] key to enter the menu.
2. Enter [1][7] on the numeric keypad to get to S-CODE.
3. Press [MENU] to select.
4. Use the [UP] and [DOWN] keys to select 1-15.
5. Press [MENU] to confirm and save.
6. Press [EXIT] to exit the menu system.

3.8 FM Radio

The FM radio function of the radios defaults to long press the [SK3]key.

Procedure 3.8.1 Activating FM radio

In standby, press [SK3] to activate the FM Radio function, while it shows the FM frequencies on the display.

Procedure 3.8.2 Searching FM stations

In the FM radio mode, press [#🔒] to get it searching. When searching the correct station, it stops.

When listening to broadcast FM, the [A/B] key switches between 65-75 MHz and 76-108 MHz band.

Procedure 3.8.3 Exit from the FM radio

Please press [SK3] to exit out from the FM radio mode.

NOTE

When working on the FM frequencies, the current frequency and channel will be standby and it will be temporarily switched to two-way communication once getting the receiving signals, and then automatically get back to FM radio after the signal disappears. Press [PTT] to transmit, and still gets back to FM radio after 5 seconds.

3.9 VOX (Voice activated transmit)

Enable the VOX; you can speak into the microphone to start transmitting instead of pressing the [PTT] key. A total of 10 levels are provided.

Procedure 3.9 VOX setup how-to

1. Press the [MENU] key to enter the menu.
2. Enter [4] on the numerical keypad, to enter the Vox Level.
3. Press [MENU] to select.
4. Press the [UP] or [DOWN] key to select 1 to 10.

-The larger the value, the higher the sensitivity.

5. Press [MENU] to confirm and save.

6. Press [EXIT] to exit the menu.

- Repeat the above operation and select OFF to turn off the voice-activated transmission function.

3.10 Special DCS

The special DCS is a dynamic DCS. Due to its dynamic nature, it is often impossible to crack DCS. He needs to set the DCS code and activate the special DCS function. This function is valid. After the special DCS signaling is enabled, only the sender and the receiver can set the same special DCS to implement the intercom.

Other manufacturers or models may not be compatible because the encryption algorithms are different.

Procedure 3.10 Special DCS setup how-to

1. Press the [MENU] key to enter the menu.

2. Enter [3] [3] on the numerical keypad, to enter the Special DCS.

3. Press [MENU] to select.

4. Press the [UP] or [DOWN] key to select ON.

- OFF: Turn off the special DCS function.

5. Press [MENU] to confirm and save.

6. Press [EXIT] to exit the menu.

3.11 Manual programming

Memory channels are an easy way to store commonly used frequencies so that they can easily be retrieved at a later date.

The radio features 128 memory channels that each can hold: Receive and transmit frequencies, transmit power, group signaling information, bandwidth, ANI/ PTT-ID settings and a six character alphanumeric identifier or channel name .

Frequency Mode vs. Channel Mode

Switch between Modes by using the [V/M] key.

These two modes have different functions and are often confused.

Frequency Mode (VFO) - Used for a temporary frequency assignment, such as a test frequency or quick field

programming if permitted.

Channel Mode (MR) - Used for selecting preprogrammed channels.

All programming must be initially none in the frequency mode (VFO) only. From there you have the option of assigning the entered data to a specific channel for access in the channel mode.

Call tones, TX/RX tones, squelch, and power settings are adjustable on saved channels in channel mode.

Ex. Programming a Simplex Channel with CTCSS tone

EXAMPLE New memory in Channel 11:

RX/TX = 462.625 MHz

TX CTCSS tone 67.0

Procedure 3.11.1 Programming a Simplex Channel with CTCSS tone

1. Set radio to VFO Mode by pressing [V/M] Channel number at the right will disappear.
2. Press [MENU][2][7][MENU] to come to Menu 27: Delete, Press [1][0][MENU] to deletes prior data in channel (Ex. CH-11).
3. Press [EXIT] to exit the menu. Enter RX frequency [4][6][2][6][2][5] on you numeric keypad.
4. Press [MENU][1][2][MENU] to come to Menu 12: RX CTCS, press [UP]/[DOWN] to select 67.0,and then

press [MENU] to confirm.

5. Press [MENU][1][4][MENU] to come to Menu 14: TX CTCSS, press [UP]/[DOWN] to select 67.0,and then press [MENU] to confirm.
6. Press [MENU][2][6][MENU] to come to Menu 26: Memory, and then Press [1][0][MENU] to confirm (Ex. CH-11).
7. Press [V/M] return to MR Mode. Channel number will re-appear.

Ex: Programming a Channel Repeater Offset with CTCSS Tone

EXAMPLE New memory in Channel 20:

RX = 462.625 MHz

TX = 452.625 MHz(This is a (+ 10.00) Offset)

TX CTCSS tone 67.0

RX CTCSS tone 67.0

Procedure 3.11.2 Programming a Channel Repeater Offset with CTCSS Tone

1. Set radio to VFO Mode by pressing [V/M] Channel number at the right will disappear.
2. Press [MENU] [2] [7] [MENU] to come to Menu 27: Delete, Press [1][9][MENU] to deletes prior data in channel (Ex. CH-20).

3. Press [EXIT] to exit the menu. Enter RX frequency [4][6][2][6][2][5] on you numeric keypad.
4. Press [MENU] [1][2] [MENU] to come to Menu 12: RX CTCS, press [UP]/[DOWN] to select 67.0, and then press [MENU] to confirm.
5. Press [MENU] [1][4] [MENU] to come to Menu 14: TX CTCSS, press [UP]/[DOWN] to select 67.0, and then press [MENU] to confirm.
6. Press [MENU] [2][5] [MENU] to come to Menu 25: Offset, enter offset frequency [1][0][0][0][0] on you numeric keypad.
7. Press [MENU] [2][4][MENU] to come to Menu 24: Direction, press [UP]/[DOWN] to select Plus or Minus offset.
8. Press [MENU] [2] [6] [MENU] to come to Menu 26: Memory, and then Press [1][9][MENU] to confirm (Ex 20).
9. Press [V/M] return to MR Mode. Channel number will re-appear.

Certain Amateur Radio repeaters (especially in Europe) use a 1750Hz tone burst to open up the repeater.

If you're still unable to make a connection, contact the person in charge of the radio system with your employer or your local amateur radio club, as the case may be.

If you for some reason want to listen to the repeater's input frequency instead, press [MENU] and [*]

momentarily and you'll reverse your transmit and receive frequencies.

Commercial Radio Setup

PLMR users in the United States are mandated to move to 12.5 kHz narrowband communication in the 150-174 MHz VHF and 421-512MHz UHF bands by January 1, 2013.

Follow these instructions to set your radio to Narrowband mode: This section is only true for VFO mode. WN is settable on a per channel basis and has to be set prior to storing a channel. Once a channel has been programmed, the channel must be deleted and reprogrammed to change the WN setting.

1. Press the [V/M] key to enter frequency mode.
2. Press the [MENU] key to enter the menu.
3. Enter [5] on the numerical keypad.
4. Press [MENU] to select.
5. Use the [UP] and [DOWN] keys to select between Wide and Narrow.
6. Press [MENU] to confirm and save
7. Press [EXIT] to exit the menu.

Amateur Radio Setup

In contrast with Commercial radio operators, who often need very specific requirements to be compatible with a very specific radio implementation, Amateur radio operators tend to need the broadest possible settings in order to be compatible with as many systems as possible. This basically implies turning all the fancy features that you typically might need for a commercial setup off.

In a typical Amateur radio setup the following settings would be recommended:

• Set bandwidth to Wide (menu item 5).

• Turn DCS and CTCSS off (menu items 11 through 14).

• Turn ROGER, DTMF-ST, PTT-ID off (menu item 30, menu items 15 and menu items19).

• Turn off Squelch Tail Elimination (STE) features (menu items 29).

For further information see Appendix C, Menu definitions and Chapter 3.1, working the menu system.

WARNING

FRS, GMRS, MURS, PMR446

You may be tempted to use FRS, GMRS, MURS (in the USA) or PMR446 (in Europe) frequencies. Do note however that there are restrictions on these bands that make this transceiver illegal for use.

Chapter 4. Product Safety Guide

Important Safety Information

Before using your radio, please read these general precautions and warnings.

Warning and Notice Statements

To make the most of this radio, it must be used properly.

Please read the installation and operating instructions carefully before using the radio. Special attention must be paid to the WARNING and NOTICE statements in this manual.

WARNING

Statements identify conditions that could result in personal injury or loss of life.

NOTICE

Statements identify conditions that could cause damage to the radio or other equipment.

FCC Statement

This device complies with part 15 of the FCC Rules. Operation is subject to the following two (2) conditions:

1. This device may not cause harmful interference, and

2. This device must accept any interference received, including interference that may cause undesired operation.

NOTE

This equipment has been tested and found to comply with the limits for a Class B digital device, pursuant to Part 15 of the FCC Rules. These limits are designed to provide reasonable protection against harmful interference in a residential installation. This equipment generates uses and can radiate radio frequency energy and, if not installed and used in accordance with the instructions, may cause harmful interference to radio communications. However, there is no guarantee that interference will not occur in a particular installation. If this equipment does cause harmful interference to radio or television reception, which can be determined by turning the equipment off and on, the user is encouraged to try to correct the interference by one or more of the following measures:

- Reorient or relocate the receiving antenna.
- Increase the separation between the equipment and receiver.

- Connect the equipment into an outlet on a circuit different from that to which the receiver is connected.
- Consult the dealer or an experienced radio/TV technician for help.

NOTE

Any changes or modifications to this unit not expressly approved by the party responsible for compliance could void the user's authority to operate the equipment.

Safety Training Information

This radio complies with the following guidelines and standards regarding RF energy and electromagnetic energy levels as well as evaluation of those levels for human exposure:

- United States Federal Communications Commission, Code of Federal Regulations; 47 CFR § 1.1307, 1.1310 and 2.1093
- American National Standards Institute (ANSI) / Institute of Electrical and Electronic Engineers (IEEE) C95.1:2005; Canada RSS102 Issue 5 March 2015
- Institute of Electrical and Electronic Engineers (IEEE) C95.1:2005 Edition

The following WARNINGS and NOTICE information will make you aware of RF exposure hazards and how to assure you operate the radio within the FCC RF exposure limits established for the radio.

WARNINGS

To control your exposure and ensure compliance with the occupational/ controlled environmental exposure limits, always adhere to the following procedures.

Guidelines:

-**DO NOT** remove the RF Exposure Label from the device.

-User awareness instructions should accompany device when transferred to other users.

-**DO NOT** use this device if the operational requirements described herein are not met.

Operating Instructions:

- DO NOT operate with more than a duty cycle of 5% transmit, 5% receive and 90% standby. The radio is transmitting when the PTT key is pressed and the transmit information shows on the LCD screen.
- Your radio generates electromagnetic RF (radio frequency) energy when it is transmitting. To ensure that you and those around you are not exposed to excessive amounts of that energy, DO NOT touches the

antenna when transmitting. KEEP the radio at least two (2) inches (5 cm) away from yourself and others when transmitting.

- When worn on the body, always place the radio in an approved holder, holster, case, or body harness or by use of the correct clip for this product. Use of non-approved accessories may result in exposure levels which exceed the FCC's occupational/ controlled environmental RF exposure limits.
- DO NOT allow children or anyone unfamiliar with proper procedures to operate the radio without supervision.
- Use of non-approved antennas, batteries, and accessories causes the radio to exceed the FCC RF exposure guidelines.
- Contact your local dealer for the product's optional accessories.
- Changes or modifications to your radio MAY VOID its compliance with FCC (Federal Communications Commission) rules and make it illegal to use.
- Failure to observe any of these warnings may cause you to exceed FCC RF exposure limits or create other dangerous conditions.

EU Regulatory Conformance

As certified by the qualified laboratory, the product is in compliance with the essential requirements and other relevant provisions of the following directives:

- 2014/53/EU
- 2012/19/EU
- 2011/65/EU
- 2006/66/EU

Please note that the above information is applicable to EU countries only.

CE Requirements:

• European Users should note that operation of this unit in Transmit mode requires the operator to have a valid Amateur Radio License from their respective Countries Amateur Radio Licensing Authority for the Frequencies and Transmitter Power levels that this Radio transmits on. Failure to comply may be unlawful and liable for prosecution. At this subject, refer to the “EU” specification guide 2014/53/EU.

•Attention in case of use

This product can be used in EU countries and regions, including: Belgium (BE), Bulgaria (BG), Czech Republic (CZ), Denmark (DK), Germany (DE), Estonia (EE), Ireland (IE), Greece (EL), Spain (ES), France (FR), Croatia (HR),

Italy (IT), Cyprus (CY), Latvia (LV), Lithuania (LT), Luxembourg (LU), Hungary (HU), Malta (MT), Netherlands (NL), Austria (AT), Poland (PL), Portugal (PT), Romania (RO), Slovenia (SI), Slovakia (SK), Finland (FI), Sweden (SE) and United Kingdom (UK).

For the warning information of the frequency restriction, please refer to the package or manual section.

•Disposal of your Electronic and Electric Equipment

Products with the symbol (crossed-out wheeled bin) cannot be disposed as household waste. Electronic and Electric Equipment should be recycled at a facility capable of handling these items and their waste by products. In EU countries, please contact your local equipment supplier representative or service center for information about the waste collection system in your country.

IC Requirements:

Licence-exempt radio apparatus

This device contains licence-exempt transmitter(s)/receiver(s) that comply with Innovation, Science and Economic Development Canada's licence-exempt RSS(s).

Operation is subject to the following two conditions:

(1) This device may not cause interference.

(2) This device must accept any interference, including interference that may cause undesired operation of the device.

Le présent appareil est conforme aux CNR d'Industrie Canada applicables aux appareils radio exempts de licence. L'exploitation est autorisée aux deux conditions suivantes:

(1) l'appareil ne doit pas produire de brouillage;

(2) l'utilisateur de l'appareil doit accepter tout brouillage radioélectrique subi, même si le brouillage est susceptible d'en compromettre le fonctionnement

Appendix A. - Troubleshooting

Phenomena	Analysis	Solution
You cannot turn on the radio.	The battery may be installed improperly.	Remove and reattach the battery.
	The battery power may run out.	Recharge or replace the battery.
	The battery may suffer from poor contact caused by dirty or damaged battery contacts.	Clean the battery contacts or replace the battery.
During receiving, the voice is weak or intermittent.	The battery voltage maybe low.	Recharge or replace the battery.
	The volume level may be low.	Increase the volume.
	The antenna maybe loose or maybe installed incorrectly.	Turnoff the radio, and then remove and reattach the antenna.
	The speaker maybe blocked.	Clean the surface of the speaker.
You cannot communicate with other group members.	The frequency or signaling type maybe inconsistent with that of other members.	Verify that your TX/RX frequency and signaling type are correct.
	You may be too far away from other members.	Move towards other members.
You hear unknown voices or noise.	You may be interrupted by radios using the same frequency.	Change the frequency, or adjust the squelch level.
	The radio in analog mode maybe set with no signaling.	Request your dealer to set signaling for the current channel to avoid interference
You are unable to hear anyone	You may be too far away from other members.	Move towards other members.

because of too much noise and hiss.	You may be in an unfavorable position. For example, your communication may be blocked by high buildings or blocked in an underground area.	Move to an open and flat area, restart the radio, and try again.
	It may be the result of external disturbance (such as electromagnetic interference).	Stay away from equipment that may cause interference.
The radio keeps transmitting.	VOX may be turned on or the headset is not installed in place	Turn off the VOX function. Check that the headphones are in place.
You cannot use the keys.	The keypad may not work temporarily.	Restart the radio.

If the above solutions cannot fix your problems, or you may have some other queries, please contact your dealer for more technical support.

Appendix B. - Technical Specifications

General

Frequency Range	(VHF)136-174MHz/(UHF)400-470MHz (Rx) (VHF)144-148MHz/(UHF)420-450MHz (Tx)
Memory Channel	128 Groups
Operation Voltage	DC 7.4 V ±10%
Battery Capacity	2200mAH (Li-Ion)
Frequency Stability	±2.5ppm
Operating Temperature	-20℃ to +60℃
Mode of Operation	Simplex
Antenna Impedance	50ohm

Transmitter Part

RF Output Power	(VHF)5W (UHF)4W/3W/1W
FM Modulation	11K0F3E@12.5KHz

Spurious Emission	-36dBm < 1GHz， -30dBm > 1GHz
Adjacent Channel Power	60dB @ 12.5KHz
Transmission current	≤1600mA

Receiver Part

Receive Sensitivity	0.25μV (12dB SINAD)
Adjacent Channel Selectivity	≥55dB@12.5KHz
Inter Modulation and Rejection	≥55dB@12.5KHz
Conducted Spurious Emission	≤-57dB@12.5KHz
Rated Audio Power Output	1W @16 ohms
Receive current	≤380mA
Rated Audio Distortion	≤5%

All specifications may be modified without prior notice or liability. Thank you.

Appendix C. - Menu definitions

Menu №	Name (Full name)	Setting	Description
0	Squelch -Squelch level	[0 - 9]	Setting the squelch to 0 will open up the squelch entirely. - Squelch silences the receiver when there is no signal. - Setting the squelch to 0 will open up the squelch entirely.
1	Step - Frequency Step	2.5K[0] | 5K[1] | 6.25K[2] | 10.00K [3]| 12.50K[4]| 20.0K[5] | 25.0K[6] | 50.0K[7]	Selects the amount of frequency change in VFO/Frequency mode when scanning or pressing the [up] or [DOWN] keys.
2	Tx Power - Transmitting Power	High[0]| Low[1] | Middle[2]	Selects between High, Middle, and Low transmitter power when in VFO/Frequency mode. Use the minimum transmitter power necessary to carry out the desired communications.
3	Power save-Battery Save	OFF[0]| ON[1]	Select to activate or deactivate battery saver. Activating this feature will extend battery life, but you may miss the first few syllables before RX opens. - ON: open the function. - OFF: close the function
4	Vox Level - Voice Operated TX	OFF [0] | 1 | 2 | 3 | 4 | 5 | 6 | 7 | 8 | 9 | 10[10]	When enabled it is not necessary to push the [PTT] key on the transceiver. Adjust the gain level to an appropriate sensitivity to allow smooth transmission.

5	Bandwidth -Wideband / Narrowband	Width [0] | Narrow [1]	-Wideband (25 kHz bandwidth) or -Narrowband (12.5 kHz bandwidth).
6	Backlight - Display Illumination Time	Bright [0] | 1-10 in 1 second steps	Time-out for the LCD backlight. (seconds)
7	Dual Standby - Dual Watch, Dual Reception	OFF [0] | ON [1]	Monitor [A] and [B] at the same time. The display with the most recent activity ([A] or [B]) becomes the selected display.
8	Beep Prompt - Keypad Beep	OFF [0] | ON [1]	Allows audible confirmation of a key press.
9	Voice - Voice Prompt	OFF[0] | ON[1]	Turns the menu action voice prompt on or off.
10	Tx over time -Transmission Time-out-Timer	15[1] - 600[40] in 15 second steps (TIMEOUT-15)/15=[n]	This feature provides a safety switch that limits transmission time to a programmed value. This will promote battery conservation by not allowing you to make excessively long transmissions, and in the event of a stuck PTT switch it can prevent interference to other users as well as battery depletion.
11	Rx DCS - Receiver	OFF[0] | see DCS Table in Appendix E	Mutes the speaker of the transceiver in the absence of a

	DCS		specific low-level digital signal. If the station you are listening to does not transmit this specific signal, you will not hear anything.
12	Rx CTCSS - Receiver CTCSS	OFF[0] | see CTCSS Table in Appendix D	Mutes the speaker of the transceiver in the absence of a specific and continuous sub-audible signal. If the station you are listening to does not transmit this specific and continuous signal, you will not hear anything.
13	Tx DCS - Transmitter DCS	OFF [0] | see DCS Table in Appendix E	Transmits a specific low-level digital signal to unlock the squelch of a distant receiver (usually a repeater).
14	Tx CTCSS - Transmitter CTCSS	OFF[0] | see CTCSS Table in Appendix D	Transmits a specific and continuous sub-audible signal to unlock the squelch of a distant receiver (usually a repeater).
15	DTMFST - DTMF Side Tone	OFF [0]| DT-ST[1] | ANI-ST [2]| DT+ANI[3]	Determines when DTMF Side Tones can be heard from the transceiver speaker. OFF: No DTMF Side Tones are heard. - DT-ST: Side Tones are heard only from manually keyed DTMF codes. - ANI-ST: Side Tones are heard only from automatically keyed DTMF codes. - DT+ANI: All DTMF Side Tones are heard.
16	R-TONE- Tone-burst	1000Hz[0] | 1450Hz[1] | 1750Hz[2] | 2100Hz[3]	1000Hz, 1450Hz, 1750Hz，2100Hz Tone-burst To send out a tone-burst;

			You simultaneously will holding down the [PTT] and [SK1] key.
17	S-CODE - Signal Code	1[0] | 2[1] | 3[2] | 4[3] | 5[4] | 6[5] | 7[6] | 8[7] | 9[8] | 10[9] | 11[10] | 12[11] | 13[12] | 14[13] | 15[14]	Selects 1 of 15 DTMF codes. The DTMF codes are programmed with software and are up to 5 digits each.
18	Scan Mode - Scanner Resume Method	Time[0]|Carrier [1] |Search [2]	Scanning Resume Method : Time: Scanning will resume after a fixed time has passed. Carrier: Scanning will resume after the signal disappears. Search: Scanning will not resume.
19	PTT-ID - When to send the PTT-ID	OFF [0] | BOT [1] | EOT [2] | BOTH [3]	Determines when to sent PTT-ID. OFF: No ID is sent. BOT: The selected S-CODE is sent at the beginning. EOT: The selected S-CODE is sent at the ending. BOTH: The selected S-CODE is sent at the beginning and ending.
20	MDF-A - Channel Mode A Display	Name [0] | Frequency [1]	[A] Name/Frequency Mode Display Format. Name: Displays the channel name. Frequency: Displays programmed Frequency. Note: Names must be entered using software.
21	MDF-B - Channel Mode B Display	Name [0] | Frequency [1]	[B] Name/Frequency Mode Display Format Name: Displays the channel name. Frequency: Displays programmed Frequency.

			Note: Names must be entered using software.
22	Busy Lockout	OFF [0] | ON [1]	Disables the [PTT] key on a channel that is already in use. The transceiver will sound a beep tone and will not transmit if the [PTT] key is pressed when a channel is already in use.
23	Key Auto Lock – Automatic Keypad Lock	OFF [0] | ON [1]	When ON, the keypad will be locked if not used in 8 seconds. Pressing the [#] key for 3 seconds will unlock the keypad.
24	Direction - Frequency Shift Direction	None [0] | Plus [1] | Minus[2]	Enables access of repeaters in VFO/Frequency Mode. None: TX = RX (simplex). Plus: TX will be shifted higher in frequency than RX. Minus: TX will be shifted lower in frequency than RX.
25	Offset - Frequency shift amount	Manual input frequency (range 0.001-99.998. eg 05.000)	Specifies the difference between the TX and RX frequencies
26	Memory - Store a Memory Channel	001 - 128	This menu is used to either create new or modify existing channels (1 through 128) so that they can be accessed from MR/Channel Mode.
27	Delete - Delete a memory channel	001 - 128	This menu is used to delete the programmed information from the specified channel (1 through 128) so that it can either be programmed again or be left empty.
28	Alarm Mode	On site [0] | Send sound [1]	On site: Sounds alarm through your radio speaker only.

		| Send code [2]	Send sound: Transmits a cycling tone over-the-air. Send code: Transmits ANI code and alarm.
29	TAIL - Squelch Tail Elimination	OFF [0] | ON [1]	This function is used eliminate squelch tail noise between handholds that are communicating directly (no repeater). Reception of a 55 Hz or 134.4 Hz tone burst mutes the audio long enough to prevent hearing any squelch tail noise.
30	ROGER - Roger Beep	OFF [0] | ON [1]	Sends an end-of-transmission tone to indicate to other stations that the transmission has ended.
31	Language	English [0] | Chinese [1]	English or Chinese language prompts (including voice and display) are allowed.
32	Reset - Restore defaults	VFO [0] | ALL [1]	Resets the radio to factory defaults, with some exceptions. - VFO: Will reset all functional setting and renew factory default parameter of function setting, but not resetting the parameter of channels. - ALL: Will reset all functional setting and the parameter of all channels, and renew factory default of function.
33	Special DCS	OFF [0] | ON [1]	The special DCS is a dynamic DCS, only DCS is set, and this function is enabled. - ON: Turn on the special DCS function; - OFF: Turn off the special DCS function.

Appendix D. - CTCSS Table

CTCSS CHART (Hz)

Number	Frequency	Number	Frequency	Number	Frequency	Number	Frequency	Number	Frequency
1	67.0	2	69.3	3	71.9	4	74.4	5	77.0
6	79.7	7	82.5	8	85.4	9	88.5	10	91.5
11	94.8	12	97.4	13	100	14	103.5	15	107.2
16	110.9	17	114.8	18	118.8	19	123.0	20	127.3
21	131.8	22	136.5	23	141.3	24	146.2	25	151.4
26	156.7	27	159.8	28	162.2	29	165.5	30	167.9
31	171.3	32	173.8	33	177.3	34	179.9	35	183.5
36	186.2	37	189.9	38	192.8	39	196.6	40	199.5
41	203.5	42	206.5	43	210.7	44	218.1	45	225.7
46	229.1	47	233.6	48	241.8	49	250.3	50	254.1

Appendix E. - DCS Table

DCS CODE LIST

Number	Code	Number	Code	Number	Code	Number	Code	Number	Code
1	D023N	2	D025N	3	D026N	4	D031N	5	D032N
6	D036N	7	D043N	8	D047N	9	D051N	10	D053N
11	D054N	12	D065N	13	D071N	14	D072N	15	D073N
16	D074N	17	D114N	18	D115N	19	D116N	20	D122N
21	D125N	22	D131N	23	D132N	24	D134N	25	D143N
26	D145N	27	D152N	28	D155N	29	D156N	30	D162N
31	D165N	32	D172N	33	D174N	34	D205N	35	D212N
36	D223N	37	D225N	38	D226N	39	D243N	40	D244N
41	D245N	42	D246N	43	D251N	44	D252N	45	D255N
46	D261N	47	D263N	48	D265N	49	D266N	50	D271N
51	D274N	52	D306N	53	D311N	54	D315N	55	D325N
56	D331N	57	D332N	58	D343N	59	D346N	60	D351N

61	D356N	62	D364N	63	D365N	64	D371N	65	D411N
66	D412N	67	D413N	68	D423N	69	D431N	70	D432N
71	D445N	72	D446N	73	D452N	74	D454N	75	D455N
76	D462N	77	D464N	78	D465N	79	D466N	80	D503N
81	D506N	82	D516N	83	D523N	84	D526N	85	D532N
86	D546N	87	D565N	88	D606N	89	D612N	90	D624N
91	D627N	92	D631N	93	D632N	94	D645N	95	D654N
96	D662N	97	D664N	98	D703N	99	D712N	100	D723N
101	D731N	102	D732N	103	D734N	104	D743N	105	D754N
106	D023I	107	D025I	108	D026I	109	D031I	110	D032I
111	D036I	112	D043I	113	D047I	114	D051I	115	D053I
116	D054I	117	D065I	118	D071I	119	D072I	120	D073I
121	D074I	122	D114I	123	D115I	124	D116I	125	D122I
126	D125I	127	D131I	128	D132I	129	D134I	130	D143I
131	D145I	132	D152I	133	D155I	134	D156I	135	D162I
136	D165I	137	D172I	138	D174I	139	D205I	140	D212I

141	D223I	142	D225I	143	D226I	144	D243I	145	D244I
146	D245I	147	D246I	148	D251I	149	D252I	150	D255I
151	D261I	152	D263I	153	D265I	154	D266I	155	D271I
156	D274I	157	D306I	158	D311I	159	D315I	160	D325I
161	D331I	162	D332I	163	D343I	164	D346I	165	D351I
166	D356I	167	D364I	168	D365I	169	D371I	170	D411I
171	D412I	172	D413I	173	D423I	174	D431I	175	D432I
176	D445I	177	D446I	178	D452I	179	D454I	180	D455I
181	D462I	182	D464I	183	D465I	184	D466I	185	D503I
186	D506I	187	D516I	188	D523I	189	D526I	190	D532I
191	D546I	192	D565I	193	D606I	194	D612I	195	D624I
196	D627I	197	D631I	198	D632I	199	D645I	200	D654I
201	D662I	202	D664I	203	D703I	204	D712I	205	D723I
206	D731I	207	D732I	208	D734I	209	D743I	210	D754I

Our high-quality product line includes:

Analog business radio

Analog professional radio

Analog amateur radio

Analog car radio

DMR Commercial Digital radio

DMR professional digital radio

DMR Digital Base Station

DMR Car Digital UHF/VHF radio

DMR Amateur Digital UHF/VHF radio

Disclaimer

The Company endeavors to achieve the accuracy and completeness of this manual, but no warranty of accuracy or reliability is given. All the specifications and designs are subject to change without notice due to continuous technological development. No part of this manual may be copied, modified, translated, or distributed in any manner without the prior written consent of the Company.

We do not guarantee, for any particular purpose, the accuracy, validity, timeliness, legitimacy or completeness of the third-party products and contents involved in this manual.

Print version: 5F_Plus_V0