Instruction Manual

Product name:Face recognition intelligent terminal

Product version: 8-A V1.0

Please read this manual carefully before use

Product description

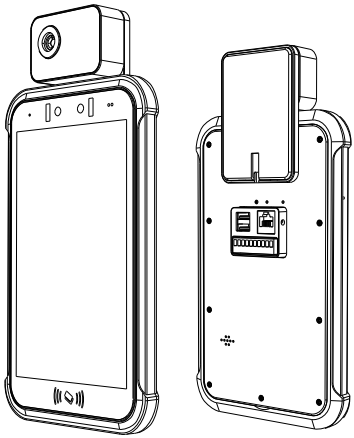

(Reference legend)

This product is aimed at the needs of large capacity, high performance, wide application, and customization in the face recognition application process. It introduces a face recognition intelligent temperature measurement hardware that can be combined with face recognition algorithms without user cooperation. Realize living body detection, human face dynamic recognition, body temperature induction measurement, warn of abnormal body temperature and remind users to put on masks to provide users with a safe environment for use.

The product is based on Rockchip RK3399, dual-core Cortex-A72 (2.0 GHz) and quad-core Cortex-A53 application processor (1.4 GHz), 200W RGB + IR binocular camera, supports WIFI + Gigabit networking and rich peripheral security interfaces, Meet the needs of user access control management, body temperature detection and identification.

The product is suitable for office areas, hotels, passage gates, office buildings, schools, shopping malls, shops, communities, public services and management, etc. where facerecognition and temperature measurement are required.

Features

High performance | Binocular camera | Distance sensing | Tricolor lamp | Infrared temperature measurement | Security interface | Multiple installation

NO.	Features	Content
1	Performed	Combined with face recognition algorithm and infrared sensor temperature measurement, it supports 10,000-level human face database.
2	Algorithm	Support the testing of domestic top AI algorithm manufacturers.
3	Speed	Combined with face recognition algorithm, face recognition and body temperature detection can be completed quickly.
4	Anti-counterfeiting	Binocular face recognition, support infrared live detection.
5	Interactive	Using TOF human detection, 8-inch ultra-clear touch screen + sound + LED light interactive prompt.
6	Surroundings	Super environmental adaptability, under low light and strong backlight, all have good performance.
7	Stable	Android or Linux system, server-level stability.
8	Open	Provide development Kit, Satisfy SI / ISVThe manufacturer's secondary development needs.

Specification and performance

Classification	Project	Parameter			
Device host	Equipment enclosure	Plastic cement,aluminium alloy		Operating system	Android 7.1
	Dimension	234mm*140mm*17.8mm			
	Processor	Rk3399 dual Cortex-A72 + four Cortex-A53 size core CPU structurer			
	RAM	2G		ROM	16GB
	Display	8" resolution 800*1280		Touch screen	8" multi-point capacitive touch screen
	Interface	Ethernet	100/1000Mbps		
		wifi	Support		
		Data interface	USB 3.0*1	RS485	RS485*1
		MIC	*1	Loudspeak	1.5W*1
		DC-IN	12V/1. 8A	Button	Reset 、 Recovery
		Access control interface	Support relay, Wiegand, RS485, NFC and face recognition access control		
	Working environment	Operating temperature	-10℃—+60℃	Storage temperature	-20℃ ~ +70℃
		Working humidity	20%-95% non-condensing	Machine strength	Max <18w
		ESD	±4kV contact; ±8Kilovolt air		
	Features	Anti-disassembly	Support	Human detection	Infrared induction
		Fill-in light	LED fill light strip (white, green, red)		
		Camera	RGB camera	200W Wide dynamic	
			Infrared camera	200 W	
Optional	IC Card	NFC (ISO14443A; ISO14443B/15693/18092			
	Algorithm	Living body detection, face recognition			
	Temperature measurement	Infrared thermal imaging temperature measurement module			

Product List

No.	content	Quantity
1	Host	*1
2	Infrared thermal imaging temperature measurement module	*1
3	Mounting bracket	*1
4	Power Adapter	*1
5	10 pin terminal	*1
6	Install screw package	*1
7	Instruction manual（qualification certificate, product warranty card）	*1

Structure diagram

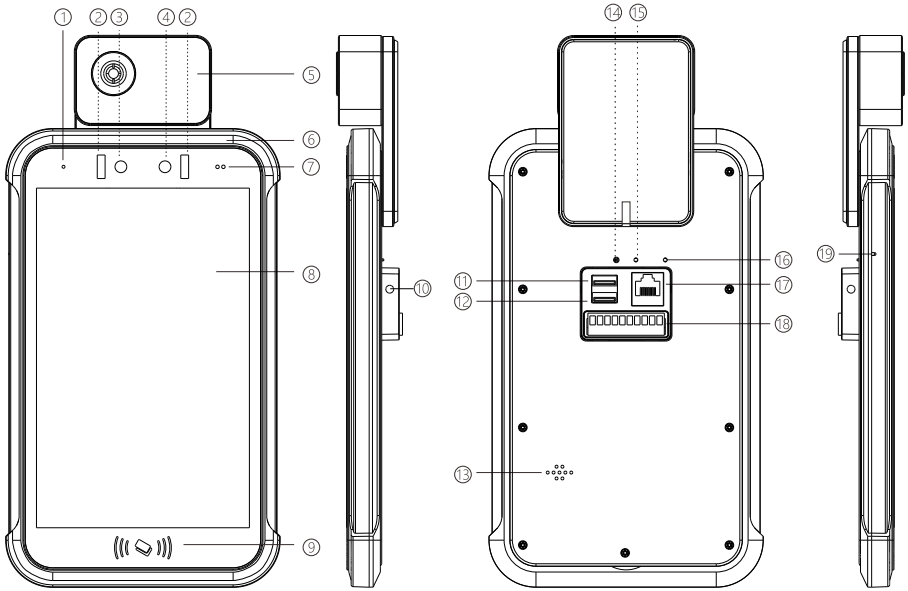

（Schematic）

No.	Explanation
①	Microphone
②	Infrared fill light
③	RGB camera
④	Infrared camera
⑤	Infrared temperature measurement module
⑥	Fill light (white：fill light, green：pass, red：fail）
⑦	Infrared sensor module
⑧	8 Inch Touch Screen
⑨	Card reading area
⑩	Fixing screw hole
⑪	USB OTG
⑫	USB 3.0
⑬	Loudspeaker
⑭	Anti disassembly
⑮	Reset button
⑯	Recovery
⑰	RJ 45
⑱	10 Pin function interface
⑲	Reset button

Wiring description

Connect positive	Interface Description			
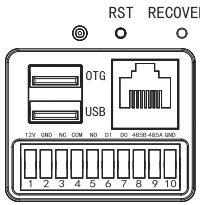	DEBUG	USB DEBUG interface		
	USB3.0	USB3.0 interface		
	Network port	1000M Network port		
	1	12V	6	D1
	2	GND	7	D0
	3	NC	8	485B
	4	COM	9	485A
	5	NO	10	GND

Note: The electric control lock needs the access control special power supply to supply separately, the condition may increase the UPS uninterrupted power supply.

Electric lock wiring

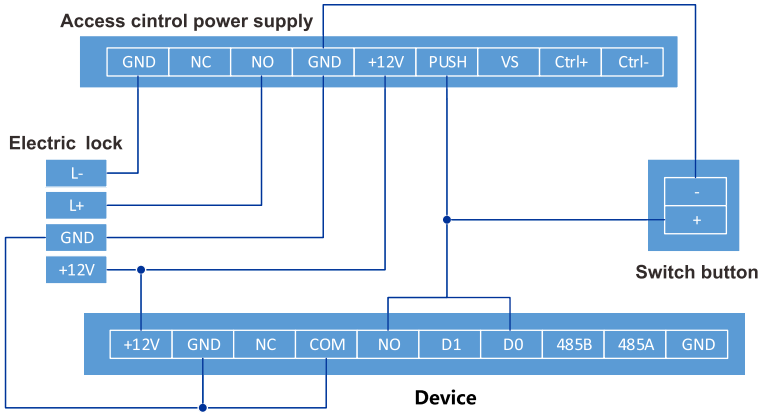

Access controller connection

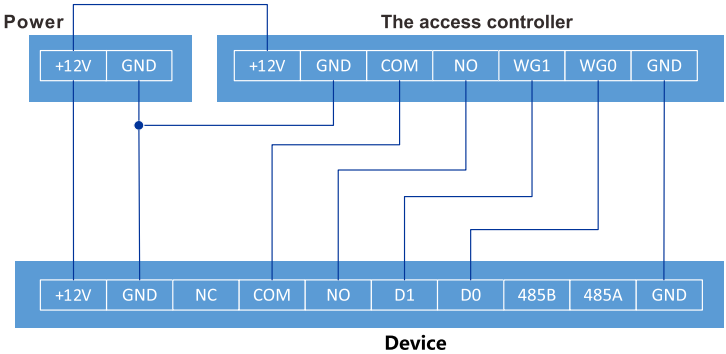

Note: The combination of NO and COM is normally open, and the combination of NC and COM is normally closed, respectively to the NO, NC and COM terminals of the access controller. The corresponding wiring mark is printed on the 10PIN interface, please refer to the actual product.

Installation instruction

Environmemt requirement

In the installation and use of this product, please strictly follow all local electrical regulations. If the equipment is not working properly, please do not disassemble and repair it by yourself, otherwise it will affect the equipment warranty. During installation and use, extreme or extreme environments such as extreme high temperature (or low temperature), high humidity, high backlight, vibration, radiation, and chemical corrosion must be avoided.

• Lighting conditions: We recommend installation in indoor or semi-outdoor environment,ensuring a well-lit environment, avoiding direct sunlight or low light affect the recognition speed,to avoid facing the glass doors or glass walls.

• Network: It is recommended to install the network open environment, to avoid the bad effectsof network identification speed and accuracy.

Precautions

Before opening the host device, the screen protector should be torn apart to avoid affecting the accuracy of the camera and infrared recognition.

Location

The recommended installation height of the device is 150cm (camera height).

Recommended staff positions

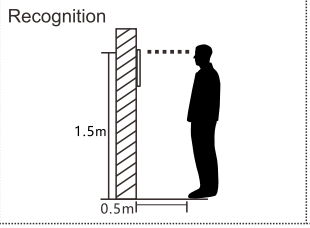

The recommended installation height (height of cameras) is 1.5m which can cover human height of 1.55m - 1.85m when the distance between the person and the panel is 0.5m.The best recognition distance is 50cm to 80cm from the device, as shown in the below image.best recognition distance is 50cm to 80cm from the device, as shown in the below image. It can be adjusted according to the effect of face image acquired by the device. When the face image is large, it can move backward properly; when the face image is small,it can move forward properly.

Recommended location

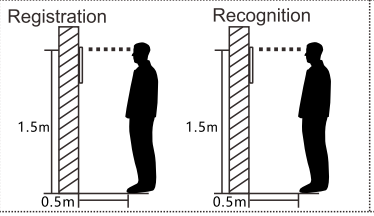

When using the device for registration and identification, the installation location of the device must remain unchanged. If you really need to move the device, you must keep the installation height consistent. If it is inconsistent, it may affect the recognition effect.It is recommended that the distance between the face and the machine at the time of registration is 0.5-0.8 meters.

Wrong usage

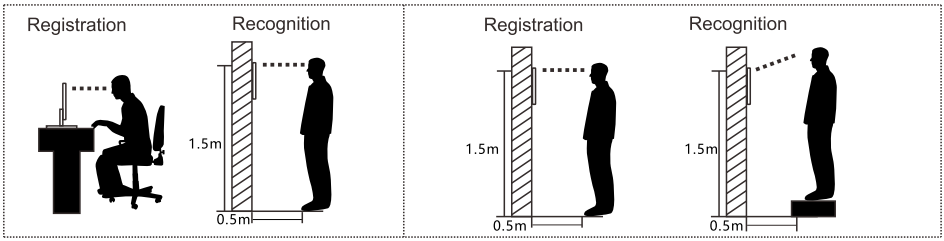

Inconsistent posture

Different height

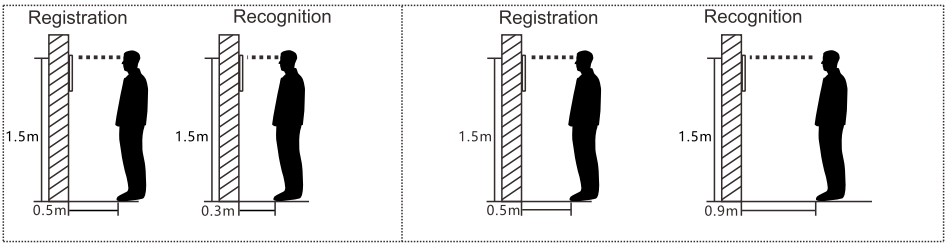

Too close

Too far

Wall-mounted installation

On the wall surface about 140cm above the ground,open a groove about 9cm in length and 5cm in depth, and select a box with a depth of 5cm to install and fix it.

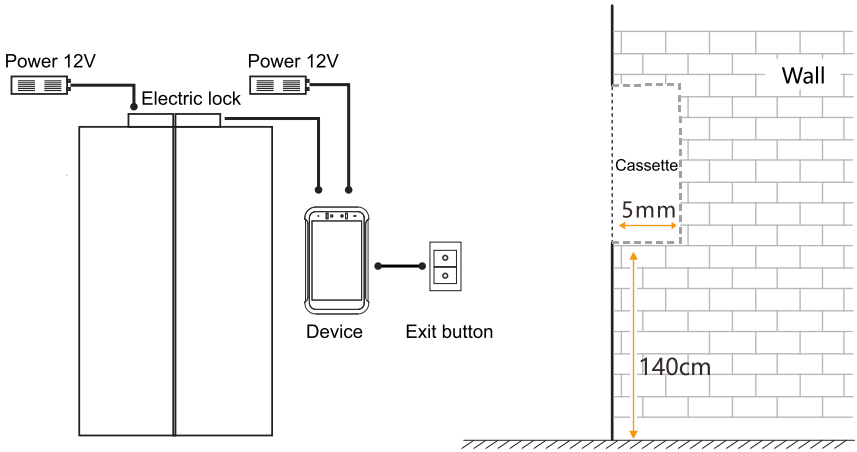

3 sets of wires need to be embedded in advance at the host equipment (reserved wire length is 10cm):

• 12V power cable RVV2 × 1.0 standard and above, one end is at the host device, and the other end is pulled to the original access control dedicated power supply or the 220V power supply 3 hole socket on the top of the sliding door,When installing,connect to the 12V end of the factory supplied 12V1.8A power adapter. The 220V power cable of the adapter is directly plugged into the 220V power supply 3-hole socket.

• Door opening control line RVV2 × 0.5 standard and above, one end is at the host device, and the other end is pulled to the original access control dedicated power supply or the top controller of the sliding door, and connected to their door opening signal interface during installation.

• Cat5e network cable 8 × 0.5 oxygen-free copper standard and above, one end is at the host device, and the other end is pulled to the weak motor room switch, and connected to the Internet during installation. If it is difficult to increase the wired network, you can consider using wireless when the wireless network is stable.

Installation steps

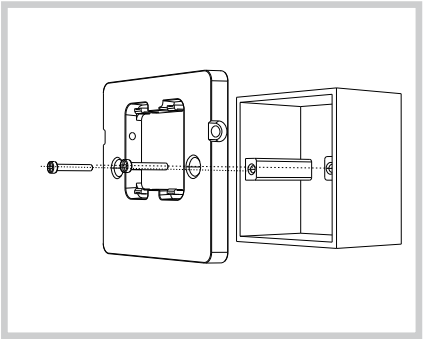

1：Fixed. Fix the wall-mounting accessories to the side wall with screws 86 on the box.

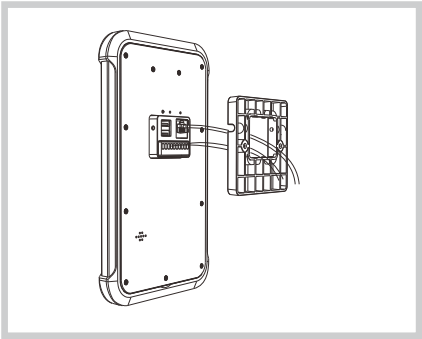

2:Connection. Refer to the "Wiring Instructions" to connect the network cable and power cable to the device.

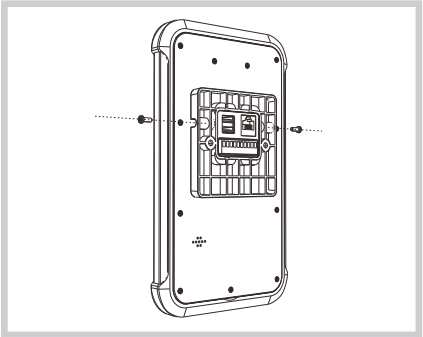

3: Adjust. Adjust the wiring length until the device can be snapped into the wall-mounting accessory.

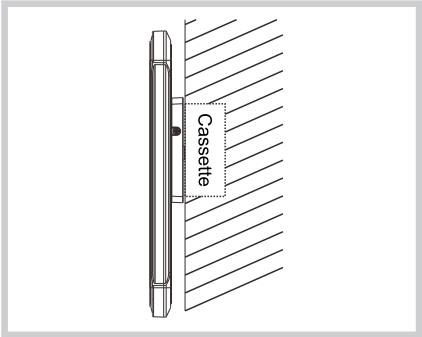

4: Lock tightly. Use screws to mount the accessories on the wall to lock the device on both sides. Complete equipment installation

Declaration of toxic and harmful substances

Part name	Harmful substances or elements					
	(Pb)	(Hg)	(Cd)	(Cr(VI))	(PBB)	(PBDE)
Shell	○	○	○	○	○	○
Circuit board	○	○	○	○	○	○
Power adapter	○	○	○	○	○	○

This table is compiled according SJ/T11364

○	Indicates that the content of the harmful substance in the part is under the limit specified in GB/T26572
X	Indicates that the content of the hazardous substance in the component exceeds the limit specified in GB/T26572
10	This marking period is 10 years,Under normal use conditions,hazardous substancesin electronic and electrical products will not leak or mutate,and will not cause seriousenvironmental pollution or cause serious damage to personal and property safety. This product meets RoHS environmental requirements.

Product warranty card

Thank you for purchasing our products. I guarantee the interests of our customers. If the products of our company fail due to quality problems, they can contact the local dealers with the invoice and warranty card.

Warranty notice:

1.Within one year from the date of purchase, in case of failure under normal use, the company will provide free warranty, parts replacement and other services according to the fault conditions.

2. The warranty card and purchase invoice are the certificates for our company to provide after-sales service to customers. This card is valid after the following forms are filled in in in detail and stamped with the official seal of the dealer.

3. Under one of the following circumstances, free warranty service is not implemented, and maintenance is required at a charge;

(1) Beyond the validity of the warranty.

(2) Damage caused by improper use, maintenance or storage not in accordance with the requirements of the product manual.

(3) Failure and damage caused by dismantling, repairing and refitting products without permission of our company.

(4) Mechanical failure or damage caused by force majeure.

(5) Wearing parts and random accessories.

Purchase date: M D Y

Commodity information	Trade name		Factory number	
	Product model		Date of manufacture	
Customer information	Unit name		Contacts	
	Address		Contact number	
Sales information	Name of seller		Contacts	
	Address		Contact number	
	Date of sale		Invoice number	

Maintenance records	Fault condition	Maintenance results	Customer signature	Signature of maintainer	Date

This card is issued with the goods, one card for each machine. In order to ensure that you can fully enjoy the right of free warranty service provided by our company, please keep this card properly and do not make up for it if it is lost.

FCC warning statements:

This equipment has been tested and found to comply with the limits for a Class B digital device, pursuant to part 15 of the FCC Rules. These limits are designed to provide reasonable protection against harmful interference in a residential installation. This equipment generates, uses and can radiate radio frequency energy and, if not installed and used in accordance with the instructions, may cause harmful interference to radio communications. However, there is no guarantee that interference will not occur in a particular installation. If this equipment does cause harmful interference to radio or television reception, which can be determined by turning the equipment off and on, the user is encouraged to try to correct the interference by one or more of the following measures:

- Reorient or relocate the receiving antenna.
- Increase the separation between the equipment and receiver.
- Connect the equipment into an outlet on a circuit different from that to which the receiver is connected.
- Consult the dealer or an experienced radio/TV technician for help.

Caution: Any changes or modifications to this device not explicitly approved by manufacturer could void your authority to operate this equipment.

This device complies with part 15 of the FCC Rules. Operation is subject to the following two conditions: (1) This device may not cause harmful interference, and (2) this device must accept any interference received, including interference that may cause undesired operation.

The device has been evaluated to meet general RF exposure requirement. This equipment complies with FCC radiation exposure limits set forth for an uncontrolled environment. This equipment should be installed and operated with minimum distance 20cm between the radiator & your body.

IC warning statements:

-English Warning Statement:

This device contains licence-exempt transmitter(s)/receiver(s) that comply with Innovation, Science and Economic Development Canada’s licenceexempt RSS(s). Operation is subject to the following two conditions:
(1)This device may not cause interference.
(2)This device must accept any interference, including interference that may cause undesired operation of the device.

Cet appareil contient des émetteurs / récepteurs exemptés de licence conformes aux RSS (RSS)d'Innovation, Sciences et Développement économique Canada. Le fonctionnement est soumis auxdeux conditions suivantes :
(1) Cet appareil ne doit pas causer d'interférences.
(2) Cet appareil doit accepter toutes les interférences, y compris celles susceptibles deprovoquer un fonctionnement indésirable de l'appareil.

This device complies with ISED RF radiation exposure limits set forth for an uncontrolled environment.
This device must be installed and operated with a minimum distance of 20 cm between the radiator and user body.
Le présent appareil doit être installé et exploité à une distance minimale de 20 cm entre le radiateur et les corps.