FCC Radio Test Report

FCC ID: 2AYGCCHL-LX3

This report concerns: Original Grant

Project No.	:	2012C016
Equipment	:	Smart Phone
Brand Name	:	HONOR
Test Model	:	CHL-LX3
Series Model	:	N/A
Applicant	:	Honor Device Co., Ltd.
Address	:	Suite 3401, Unit A, Building 6, Shum Yip Sky Park, No. 8089, Hongli West Road, Xiangmihu Street, Futian District, Shenzhen, Guangdong 518040, People's Republic of China
Manufacturer	:	Honor Device Co., Ltd.
Address	:	Suite 3401, Unit A, Building 6, Shum Yip Sky Park, No. 8089, Hongli West Road, Xiangmihu Street, Futian District, Shenzhen, Guangdong 518040, People's Republic of China
Date of Receipt	:	Dec. 04, 2020
Date of Test	:	Dec. 05, 2020 ~ Feb. 05, 2021
Issued Date	:	Mar. 01, 2021
Report Version	:	R00
Test Sample	:	Engineering Sample No.: DG20201210166 for conducted, DG20201210169 for radiated.
Standard(s)	:	47 CFR FCC Part 24 Subpart E 47 CFR FCC Part 2 ANSI/TIA/EIA-603-E-2016 FCC KDB 971168 D01 Power Meas License Digital Systems v03r01

The above equipment has been tested and found compliance with the requirement of the relative standards by BTL Inc.

Vegeta Li

Prepared by : Vegeta Li

Steven Lu

Approved by : Steven Lu

Certificate #5123.02

Add: No.3, Jinshagang 1st Road, Shixia, Dalang Town,Dongguan, Guangdong, China.
Tel: +86-769-8318-3000
Web: www.newbtl.com

Declaration

BTL represents to the client that testing is done in accordance with standard procedures as applicable and that test instruments used has been calibrated with standards traceable to international standard(s) and/or national standard(s).

BTL's reports apply only to the specific samples tested under conditions. It is manufacture's responsibility to ensure that additional production units of this model are manufactured with the identical electrical and mechanical components. **BTL** shall have no liability for any declarations, inferences or generalizations drawn by the client or others from **BTL** issued reports.

The report must not be used by the client to claim product certification, approval, or endorsement by NIST, A2LA, or any agency of the U.S. Government.

This report is the confidential property of the client. As a mutual protection to the clients, the public and ourselves, the test report shall not be reproduced, except in full, without our written approval.

BTL's laboratory quality assurance procedures are in compliance with the **ISO/IEC 17025** requirements, and accredited by the conformity assessment authorities listed in this test report.

BTL is not responsible for the sampling stage, so the results only apply to the sample as received.

The information, data and test plan are provided by manufacturer which may affect the validity of results, so it is manufacturer's responsibility to ensure that the apparatus meets the essential requirements of applied standards and in all the possible configurations as representative of its intended use.

Limitation

For the use of the authority's logo is limited unless the Test Standard(s)/Scope(s)/Item(s) mentioned in this test report is (are) included in the conformity assessment authorities acceptance respective.
Please note that the measurement uncertainty is provided for informational purpose only and is not use in determining the Pass/Fail results.

Table of Contents Page

REPORT ISSUED HISTORY 5

1 . SUMMARY OF TEST RESULTS 6

1.1 TEST FACILITY 7

1.2 MEASUREMENT UNCERTAINTY 7

1.3 TEST ENVIRONMENT CONDITIONS 7

2 . GENERAL INFORMATION 8

2.1 GENERAL DESCRIPTION OF EUT 8

2.2 DESCRIPTION OF TEST MODES 12

2.3 BLOCKDIGRAMSHOWINGTHECONFIGURATIONOFSYSTEMTESTED 14

3.4 DESCRIPTION OF SUPPORT UNITS 14

3 . TEST RESULT 15

3.1 OUTPUT POWER MEASUREMENT 15

3.1.1 LIMIT 15

3.1.2 TEST PROCEDURE 15

3.1.3 TEST SETUP LAYOUT 15

3.1.4 TEST DEVIATION 15

3.1.5 TEST RESULTS 15

3.2 OCCUPIED BANDWIDTH MEASUREMENT 16

3.2.1 TEST PROCEDURE 16

3.2.2 TEST SETUP LAYOUT 16

3.2.3 TEST DEVIATION 16

3.2.4 TEST RESULTS 16

3.3 CONDUCTED SPURIOUS EMISSIONS MEASUREMENT 17

3.3.1 LIMIT 17

3.3.2 TEST PROCEDURES 17

3.3.3 TEST SETUP LAYOUT 17

3.3.4 TEST DEVIATION 17

3.3.5 TEST RESULTS 17

3.4 RADIATED SPURIOUS EMISSIONS MEASUREMENT 18

3.4.1 LIMIT 18

3.4.2 TEST PROCEDURES 18

3.4.3 TEST SETUP LAYOUT 19

3.4.4 TEST DEVIATION 20

3.4.5 TEST RESULTS (9KHZ TO 30MHZ) 20

3.4.6 TEST RESULTS (30MHZ TO 1000MHZ) 20

3.4.7 TEST RESULTS (ABOVE 1000MHZ) 20

3.5 BAND EDGE MEASUREMENT 21

3.5.1 LIMIT 21

3.5.2 TEST PROCEDURES 21

Table of Contents Page

3.5.3 TEST SETUP LAYOUT 21
3.5.4 TEST DEVIATION 21
3.5.5 TEST RESULTS 21
3.6 PEAK TO AVERAGE RATIO MEASUREMENT 22
3.6.1 LIMIT 22
3.6.2 TEST PROCEDURES 22
3.6.3 TEST SETUP LAYOUT 22
3.6.4 TEST DEVIATION 22
3.6.5 TEST RESULTS 22
3.7 FREQUENCY STABILITY MEASUREMENT 23
3.7.1 LIMIT 23
3.7.2 TEST PROCEDURES 23
3.7.3 TEST SETUP LAYOUT 23
3.7.4 TEST DEVIATION 23
3.7.5 TEST RESULTS 23
4. LIST OF MEASUREMENT EQUIPMENTS 24
APPENDIX A - OUTPUT POWER 26
APPENDIX B - OCCUPIED BANDWIDTH 43
APPENDIX C - CONDUCTED SPURIOUS EMISSIONS 61
APPENDIX D - RADIATED SPURIOUS EMISSIONS (9KHZ TO 30MHZ) 67
APPENDIX E - RADIATED SPURIOUS EMISSIONS (30MHZ TO 1000MHZ) 72
APPENDIX C - RADIATED SPURIOUS EMISSIONS (ABOVE 1000MHZ) 97
APPENDIX G - BAND EDGE 144
APPENDIX H - PEAK TO AVERAGE RATIO 153
APPENDIX I - FREQUENCY STABILITY 164

REPORT ISSUED HISTORY

Report Version	Description	Issued Date
R00	Original Issue.	Mar. 01, 2021

1. SUMMARY OF TEST RESULTS

Test procedures according to the technical standard(s):

FCC Part 24 Subpart E & Part 2			
Standard(s) Section	**Test Item**	**Judgment**	**Remark**
2.1046 24.232(c)	Equivalent Isotropic Radiated Power	PASS	------
2.1049	Occupied Bandwidth	PASS	------
2.1051 24.238(a)	Conducted Spurious Emissions	PASS	------
2.1053 24.238(a)	Radiated Spurious Emissions	PASS	------
24.238(a)	Band Edge Measurements	PASS	------
24.232(d)	Peak To Average Ratio	PASS	------
2.1055 24.235	Frequency Stability	PASS	------

Note:

(1) “N/A” denotes test is not applicable in this test report.

1.1 TEST FACILITY

The test facilities used to collect the test data in this report is at the location of No.3, Jinshagang 1st Road, Shixia, Dalang Town, Dongguan, Guangdong, China.
BTL's Test Firm Registration Number for FCC: 357015
BTL's Designation Number for FCC: CN1240

1.2 MEASUREMENT UNCERTAINTY

ISO/IEC 17025 requires that an estimate of the measurement uncertainties associated with the emissions test results be included in the report. The measurement uncertainties given below are based on a 95% confidence level (based on a coverage factor (k=2))
The BTL measurement uncertainty as below table:

A. Radiated Measurement:

Test Site	Method	Measurement Frequency Range	Ant. H / V	U,(dB)
DG-CB03 (3m)	CISPR	9KHz ~ 30MHz	V	3.79
		9KHz ~ 30MHz	H	3.57
		30MHz ~ 200MHz	V	4.88
		30MHz ~ 200MHz	H	4.14
		200MHz ~ 1,000MHz	V	4.62
		200MHz ~ 1,000MHz	H	4.80

Test Site	Method	Measurement Frequency Range	U,(dB)
DG-CB03 (3m)	CISPR	1GHz ~ 6GHz	4.58
		6GHz ~ 18GHz	5.18

B. Other Measurement:

Parameter	Uncertainty
Spectrum Bandwidth	±3.8 %
Maximum Output Power	±0.95 dB
Power Spectral Density	±0.86 dB
Frequency Stability	±0.16 dB
Temperature	±0.08 °C
Time	±0.58 %
Supply voltages	±0.3 %

Note: Unless specifically mentioned, the uncertainty of measurement has not been taken into account to declare the compliance or non-compliance to the specification.

1.3 TEST ENVIRONMENT CONDITIONS

Test Item	Temperature	Humidity	Test Voltage	Tested By
Output Power & ERP	23.1°C	47%	DC 3.87V	Tate Liu
Occupied Bandwidth	23.1°C	47%	DC 3.87V	Tate Liu
Conducted Spurious Emissions	23.1°C	47%	DC 3.87V	Tate Liu
Radiated Spurious Emissions	26°C	52%	AC 120V/60Hz	Jakyri Wen
Band Edge	23.1°C	47%	DC 3.87V	Tate Liu
Peak to Average Ratio	23.1°C	47%	DC 3.87V	Tate Liu
Frequency Stability	Normal & Extreme	47%	Normal & Extreme	Tate Liu

2. GENERAL INFORMATION

2.1 GENERAL DESCRIPTION OF EUT

Equipment	Smart Phone				
Brand Name	HONOR				
Test Model	CHL-LX3				
Series Model	N/A				
Model Difference(s)	N/A				
Hardware Version	HL3CHLM				
Software Version	5.0.0.80(C900E76R1P4)				
Power Source	1# DC voltage supplied from AC adapter. 2# Supplied from battery. 3# Supplied from USB port.				
Power Rating	1# (1) I/P: 100-240V ~ 50/60Hz, 1.2A O/P: 5V ⎓ 2A OR 9V ⎓ 2V OR 10V ⎓ 4A (2) I/P: 100-240V ~ 50/60Hz, 0.75A O/P: 5V ⎓ 2A OR 9V ⎓ 2V OR 10V ⎓ 2.25A 2# DC 3.87V, 3900mAh 3# DC 5V				
IEMI No.	Radiated	863891050002714			
	Conducted	863891050003043			
Modulation Type	GSM	GMSK			
	EDGE/GPRS	GMSK, 8PSK			
	WCDMA/HSDPA/HSUPA	UL: QPSK DL: QPSK, 16QAM			
	LTE	UL: QPSK,16QAM DL: QPSK,16QAM, 64QAM			
Max. EIRP	GSM 1900 / GPRS 1900	GMSK	26.65	dBm	
	EDGE 1900	8PSK	22.50	dBm	
	WCDMA Band II	QPSK	19.75	dBm	
	HSDPA Band II	QPSK	18.48	dBm	
	HSUPA Band II	QPSK	17.56	dBm	
	LTE	Channel Bandwidth (MHz)	QPSK (dBm)	16QAM (dBm)	
	Band 2	1.4	19.29	18.83	
		3	19.29	18.79	
		5	19.22	18.86	
		10	19.31	18.83	
		15	19.18	18.79	
		20	19.26	19.00	

Note:
1. For a more detailed features description, please refer to the manufacturer's specifications or the user's manual.

2. Channel List:

PCS 1900				
Test Frequency ID	UARFCN	Frequency of Uplink (MHz)	UARFCN	Frequency of Downlink (MHz)
Low Range	512	1850.2	528	1930.2
Mid Range	661	1880	677	1960
High Range	810	1909.8	826	1989.8

WCDMA Band II				
Test Frequency ID	UARFCN	Frequency of Uplink (MHz)	UARFCN	Frequency of Downlink (MHz)
Low Range	9262	1852.4	9662	1932.4
Mid Range	9400	1880.0	9800	1960.0
High Range	9538	1907.6	9938	1987.6

LTE Band 2					
Test Frequency ID	Bandwidth (MHz)	N_{UL}	Frequency of Uplink (MHz)	N_{DL}	Frequency of Downlink (MHz)
Low Range	1.4	18607	1850.7	607	1930.7
	3	18615	1851.5	615	1931.5
	5	18625	1852.5	625	1932.5
	10	18650	1855	650	1935
	15	18675	1857.5	675	1937.5
	20	18700	1860	700	1940
Mid Range	1.4/3/5/10/15/20	18900	1880	900	1960
High Range	1.4	19193	1909.3	1193	1989.3
	3	19185	1908.5	1185	1988.5
	5	19175	1907.5	1175	1987.5
	10	19150	1905	1150	1985
	15	19125	1902.5	1125	1982.5
	20	19100	1900	1100	1980

3. Table for Filed Antenna:

Main Antenna

Brand	Model Name	Antenna Type	Connector	Gain (dBi)	Note
N/A	N/A	Internal	N/A	-3.5	PCS 1900
N/A	N/A	Internal	N/A	-3.5	WCDMA Band II
N/A	N/A	Internal	N/A	-3.5	LTE Band 2

Second Antenna

Brand	Model Name	Antenna Type	Connector	Gain (dBi)	Note
N/A	N/A	Internal	N/A	-2.6	PCS 1900
N/A	N/A	Internal	N/A	-2.6	WCDMA Band II
N/A	N/A	Internal	N/A	-2.6	LTE Band 2

Note: The antenna gain is provided by the manufacturer.

4. The EUT contains following accessory devices:

Items	Trademark / Manufacturer / Factory	Model Name	Description
Adapter	Honor Device Co., Ltd.	HW-100400E01 HW-100400U01 HW-100400B01 HW-100400A01	I/P: 100-240V ~50/60Hz, 1.2A O/P: 5V ⎓ 2A OR 9V ⎓ 2V OR 10V ⎓ 4A
		HW-100400E02 HW-100400U02 HW-100400B02 HW-100400A02	
	Honor Device Co., Ltd. (Manufacturer: BYD / Huntkey / Phitek)	HW-100225E00	I/P: 100-240V ~50/60Hz, 0.75A O/P: 5V ⎓ 2A OR 9V ⎓ 2V OR 10V ⎓ 2.25A
	Honor Device Co., Ltd. (Manufacturer: BYD / Huntkey)	HW-100225U00 HW-100225B00 HW-100225A00	
Rechargeable Li-ion Battery	Honor Device Co., Ltd. (Manufacturer: Sunwoda / Desay / SCUD)	HB446589EFW	DC 3.87V, 3900mAh
	Honor Device Co., Ltd. (Manufacturer: Sunwoda / Desay / SCUD / NVT)	HB446588EFW	
Earphone/ Headset	Jiangxi Lianchuang Hongsheng Electronic Co., LTD.	MEND1532B528A11	/
	BOLUO COUNTY QUANCHENG ELECTRONIC CO.,LTD.	1293-3283-3.5mm-339	
	FOXCONN INTERCONNECT TECHNOLOGY LIMITED	EPAB542-2WH05-DH	
Data Cable	NingBo Broad Telecommunication Co., Ltd.	WA0046	/
	Freeport Resources Enterprises Corp.	AU2-CHO006HF	
	MING JI ELECTRONICS CO., LTD.	213-00989-0	
	LUXSHARE PRECISION INDUSTRY CO., LTD.	L99UC138-CS-H	
	Freeport Resources Enterprises(JIANGXI) CO., LTD	18-93C2CHO-001HF	
	NingBo Broad Telecommunication Co., Ltd.	WA0020	
	LUXSHARE PRECISION INDUSTRY CO., LTD.	L99UC131-CS-H	
	MING JI ELECTRONICS CO., LTD.	203-1572-0	
	FUYU ELECTRONICAL TECHNOLOGY(HUAIAN)CO., LTD.	CUDU01B-HC295-EH	

*Adapter HW-100400E01, HW-100400U01, HW-100400B01 and HW-100400A01 have same board.
Adapter HW-100400E02, HW-100400U02, HW-100400B02 and HW-100400A02 have same board.

2.2 DESCRIPTION OF TEST MODES

Following mode(s) is (were) found to be the worst case(s) and selected for the final test.

GSM MODE			
Test Item	Available Channel	Tested Channel	Mode
Output Power & EIRP	512 to 810	512, 661, 810	GSM, GPRS, EDGE
Occupied Bandwidth	512 to 810	512, 661, 810	GSM, EDGE
Conducted Spurious Emissions	512 to 810	661	GSM, EDGE
Radiated Spurious Emissions	512 to 810	661	GSM
Band Edge	512 to 810	512, 810	GSM, EDGE
Peak to Average Ratio	512 to 810	512, 661, 810	GSM, EDGE
Frequency Stability	512 to 810	661	GSM

WCDMA BAND II MODE			
Test Item	Available Channel	Tested Channel	Mode
Output Power & EIRP	9262 to 9538	9262, 9400, 9538	WCDMA, HSDPA,HSUPA
Occupied Bandwidth	9262 to 9538	9262, 9400, 9538	WCDMA, HSDPA,HSUPA
Conducted Spurious Emissions	9262 to 9538	9400	WCDMA
Radiated Spurious Emissions	9262 to 9538	9400	WCDMA
Band Edge	9262 to 9538	9262, 9538	WCDMA, HSDPA, HSUPA
Peak to Average Ratio	9262 to 9538	9262, 9400, 9538	WCDMA, HSDPA, HSUPA
Frequency Stability	9262 to 9538	9400	WCDMA

LTE BAND 2 MODE					
Test Item	Available Channel	Tested Channel	Channel Bandwidth	Modulation	Mode
Output Power & EIRP	18607 to 19193	18607, 18900, 19193	1.4MHz	QPSK, 16QAM	1RB/3RB/6RB
	18615 to 19185	18615 , 18900, 19185	3MHz	QPSK, 16QAM	1RB/8RB/15RB
	18625 to 19175	18625, 18900, 19175	5MHz	QPSK, 16QAM	1RB/12RB/25RB
	18650 to 19150	18650, 18900, 19150	10MHz	QPSK, 16QAM	1RB/25RB/50RB
	18675 to 19125	18675, 18900, 19125	15MHz	QPSK, 16QAM	1RB/36RB/75RB
	18700 to 19100	18700, 18900, 19100	20MHz	QPSK, 16QAM	1RB/50RB/100RB
Occupied Bandwidth	18607 to 19193	18607, 18900, 19193	1.4MHz	QPSK, 16QAM	6RB
	18615 to 19185	18615 , 18900, 19185	3MHz	QPSK, 16QAM	15RB
	18625 to 19175	18625, 18900, 19175	5MHz	QPSK, 16QAM	25RB
	18650 to 19150	18650, 18900, 19150	10MHz	QPSK, 16QAM	50RB
	18675 to 19125	18675, 18900, 19125	15MHz	QPSK, 16QAM	75 RB
	18700 to 19100	18700, 18900, 19100	20MHz	QPSK, 16QAM	100RB
Conducted Spurious Emissions	18607 to 19193	18900	1.4 MHz	QPSK	1RB
	18625 to 19175	18900	5MHz	QPSK	1RB
	18700 to 19100	18900	20MHz	QPSK	1RB
Radiated Spurious Emissions	18607 to 19193	18900	1.4 MHz	QPSK	1RB
	18625 to 19175	18900	5MHz	QPSK	1RB
	18700 to 19100	18900	20MHz	QPSK	1RB
Band Edge	18607 to 19193	18607, 19193	1.4MHz	QPSK	1RB/6RB
	18615 to 19185	18615, 19185	3MHz	QPSK	1RB/15RB
	18625 to 19175	18625, 19175	5MHz	QPSK	1RB/25RB
	18650 to 19150	18650, 19150	10MHz	QPSK	1RB/50RB
	18675 to 19125	18675, 19125	15MHz	QPSK	1RB/75RB
	18700 to 19100	18700, 19100	20MHz	QPSK	1RB/100RB
Peak To Average Ratio	18607 to 19193	18607, 18900, 19193	1.4MHz	QPSK, 16QAM	1RB
	18615 to 19185	18615 , 18900, 19185	3MHz	QPSK, 16QAM	1RB
	18625 to 19175	18625, 18900, 19175	5MHz	QPSK, 16QAM	1RB
	18650 to 19150	18650, 18900, 19150	10MHz	QPSK, 16QAM	1RB
	18675 to 19125	18675, 18900, 19125	15MHz	QPSK, 16QAM	1RB
	18700 to 19100	18700, 18900, 19100	20MHz	QPSK, 16QAM	1RB
Frequency Stability	18607 to 19193	18900	1.4MHz	QPSK	1RB
	18615 to 19185	18900	3MHz	QPSK	1RB
	18625 to 19175	18900	5MHz	QPSK	1RB
	18650 to 19150	18900	10MHz	QPSK	1RB
	18675 to 19125	18900	15MHz	QPSK	1RB
	18700 to 19100	18900	20MHz	QPSK	1RB

2.3 BLOCKDIGRAMSHOWINGTHECONFIGURATIONOFSYSTEMTESTED

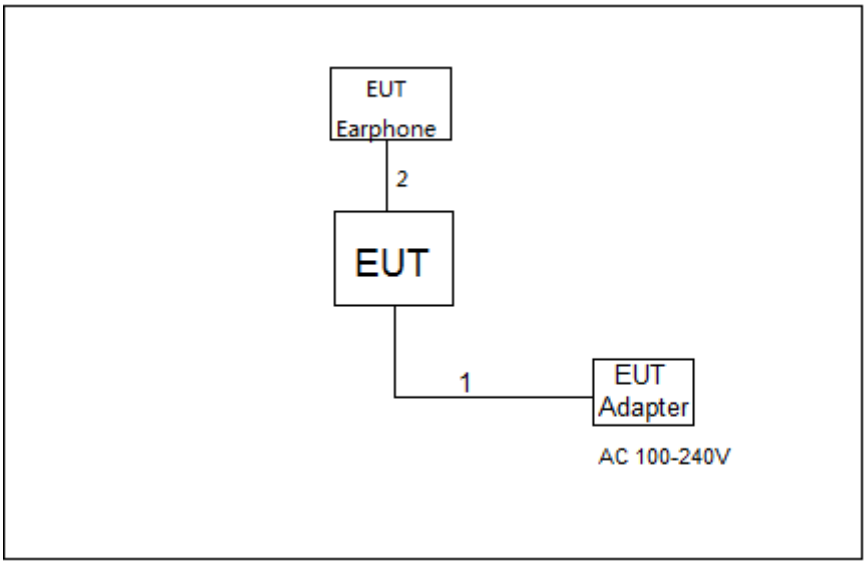

3.4 DESCRIPTION OF SUPPORT UNITS

The EUT has been tested as an independent unit together with other necessary accessories or support units. The following support units or accessories were used to form a representative test configuration during the tests.

Item	Equipment	Mfr/Brand	Model/Type No.	Series No.
-	-	-	-	-

Item	Cable Type	Shielded Type	Ferrite Core	Length
1	USB Cable	YES	NO	1m
2	Audio Cable	NO	NO	1.1m

3. TEST RESULT

3.1 OUTPUT POWER MEASUREMENT

3.1.1 LIMIT

Mobile / Portable station are limited to 2 watts e.i.r.p.

3.1.2 TEST PROCEDURE

The testing follows FCC KDB 971168 v03r01 Section 5.

EIRP:

EIRP = Output Power + Antenan gain

Output Power:

The EUT was set up for the maximum power with GSM, GPRS, EDGE, WCDMA and LTE link data modulation and link up with simulator. Set the EUT to transmit under low, middle and high channel and record the power level shown on simulator.

3.1.3 TEST SETUP LAYOUT

Output Power Measurement

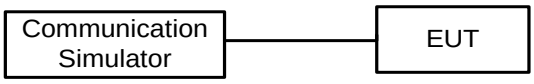

3.1.4 TEST DEVIATION

No deviation

3.1.5 TEST RESULTS

Please refer to the APPENDIX A.

3.2 OCCUPIED BANDWIDTH MEASUREMENT

3.2.1 TEST PROCEDURE

The testing follows FCC KDB 971168 v03r01 Section 4.

1. The EUT makes a call to the communication simulator. All measurements were done at low, middle and high operational frequency range. The communication simulator station system controlled a EUT to export maximum output power under transmission mode and specific channel frequency. Use OBW measurement function of Spectrum analyzer to measure 99 % occupied bandwidth and 26dB bandwidth.
2. The EUT was connected to spectrum analyzer and system simulator via a power divider.
3. RBW=(1% ~ 5%)*EBW
   VBW⩾3* RBW
4. Set spectrum analyzer with Peak detector.

3.2.2 TEST SETUP LAYOUT

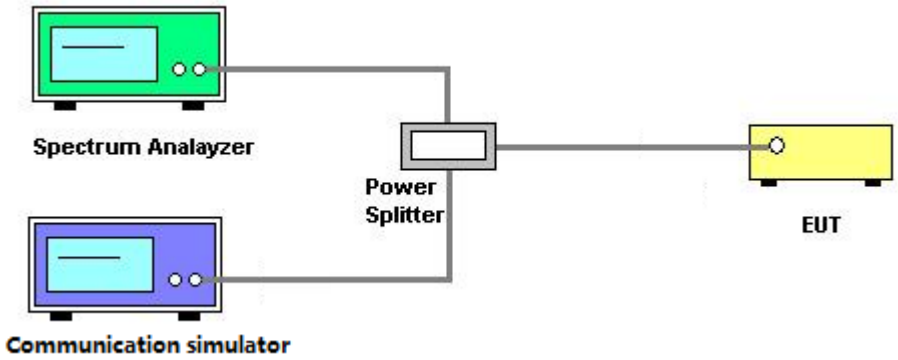

3.2.3 TEST DEVIATION

No deviation

3.2.4 TEST RESULTS

Please refer to the APPENDIX B.

3.3 CONDUCTED SPURIOUS EMISSIONS MEASUREMENT

3.3.1 LIMIT

The power of any emission outside of the authorized operating frequency ranges must be attenuated below the transmitting power (P) by a factor of at least 43 + 10 log(P) dB. The emission limit equal to -13dBm.

3.3.2 TEST PROCEDURES

The testing follows FCC KDB 971168 v03r01 Section 6.

1. The EUT was connected to spectrum analyzer and system simulator via a power divider.
2. The band edges of low and high channels for the highest RF powers were measured. Set RBW>=1% EBW in the 1MHz band immediately outside and adjacent to the band edge.
3. Set spectrum analyzer with Peak detector.
4. The RF fundamental frequency should be excluded against the limit line in the operating frequency band.

3.3.3 TEST SETUP LAYOUT

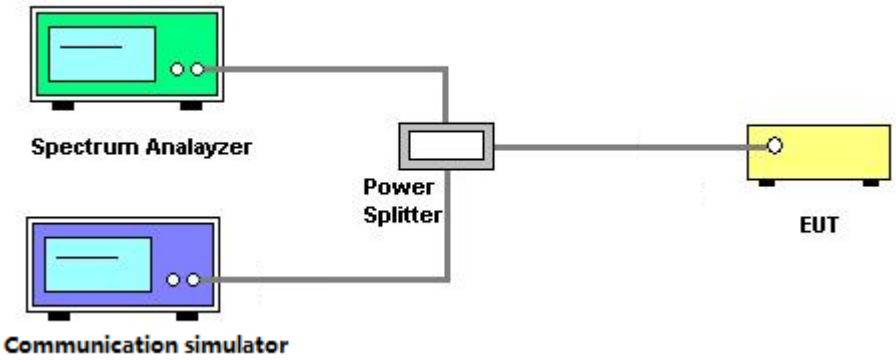

3.3.4 TEST DEVIATION

No deviation

3.3.5 TEST RESULTS

Please refer to the APPENDIX C.

3.4 RADIATED SPURIOUS EMISSIONS MEASUREMENT

3.4.1 LIMIT

The power of any emission outside of the authorized operating frequency ranges must be attenuated below the transmitting power (P) by a factor of at least 43 + 10 log(P) dB. The emission limit equal to -13dBm.

3.4.2 TEST PROCEDURES

The testing follows FCC KDB 971168 v03r01 Section 6.2.

1. In the semi-anechoic chamber, EUT placed on the 0.8m height of Turn Table, rotated the table around 360 degrees to search the maximum radiation power and receiver antenna shall be rotated vertical and horizontal polarization and moved height from 1m to 4m to find the maximum polar radiated power. The “Read Value” is the spectrum reading the maximum power value.
2. The substitution horn antenna is substituted for EUT at the same position and signals generator export the CW signal to the substitution antenna via a TX cable. Rotated the Turn Table and moved receiving antenna to find the maximum radiation power. Adjust output power level of S.G to get a Value of spectrum reading equal to “Read Value “ of step a. Record the power level of S.G
3. EIRP = Output power level of S.G – TX cable loss + Antenna gain of substitution horn.
4. ERP can be calculated form EIRP by subtracting the gain of dipole, ERP = EIPR - 2.15dBi.
5. The resolution bandwidth and video bandwidth of test receiver/spectrum analyzer is 1MHz/3MHz.

3.4.3 TEST SETUP LAYOUT

Below 30MHz

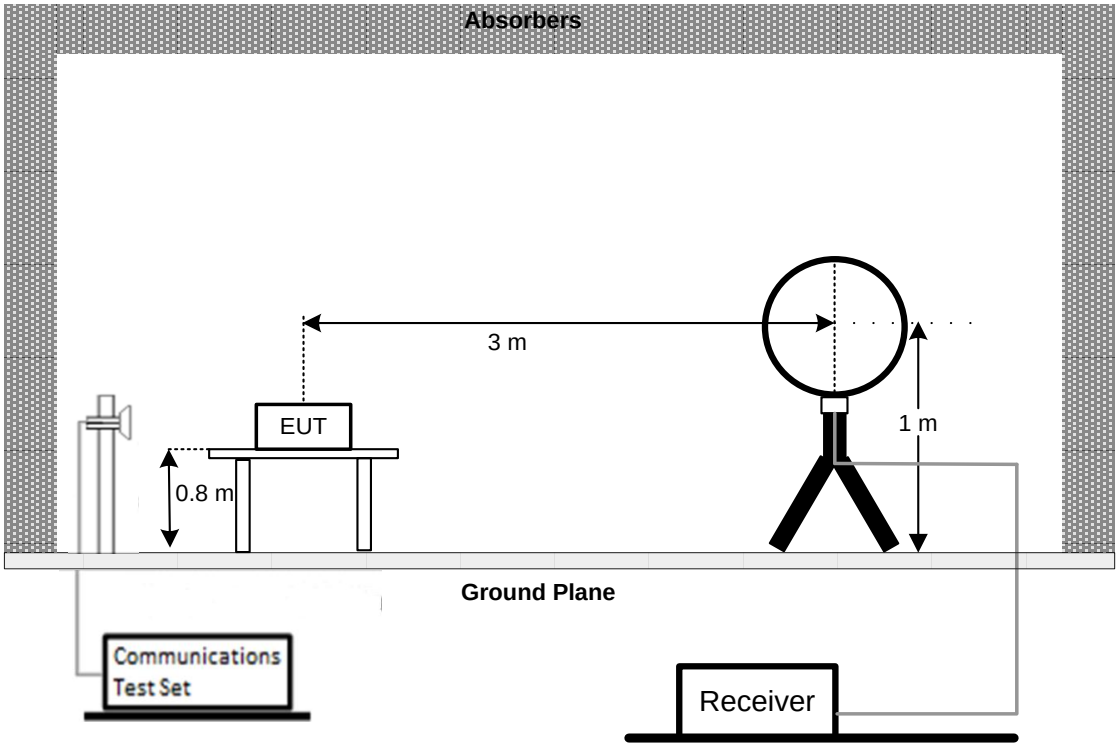

30MHz to 1000MHz

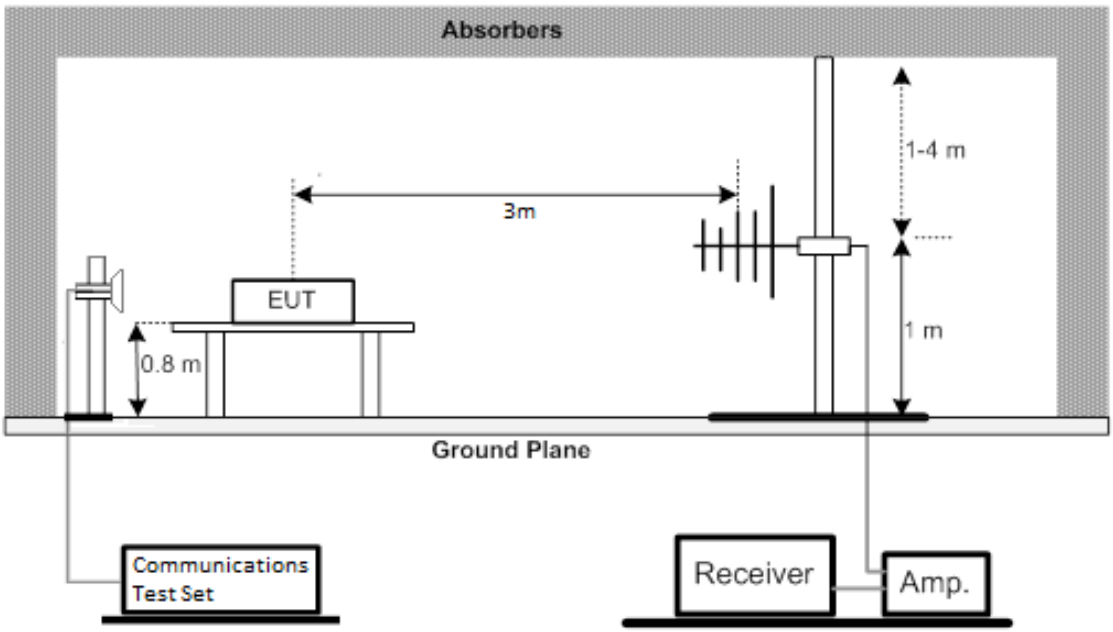

Above 1GHz

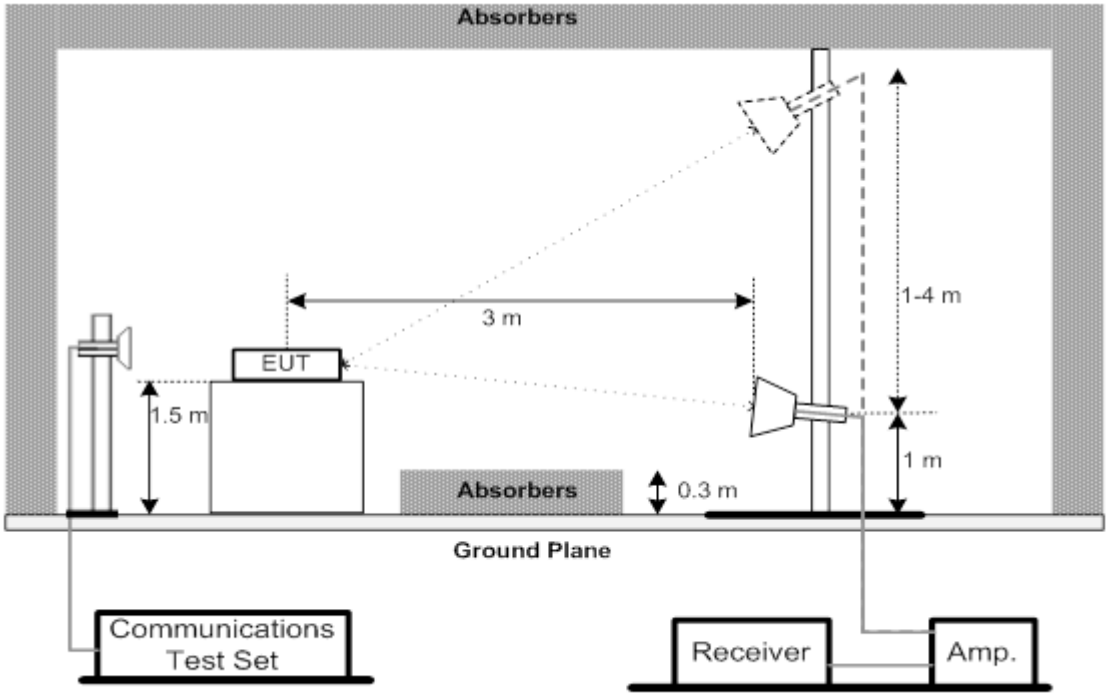

3.4.4 TEST DEVIATION

No deviation

3.4.5 TEST RESULTS (9KHZ TO 30MHZ)

Please refer to the APPENDIX D.

3.4.6 TEST RESULTS (30MHZ TO 1000MHZ)

Please refer to the APPENDIX E.

3.4.7 TEST RESULTS (ABOVE 1000MHZ)

Please refer to the APPENDIX F.

3.5 BAND EDGE MEASUREMENT

3.5.1 LIMIT

A Power of any emission outside of the authorized operating frequency ranges must be attenuated below the transmitting power (P) by a factor of at least 43 + 10 log(P) dB. In the 1 MHz bands immediately outside and adjacent to the frequency block a resolution bandwidth of at least one percent of the emission bandwidth of the fundamental emission of the transmitter may be employed.

3.5.2 TEST PROCEDURES

The testing follows FCC KDB 971168 v03r01 Section 6.

1. All measurements were done at low and high operational frequency range.
2. Record the max trace plot into the test report.

3.5.3 TEST SETUP LAYOUT

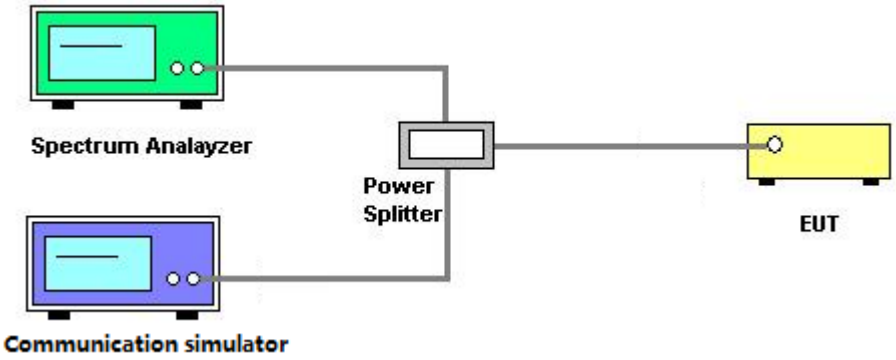

3.5.4 TEST DEVIATION

No deviation

3.5.5 TEST RESULTS

Please refer to the APPENDIX G.

3.6 PEAK TO AVERAGE RATIO MEASUREMENT

3.6.1 LIMIT

In measuring transmissions in this band using an average power technique, the peak to-average ratio (PAR) of the transmission may not exceed 13 dB.

3.6.2 TEST PROCEDURES

The testing follows FCC KDB 971168 v03r01 Section 5.7.

1. Set resolution/measurement bandwidth ≥ signal's occupied bandwidth;
2. Set the number of counts to a value that stabilizes the measured CCDF curve;
3. Record the maximum PAPR level associated with a probability of 0.1%.

3.6.3 TEST SETUP LAYOUT

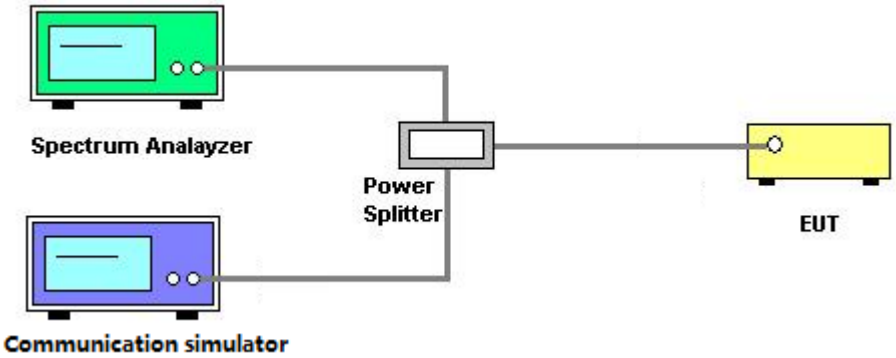

3.6.4 TEST DEVIATION

No deviation

3.6.5 TEST RESULTS

Please refer to the APPENDIX H.

3.7 FREQUENCY STABILITY MEASUREMENT

3.7.1 LIMIT

±1.5 ppm is for base and fixed station. ±2.5 ppm is for mobile station.

3.7.2 TEST PROCEDURES

The testing follows FCC KDB 971168 v03r01 Section 9.

1. Device is placed at the oven room. The oven room could control the temperatures and humidity. Power warm up is at least 15 min and power applied should perform before recording frequency error.
2. EUT is connected the external power supply to control the DC input power. The test voltage range is from minimum to maximum working voltage. Each step shall be record the frequency error rate.
3. The temperature range step is 10 degrees in this test items. All temperature levels shall be hold the ±0.5°C during the measurement testing. The each temperature step shall be at least 0.5 hours, consider the EUT could be test under the stability condition.
4. The frequency error was recorded frequency error from the communication simulator.

3.7.3 TEST SETUP LAYOUT

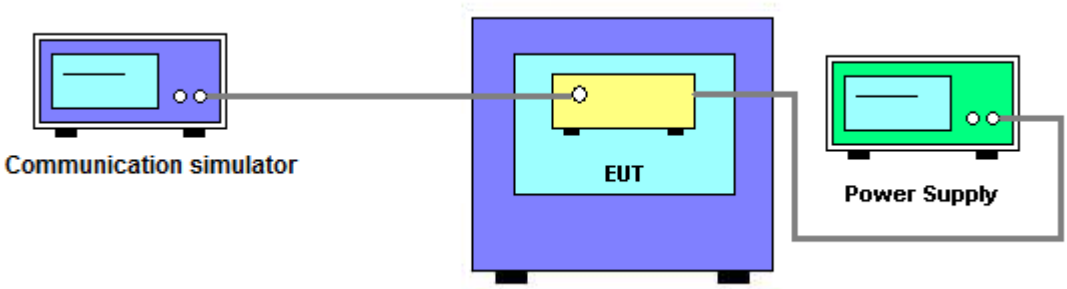

3.7.4 TEST DEVIATION

No deviation

3.7.5 TEST RESULTS

Please refer to the APPENDIX I.

4. LIST OF MEASUREMENT EQUIPMENTS

Radiated Spurious Emission Measurement					
Item	Kind of Equipment	Manufacturer	Type No.	Serial No.	Calibrated until
1	Antenna	Schwarzbeck	VULB9160	9160-3232	Mar. 09, 2021
2	Amplifier	Agilent	8449B	3008A02334	Feb. 28, 2022
3	HighPass Filter	Wairrwright Instruments Gmbh	WHK 1.5/15G-10ST	11	Feb. 27, 2022
4	Band Reject Filter	Wairrwright Instruments Gmbh	WRCG 1710/1785-1690/1805-60/12SS	38	Feb. 27, 2022
5	Band Reject Filter	Wairrwright Instruments Gmbh	WRCG 824/849-810/863-60/9SS	7	Feb. 27, 2022
6	Band Reject Filter	Wairrwright Instruments Gmbh	WRCG 880/915-860/935-60/9SS	14	Feb. 27, 2022
7	Band Reject Filter	Wairrwright Instruments Gmbh	WRCG 1850/1910-1830/1930-60/10SS	17	Feb. 27, 2022
8	HighPass Filter	Wairrwright Instruments Gmbh	WHK3.1/18G-10SS	24	Feb. 27, 2022
9	Wireless Communication Test SET	Agilent	E5515C	MY48364183	Feb. 28, 2022
10	Microwave Preamplifier With Adaptor	EMC INSTRUMENT	EMC2654045	980039 & HA01	Mar. 07, 2021
11	Receiver	Agilent	N9038A	MY52130039	Jul. 25, 2021
12	wideband radio communication tester	R&S	CMW500	152372	Feb. 27, 2022
13	High pass filter	KANGMAIWEI	ZHPF-M3-12.75G-3869	B2015073763	Feb. 07, 2022
14	High pass filter	KANGMAIWEI	ZHPF-M1000-4000-1	B2015073762	Feb. 07, 2022
15	High pass filter	KANGMAIWEI	ZHPF-M6-186-1727	B2015073764	Feb. 07, 2022
16	Cable	emci	LMR-400(30MHz-1GHz) (8m+5m)	N/A	May. 22, 2021
17	Cable	mitron	B10-01-01-12M	18072744	Jun. 28, 2021
18	Controller	ETS-Lindgren	2090	N/A	N/A
19	Measurement Software	Farad	EZ-EMC Ver.NB-03A1-01	N/A	N/A
20	Loop Antenna	EM	EM-6876-1	230	Apr. 16, 2021
21	Double Ridged Guide Antenna	ETS	3115	75846	Mar. 19, 2021
22	Broad-Band Horn Antenna	Schwarzbeck	BBHA 9170	9170319	Jul. 07, 2021

Conducted Measurement					
Item	Kind of Equipment	Manufacturer	Type No.	Serial No.	Calibrated until
1	Wireless Communication Test SET	Agilent	E5515C	MY48364183	Feb. 28, 2022
2	EXA Spectrum Analyzer	Agilent	N9010A	MY50520044	Feb. 28, 2022
3	POWER SPLITTER	Mini-Circuits	ZFRSC-123-S+	331000910-1	Feb. 27, 2022
4	wideband radio communication tester	R&S	CMW500	152372	Feb. 27, 2022

Frequency Stability Measurement					
Item	Kind of Equipment	Manufacturer	Type No.	Serial No.	Calibrated until
1	Wireless Communication Test SET	Agilent	E5515C	MY48364183	Feb. 28, 2022
2*	Multi-output DC Power Supply	GW Instek	GPC-3030DN	EK880675	Jul. 25, 2023
3	POWER SPLITTER	Mini-Circuits	ZFRSC-123-S+	331000910-1	Feb. 27, 2022
4	wideband radio communication tester	R&S	CMW500	152372	Feb. 27, 2022
5	Const Temp,& Humidity Chamber	Bell	BTH-50C	20170306001	Feb. 27, 2022

Remark: ”N/A” denotes no model name, serial no. or calibration specified.
Except * item, all calibration period of equipment list is one year.
“*” calibration period of equipment list is three year.

APPENDIX A - OUTPUT POWER

Output Power for Main Antenna (dBm):

PCS1900		512CH	661CH	810CH
		1850.2MHz	1880MHz	1909.8MHz
GSM (CS)		29.64	29.60	29.59
GPRS/EDGE (GMSK)	1 Tx Slot	29.63	29.56	29.57
	2 Tx Slot	26.68	26.63	26.70
	3 Tx Slot	24.92	24.89	24.95
	4 Tx Slot	23.59	23.56	23.62
EDGE (8PSK)	1 Tx Slot	25.84	25.16	25.80
	2 Tx Slot	22.36	23.04	22.41
	3 Tx Slot	21.41	21.03	20.59
	4 Tx Slot	19.65	19.54	19.33

Modulation	Band	WCDMA Band II		
	Tx Channel	9262CH	9400CH	9538CH
	Frequency	1852.4MHz	1880MHz	1907.6MHz
QPSK	RMC 12.2K	23.16	23.25	23.15
	RMC 64K	23.15	23.24	23.15
	RMC 144K	23.17	23.23	23.16
	RMC 384K	23.15	23.21	23.14
	HSDPA Subtest-1	21.95	21.97	21.95
	HSDPA Subtest-2	21.92	21.98	21.87
	HSDPA Subtest-3	21.44	21.46	21.37
	HSDPA Subtest-4	21.34	21.46	21.36
	HSUPA Subtest-1	19.99	20.01	20.08
	HSUPA Subtest-2	19.99	20.12	20.07
	HSUPA Subtest-3	20.98	21.02	21.01
	HSUPA Subtest-4	19.52	19.61	19.58
	HSUPA Subtest-5	20.95	21.06	20.99

LTE Band / BW	Modulation	RB Size	RB Offset	Low CH	Mid CH	High CH
				18607CH	18900CH	19193CH
				1850.7MHz	1880MHz	1909.3MHz
2 / 1.4M	QPSK	1	0	22.56	22.69	22.60
		1	2	22.62	22.79	22.72
		1	5	22.49	22.70	22.60
		3	0	22.54	22.63	22.50
		3	1	22.61	22.70	22.57
		3	2	22.64	22.67	22.55
		6	0	21.66	21.82	21.63
	16QAM	1	0	21.59	21.64	21.51
		1	2	21.67	21.72	21.58
		1	5	21.62	21.64	21.51
		3	0	21.82	21.64	21.71
		3	1	21.87	21.66	21.73
		3	2	21.81	21.63	21.71
		6	0	20.84	20.84	20.77

LTE Band / BW	Modulation	RB Size	RB Offset	Low CH	Mid CH	High CH
				18615CH	18900CH	19185CH
				1851.5MHz	1880MHz	1908.5MHz
2 / 3M	QPSK	1	0	22.58	22.72	22.54
		1	7	22.68	22.79	22.56
		1	14	22.66	22.72	22.58
		8	0	21.64	21.71	21.57
		8	4	21.63	21.74	21.57
		8	7	21.59	21.66	21.50
		15	0	21.61	21.61	21.49
	16QAM	1	0	21.52	21.94	21.48
		1	7	21.57	21.99	21.53
		1	14	21.50	21.94	21.42
		8	0	20.73	20.75	20.51
		8	4	20.74	20.71	20.54
		8	7	20.72	20.71	20.50
		15	0	20.65	20.65	20.42

LTE Band / BW	Modulation	RB Size	RB Offset	Low CH	Mid CH	High CH
				18625CH	18900CH	19175CH
				1852.5MHz	1880MHz	1907.5MHz
2 / 5M	QPSK	1	0	22.72	22.72	22.58
		1	13	22.66	22.68	22.51
		1	24	22.69	22.68	22.55
		12	0	21.62	21.68	21.45
		12	6	21.65	21.70	21.46
		12	11	21.65	21.68	21.45
		25	0	21.64	21.65	21.43
	16QAM	1	0	21.76	22.07	21.54
		1	13	21.76	22.05	21.46
		1	24	21.76	22.07	21.48
		12	0	20.67	20.75	20.47
		12	6	20.71	20.78	20.46
		12	11	20.72	20.79	20.46
		25	0	20.67	20.72	20.39

LTE Band / BW	Modulation	RB Size	RB Offset	Low CH	Mid CH	High CH
				18650CH	18900CH	19150CH
				1855MHz	1880MHz	1905MHz
2 / 10M	QPSK	1	0	22.59	22.68	22.52
		1	25	22.69	22.81	22.58
		1	49	22.52	22.68	22.48
		25	0	21.60	21.62	21.50
		25	13	21.63	21.63	21.41
		25	25	21.65	21.65	21.38
		50	0	21.63	21.67	21.44
	16QAM	1	0	21.44	21.86	21.41
		1	25	21.62	21.97	21.47
		1	49	21.45	21.84	21.30
		25	0	20.63	20.66	20.54
		25	13	20.65	20.65	20.48
		25	25	20.66	20.68	20.44
		50	0	20.64	20.65	20.45

LTE Band / BW	Modulation	RB Size	RB Offset	Low CH	Mid CH	High CH
				18675CH	18900CH	19125CH
				1857.5MHz	1880MHz	1902.5MHz
2 / 15M	QPSK	1	0	22.53	22.68	22.61
		1	38	22.51	22.68	22.52
		1	74	22.52	22.56	22.50
		36	0	21.64	21.71	21.55
		36	18	21.67	21.75	21.53
		36	39	21.69	21.71	21.48
		75	0	21.69	21.74	21.53
	16QAM	1	0	21.38	21.86	21.74
		1	38	21.40	21.81	21.66
		1	74	21.38	21.74	21.53
		36	0	20.54	20.62	20.42
		36	18	20.59	20.66	20.41
		36	39	20.61	20.66	20.37
		75	0	20.63	20.65	20.45

LTE Band / BW	Modulation	RB Size	RB Offset	Low CH	Mid CH	High CH
				18700CH	18900CH	19100CH
				1860MHz	1880MHz	1900MHz
2 / 20M	QPSK	1	0	22.62	22.60	22.52
		1	50	22.70	22.76	22.61
		1	99	22.53	22.52	22.41
		50	0	21.57	21.58	21.48
		50	25	21.64	21.59	21.43
		50	50	21.63	21.52	21.27
		100	0	21.58	21.60	21.37
	16QAM	1	0	21.93	21.84	21.69
		1	50	22.08	21.91	21.79
		1	99	21.88	21.71	21.52
		50	0	20.48	20.56	20.41
		50	25	20.59	20.53	20.36
		50	50	20.58	20.45	20.20
		100	0	20.57	20.51	20.33

EIRP for Main Antenna (dBm):

PCS1900		512CH	661CH	810CH
		1850.2MHz	1880MHz	1909.8MHz
GSM (CS)		26.14	26.10	26.09
GPRS/EDGE (GMSK)	1 Tx Slot	26.13	26.06	26.07
	2 Tx Slot	23.18	23.13	23.20
	3 Tx Slot	21.42	21.39	21.45
	4 Tx Slot	20.09	20.06	20.12
EDGE (8PSK)	1 Tx Slot	22.34	21.66	22.30
	2 Tx Slot	18.86	19.54	18.91
	3 Tx Slot	17.91	17.53	17.09
	4 Tx Slot	16.15	16.04	15.83

Modulation	Band	WCDMA Band II		
	Tx Channel	9262CH	9400CH	9538CH
	Frequency	1852.4MHz	1880MHz	1907.6MHz
QPSK	RMC 12.2K	19.66	19.75	19.65
	RMC 64K	19.65	19.74	19.65
	RMC 144K	19.67	19.73	19.66
	RMC 384K	19.65	19.71	19.64
	HSDPA Subtest-1	18.45	18.47	18.45
	HSDPA Subtest-2	18.42	18.48	18.37
	HSDPA Subtest-3	17.94	17.96	17.87
	HSDPA Subtest-4	17.84	17.96	17.86
	HSUPA Subtest-1	16.49	16.51	16.58
	HSUPA Subtest-2	16.49	16.62	16.57
	HSUPA Subtest-3	17.48	17.52	17.51
	HSUPA Subtest-4	16.02	16.11	16.08
	HSUPA Subtest-5	17.45	17.56	17.49

LTE Band / BW	Modulation	RB Size	RB Offset	Low CH	Mid CH	High CH
				18607CH	18900CH	19193CH
				1850.7MHz	1880MHz	1909.3MHz
2 / 1.4M	QPSK	1	0	19.06	19.19	19.10
		1	2	19.12	19.29	19.22
		1	5	18.99	19.20	19.10
		3	0	19.04	19.13	19.00
		3	1	19.11	19.20	19.07
		3	2	19.14	19.17	19.05
		6	0	18.16	18.32	18.13
	16QAM	1	0	18.09	18.14	18.01
		1	2	18.17	18.22	18.08
		1	5	18.12	18.14	18.01
		3	0	18.32	18.14	18.21
		3	1	18.37	18.16	18.23
		3	2	18.31	18.13	18.21
		6	0	17.34	17.34	17.27

LTE Band / BW	Modulation	RB Size	RB Offset	Low CH	Mid CH	High CH
				18615CH	18900CH	19185CH
				1851.5MHz	1880MHz	1908.5MHz
2 / 3M	QPSK	1	0	19.08	19.22	19.04
		1	7	19.18	19.29	19.06
		1	14	19.16	19.22	19.08
		8	0	18.14	18.21	18.07
		8	4	18.13	18.24	18.07
		8	7	18.09	18.16	18.00
		15	0	18.11	18.11	17.99
	16QAM	1	0	18.02	18.44	17.98
		1	7	18.07	18.49	18.03
		1	14	18.00	18.44	17.92
		8	0	17.23	17.25	17.01
		8	4	17.24	17.21	17.04
		8	7	17.22	17.21	17.00
		15	0	17.15	17.15	16.92

LTE Band / BW	Modulation	RB Size	RB Offset	Low CH	Mid CH	High CH
				18625CH	18900CH	19175CH
				1852.5MHz	1880MHz	1907.5MHz
2 / 5M	QPSK	1	0	19.22	19.22	19.08
		1	13	19.16	19.18	19.01
		1	24	19.19	19.18	19.05
		12	0	18.12	18.18	17.95
		12	6	18.15	18.20	17.96
		12	11	18.15	18.18	17.95
		25	0	18.14	18.15	17.93
	16QAM	1	0	18.26	18.57	18.04
		1	13	18.26	18.55	17.96
		1	24	18.26	18.57	17.98
		12	0	17.17	17.25	16.97
		12	6	17.21	17.28	16.96
		12	11	17.22	17.29	16.96
		25	0	17.17	17.22	16.89

LTE Band / BW	Modulation	RB Size	RB Offset	Low CH	Mid CH	High CH
				18650CH	18900CH	19150CH
				1855MHz	1880MHz	1905MHz
2 / 10M	QPSK	1	0	19.09	19.18	19.02
		1	25	19.19	19.31	19.08
		1	49	19.02	19.18	18.98
		25	0	18.10	18.12	18.00
		25	13	18.13	18.13	17.91
		25	25	18.15	18.15	17.88
		50	0	18.13	18.17	17.94
	16QAM	1	0	17.94	18.36	17.91
		1	25	18.12	18.47	17.97
		1	49	17.95	18.34	17.80
		25	0	17.13	17.16	17.04
		25	13	17.15	17.15	16.98
		25	25	17.16	17.18	16.94
		50	0	17.14	17.15	16.95

LTE Band / BW	Modulation	RB Size	RB Offset	Low CH	Mid CH	High CH
				18675CH	18900CH	19125CH
				1857.5MHz	1880MHz	1902.5MHz
2 / 15M	QPSK	1	0	19.03	19.18	19.11
		1	38	19.01	19.18	19.02
		1	74	19.02	19.06	19.00
		36	0	18.14	18.21	18.05
		36	18	18.17	18.25	18.03
		36	39	18.19	18.21	17.98
		75	0	18.19	18.24	18.03
	16QAM	1	0	17.88	18.36	18.24
		1	38	17.90	18.31	18.16
		1	74	17.88	18.24	18.03
		36	0	17.04	17.12	16.92
		36	18	17.09	17.16	16.91
		36	39	17.11	17.16	16.87
		75	0	17.13	17.15	16.95

LTE Band / BW	Modulation	RB Size	RB Offset	Low CH	Mid CH	High CH
				18700CH	18900CH	19100CH
				1860MHz	1880MHz	1900MHz
2 / 20M	QPSK	1	0	19.12	19.10	19.02
		1	50	19.20	19.26	19.11
		1	99	19.03	19.02	18.91
		50	0	18.07	18.08	17.98
		50	25	18.14	18.09	17.93
		50	50	18.13	18.02	17.77
		100	0	18.08	18.10	17.87
	16QAM	1	0	18.43	18.34	18.19
		1	50	18.58	18.41	18.29
		1	99	18.38	18.21	18.02
		50	0	16.98	17.06	16.91
		50	25	17.09	17.03	16.86
		50	50	17.08	16.95	16.70
		100	0	17.07	17.01	16.83

Output Power for Second Antenna (dBm):

PCS1900		512CH	661CH	810CH
		1850.2MHz	1880MHz	1909.8MHz
GSM (CS)		29.04	29.16	29.25
GPRS/EDGE (GMSK)	1 Tx Slot	29.06	29.18	29.21
	2 Tx Slot	26.04	26.16	26.28
	3 Tx Slot	24.3	24.41	24.52
	4 Tx Slot	22.95	23.20	23.20
EDGE (8PSK)	1 Tx Slot	25.1	24.70	24.63
	2 Tx Slot	22.13	21.96	22.10
	3 Tx Slot	20.31	20.56	19.83
	4 Tx Slot	18.9	18.53	18.66

Modulation	Band	WCDMA Band II		
	Tx Channel	9262CH	9400CH	9538CH
	Frequency	1852.4MHz	1880MHz	1907.6MHz
QPSK	RMC 12.2K	20.46	20.6	20.51
	RMC 64K	20.55	20.59	20.49
	RMC 144K	20.47	20.57	20.83
	RMC 384K	20.45	20.58	20.57
	HSDPA Subtest-1	20.32	20.42	20.27
	HSDPA Subtest-2	20.21	20.29	20.16
	HSDPA Subtest-3	19.77	19.8	19.7
	HSDPA Subtest-4	19.8	19.8	19.69
	HSUPA Subtest-1	18.2	18.28	18.11
	HSUPA Subtest-2	17.79	17.82	18.26
	HSUPA Subtest-3	18.71	18.82	18.58
	HSUPA Subtest-4	17.69	17.88	17.97
	HSUPA Subtest-5	19.31	19.34	19.25

LTE Band / BW	Modulation	RB Size	RB Offset	Low CH	Mid CH	High CH
				18607CH	18900CH	19193CH
				1850.7MHz	1880MHz	1909.3MHz
2 / 1.4M	QPSK	1	0	21.00	21.00	20.87
		1	2	21.06	21.12	20.98
		1	5	20.96	20.96	20.89
		3	0	21.02	21.07	20.95
		3	1	21.02	21.08	21.00
		3	2	20.95	21.04	21.00
		6	0	21.07	21.03	21.02
	16QAM	1	0	20.97	21.35	20.86
		1	2	21.11	21.43	20.92
		1	5	21.01	21.30	20.87
		3	0	20.97	21.26	21.09
		3	1	21.00	21.26	21.11
		3	2	20.98	21.28	21.06
		6	0	20.54	20.37	20.47

LTE Band / BW	Modulation	RB Size	RB Offset	Low CH	Mid CH	High CH
				18615CH	18900CH	19185CH
				1851.5MHz	1880MHz	1908.5MHz
2 / 3M	QPSK	1	0	20.95	21.05	20.91
		1	7	21.03	21.12	20.97
		1	14	20.97	21.05	20.91
		8	0	20.97	20.97	20.90
		8	4	20.98	21.02	20.92
		8	7	20.93	20.98	20.87
		15	0	20.94	20.95	20.87
	16QAM	1	0	20.84	21.29	20.91
		1	7	20.91	21.39	20.93
		1	14	20.81	21.30	20.82
		8	0	20.40	20.45	20.29
		8	4	20.43	20.46	20.29
		8	7	20.38	20.38	20.24
		15	0	20.31	20.38	20.18

LTE Band / BW	Modulation	RB Size	RB Offset	Low CH	Mid CH	High CH
				18625CH	18900CH	19175CH
				1852.5MHz	1880MHz	1907.5MHz
2 / 5M	QPSK	1	0	21.03	21.02	20.95
		1	13	21.02	21.00	20.95
		1	24	21.07	21.00	20.96
		12	0	20.94	20.98	20.88
		12	6	20.95	21.02	20.90
		12	11	20.95	21.02	20.91
		25	0	20.92	20.99	20.90
	16QAM	1	0	21.06	21.46	20.93
		1	13	21.04	21.43	20.91
		1	24	21.09	21.44	20.94
		12	0	20.34	20.53	20.30
		12	6	20.37	20.54	20.30
		12	11	20.37	20.52	20.30
		25	0	20.33	20.47	20.24

LTE Band / BW	Modulation	RB Size	RB Offset	Low CH	Mid CH	High CH
				18650CH	18900CH	19150CH
				1855MHz	1880MHz	1905MHz
2 / 10M	QPSK	1	0	20.91	21.04	20.89
		1	25	21.03	21.15	20.98
		1	49	20.89	21.00	20.89
		25	0	20.94	21.00	20.96
		25	13	20.94	21.00	20.88
		25	25	20.96	21.02	20.87
		50	0	20.93	20.99	20.92
	16QAM	1	0	20.83	21.33	20.90
		1	25	20.97	21.43	20.97
		1	49	20.84	21.28	20.84
		25	0	20.40	20.47	20.47
		25	13	20.38	20.46	20.37
		25	25	20.41	20.46	20.38
		50	0	20.36	20.45	20.36

LTE Band / BW	Modulation	RB Size	RB Offset	Low CH	Mid CH	High CH
				18675CH	18900CH	19125CH
				1857.5MHz	1880MHz	1902.5MHz
2 / 15M	QPSK	1	0	20.95	21.02	20.96
		1	38	20.93	20.98	20.93
		1	74	20.92	20.93	20.94
		36	0	21.09	21.01	21.08
		36	18	21.02	21.02	21.00
		36	39	21.01	21.05	20.95
		75	0	21.02	21.04	21.01
	16QAM	1	0	20.83	21.39	21.19
		1	38	20.88	21.31	21.20
		1	74	20.92	21.22	21.15
		36	0	20.42	20.46	20.38
		36	18	20.44	20.46	20.31
		36	39	20.45	20.48	20.28
		75	0	20.46	20.49	20.36

LTE Band / BW	Modulation	RB Size	RB Offset	Low CH	Mid CH	High CH
				18700CH	18900CH	19100CH
				1860MHz	1880MHz	1900MHz
2 / 20M	QPSK	1	0	20.93	21.00	20.96
		1	50	21.05	21.14	21.08
		1	99	20.94	20.95	20.92
		50	0	20.94	21.06	21.02
		50	25	21.00	21.07	20.95
		50	50	21.00	21.00	20.81
		100	0	20.97	21.04	20.92
	16QAM	1	0	21.42	21.42	21.40
		1	50	21.60	21.50	21.56
		1	99	21.48	21.27	21.38
		50	0	20.39	20.50	20.41
		50	25	20.43	20.49	20.36
		50	50	20.43	20.39	20.23
		100	0	20.41	20.43	20.38

EIRP for Second Antenna (dBm):

PCS1900		512CH	661CH	810CH
		1850.2MHz	1880MHz	1909.8MHz
GSM (CS)		26.44	26.56	26.65
GPRS/EDGE (GMSK)	1 Tx Slot	26.46	26.58	26.61
	2 Tx Slot	23.44	23.56	23.68
	3 Tx Slot	21.70	21.81	21.92
	4 Tx Slot	20.35	20.60	20.60
EDGE (8PSK)	1 Tx Slot	22.50	22.10	22.03
	2 Tx Slot	19.53	19.36	19.50
	3 Tx Slot	17.71	17.96	17.23
	4 Tx Slot	16.30	15.93	16.06

Modulation	Band	WCDMA Band II		
	Tx Channel	9262CH	9400CH	9538CH
	Frequency	1852.4MHz	1880MHz	1907.6MHz
QPSK	RMC 12.2K	17.86	18.00	17.91
	RMC 64K	17.95	17.99	17.89
	RMC 144K	17.87	17.97	18.23
	RMC 384K	17.85	17.98	17.97
	HSDPA Subtest-1	17.72	17.82	17.67
	HSDPA Subtest-2	17.61	17.69	17.56
	HSDPA Subtest-3	17.17	17.20	17.10
	HSDPA Subtest-4	17.20	17.20	17.09
	HSUPA Subtest-1	15.60	15.68	15.51
	HSUPA Subtest-2	15.19	15.22	15.66
	HSUPA Subtest-3	16.11	16.22	15.98
	HSUPA Subtest-4	15.09	15.28	15.37
	HSUPA Subtest-5	16.71	16.74	16.65

LTE Band / BW	Modulation	RB Size	RB Offset	Low CH	Mid CH	High CH
				18607CH	18900CH	19193CH
				1850.7MHz	1880MHz	1909.3MHz
2 / 1.4M	QPSK	1	0	18.40	18.40	18.27
		1	2	18.46	18.52	18.38
		1	5	18.36	18.36	18.29
		3	0	18.42	18.47	18.35
		3	1	18.42	18.48	18.40
		3	2	18.35	18.44	18.40
		6	0	18.47	18.43	18.42
	16QAM	1	0	18.37	18.75	18.26
		1	2	18.51	18.83	18.32
		1	5	18.41	18.70	18.27
		3	0	18.37	18.66	18.49
		3	1	18.40	18.66	18.51
		3	2	18.38	18.68	18.46
		6	0	17.94	17.77	17.87

LTE Band / BW	Modulation	RB Size	RB Offset	Low CH	Mid CH	High CH
				18615CH	18900CH	19185CH
				1851.5MHz	1880MHz	1908.5MHz
2 / 3M	QPSK	1	0	18.35	18.45	18.31
		1	7	18.43	18.52	18.37
		1	14	18.37	18.45	18.31
		8	0	18.37	18.37	18.30
		8	4	18.38	18.42	18.32
		8	7	18.33	18.38	18.27
		15	0	18.34	18.35	18.27
	16QAM	1	0	18.24	18.69	18.31
		1	7	18.31	18.79	18.33
		1	14	18.21	18.70	18.22
		8	0	17.80	17.85	17.69
		8	4	17.83	17.86	17.69
		8	7	17.78	17.78	17.64
		15	0	17.71	17.78	17.58

LTE Band / BW	Modulation	RB Size	RB Offset	Low CH	Mid CH	High CH
				18625CH	18900CH	19175CH
				1852.5MHz	1880MHz	1907.5MHz
2 / 5M	QPSK	1	0	18.43	18.42	18.35
		1	13	18.42	18.40	18.35
		1	24	18.47	18.40	18.36
		12	0	18.34	18.38	18.28
		12	6	18.35	18.42	18.30
		12	11	18.35	18.42	18.31
		25	0	18.32	18.39	18.30
	16QAM	1	0	18.46	18.86	18.33
		1	13	18.44	18.83	18.31
		1	24	18.49	18.84	18.34
		12	0	17.74	17.93	17.70
		12	6	17.77	17.94	17.70
		12	11	17.77	17.92	17.70
		25	0	17.73	17.87	17.64

LTE Band / BW	Modulation	RB Size	RB Offset	Low CH	Mid CH	High CH
				18650CH	18900CH	19150CH
				1855MHz	1880MHz	1905MHz
2 / 10M	QPSK	1	0	18.31	18.44	18.29
		1	25	18.43	18.55	18.38
		1	49	18.29	18.40	18.29
		25	0	18.34	18.40	18.36
		25	13	18.34	18.40	18.28
		25	25	18.36	18.42	18.27
		50	0	18.33	18.39	18.32
	16QAM	1	0	18.23	18.73	18.30
		1	25	18.37	18.83	18.37
		1	49	18.24	18.68	18.24
		25	0	17.80	17.87	17.87
		25	13	17.78	17.86	17.77
		25	25	17.81	17.86	17.78
		50	0	17.76	17.85	17.76

LTE Band / BW	Modulation	RB Size	RB Offset	Low CH	Mid CH	High CH
				18675CH	18900CH	19125CH
				1857.5MHz	1880MHz	1902.5MHz
2 / 15M	QPSK	1	0	18.35	18.42	18.36
		1	38	18.33	18.38	18.33
		1	74	18.32	18.33	18.34
		36	0	18.49	18.41	18.48
		36	18	18.42	18.42	18.40
		36	39	18.41	18.45	18.35
		75	0	18.42	18.44	18.41
	16QAM	1	0	18.23	18.79	18.59
		1	38	18.28	18.71	18.60
		1	74	18.32	18.62	18.55
		36	0	17.82	17.86	17.78
		36	18	17.84	17.86	17.71
		36	39	17.85	17.88	17.68
		75	0	17.86	17.89	17.76

LTE Band / BW	Modulation	RB Size	RB Offset	Low CH	Mid CH	High CH
				18700CH	18900CH	19100CH
				1860MHz	1880MHz	1900MHz
2 / 20M	QPSK	1	0	18.33	18.40	18.36
		1	50	18.45	18.54	18.48
		1	99	18.34	18.35	18.32
		50	0	18.34	18.46	18.42
		50	25	18.40	18.47	18.35
		50	50	18.40	18.40	18.21
		100	0	18.37	18.44	18.32
	16QAM	1	0	18.82	18.82	18.80
		1	50	19.00	18.90	18.96
		1	99	18.88	18.67	18.78
		50	0	17.79	17.90	17.81
		50	25	17.83	17.89	17.76
		50	50	17.83	17.79	17.63
		100	0	17.81	17.83	17.78

APPENDIX B - OCCUPIED BANDWIDTH

PCS1900					
GSM			EDGE		
CS			8PSK		
Channel	Frequency (MHz)	99% Occupied Bandwidth (MHz)	Channel	Frequency (MHz)	99% Occupied Bandwidth (MHz)
512	1850.2	0.2444	512	1850.2	0.3180
661	1880	0.2447	661	1880	0.3198
810	1909.8	0.2466	810	1909.8	0.3211
Channel	Frequency (MHz)	26dB Bandwidth (MHz)	Channel	Frequency (MHz)	26dB Bandwidth (MHz)
512	1850.2	0.2489	512	1850.2	0.3193
661	1880	0.2516	661	1880	0.3166
810	1909.8	0.2507	810	1909.8	0.3222

Spectrum Plot

GSM-512

GSM-661

GSM-810

EDGE-512

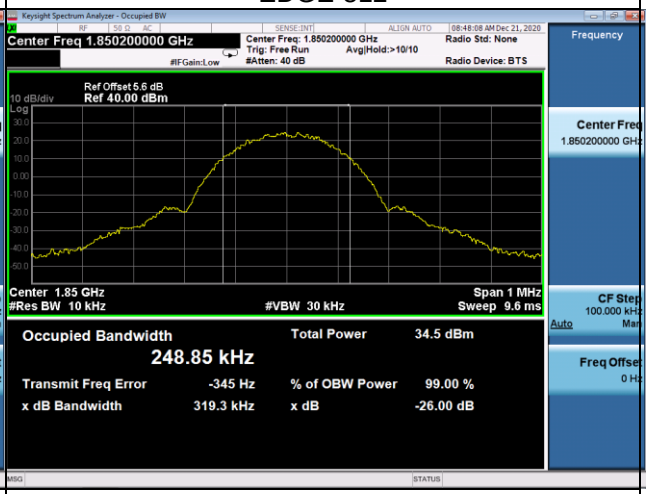

EDGE-661

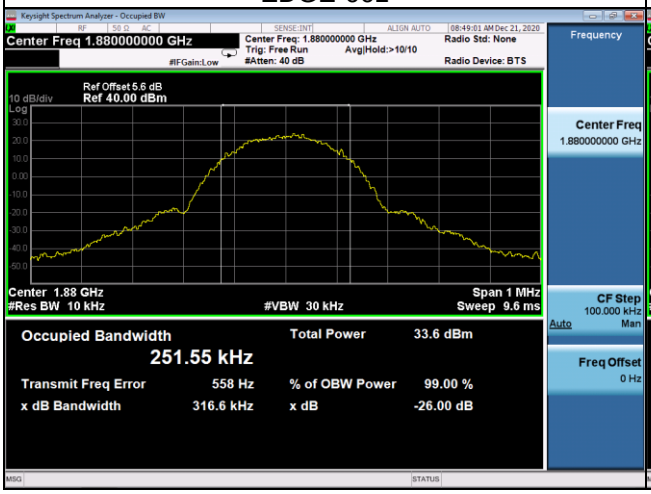

EDGE-810

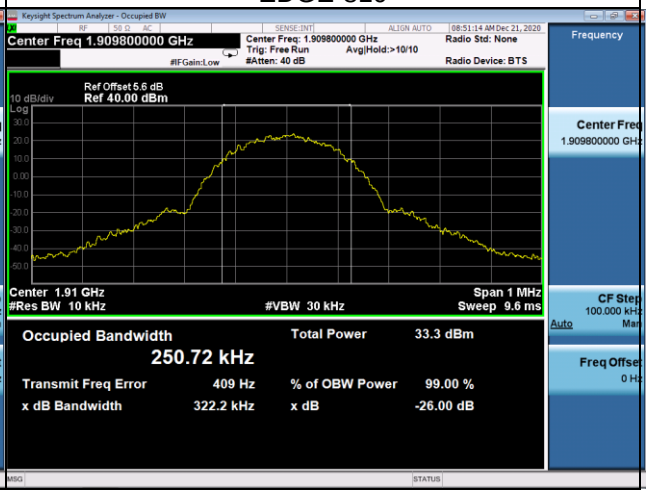

WCDMA Band II_WCDMA					
QPSK					
Channel	Frequency (MHz)	99% Occupied Bandwidth (MHz)	Channel	Frequency (MHz)	26dB Bandwidth (MHz)
9262	1852.4	4.1745	9262	1852.4	4.719
9400	1880	4.1751	9400	1880	4.727
9538	1907.6	4.1795	9538	1907.6	4.731

Spectrum Plot

9262

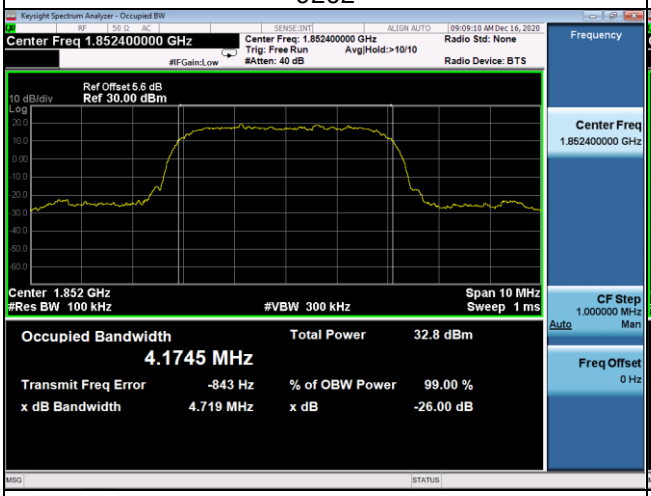

9400

9538

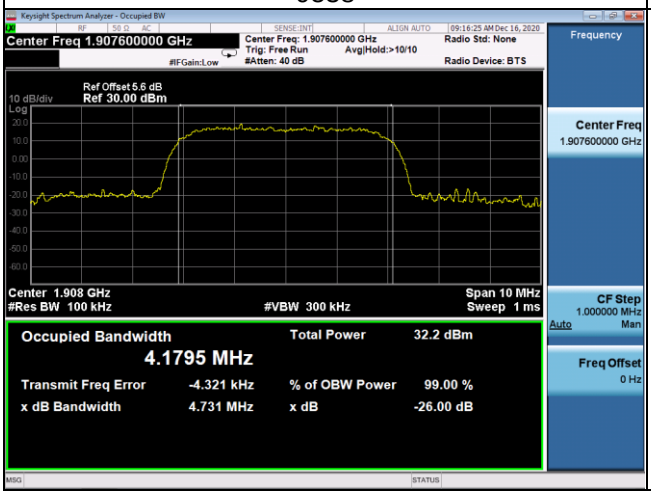

-

-

WCDMA Band II _HSDPA					
QPSK					
Channel	Frequency (MHz)	99% Occupied Bandwidth (MHz)	Channel	Frequency (MHz)	26dB Bandwidth (MHz)
9262	1852.4	4.1838	9262	1852.4	4.715
9400	1880	4.1786	9400	1880	4.721
9538	1907.6	4.1799	9538	1907.6	4.740

Spectrum Plot

9262

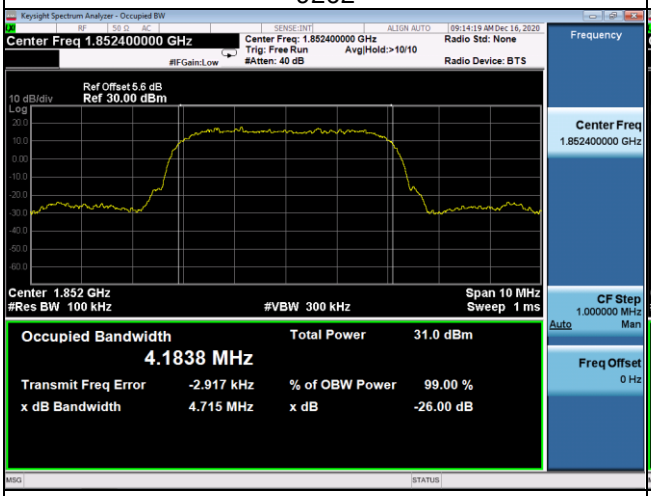

9400

9538

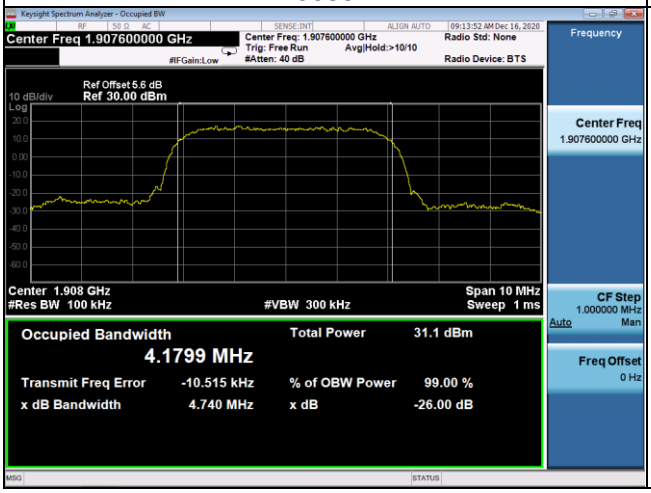

-

-

WCDMA Band II _HSUPA					
QPSK					
Channel	Frequency (MHz)	99% Occupied Bandwidth (MHz)	Channel	Frequency (MHz)	26dB Bandwidth (MHz)
9262	1852.4	4.2107	9262	1852.4	4.738
9400	1880	4.1941	9400	1880	4.731
9538	1907.6	4.2000	9538	1907.6	4.732

Spectrum Plot

9262

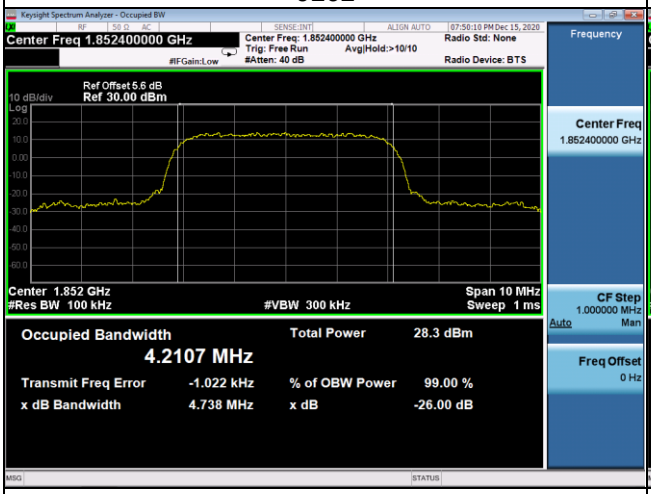

9400

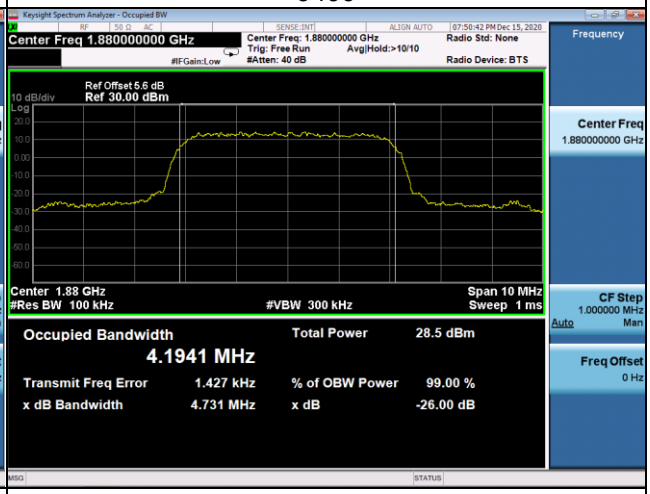

9538

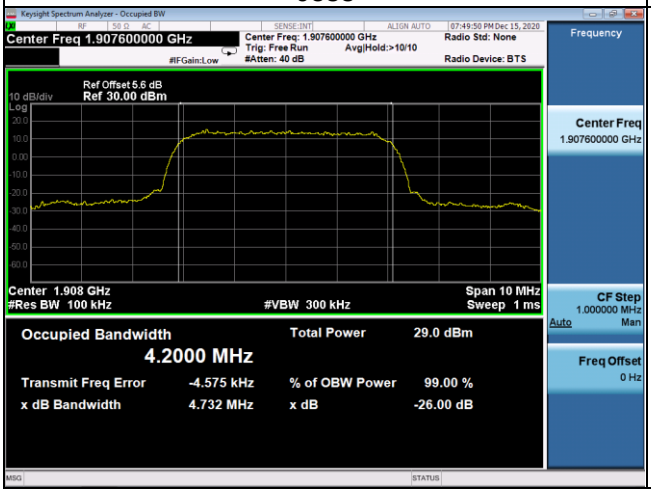

-

-

LTE Band 2_1.4M					
QPSK					
Channel	Frequency (MHz)	99% Occupied Bandwidth (MHz)	Channel	Frequency (MHz)	26dB Bandwidth (MHz)
18607	1850.7	1.0937	18607	1850.7	1.316
18900	1880	1.1021	18900	1880	1.316
19193	1909.3	1.0868	19193	1909.3	1.267
16QAM					
Channel	Frequency (MHz)	99% Occupied Bandwidth (MHz)	Channel	Frequency (MHz)	26dB Bandwidth (MHz)
18607	1850.7	1.0904	18607	1850.7	1.296
18900	1880	1.0883	18900	1880	1.305
19193	1909.3	1.0910	19193	1909.3	1.306

Spectrum Plot

QPSK-18607

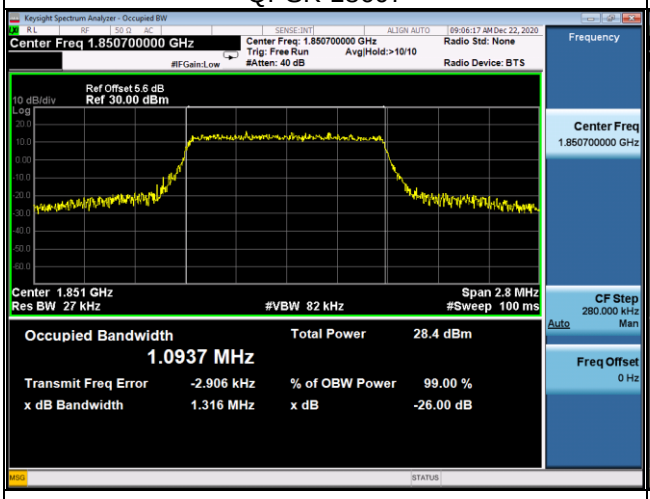

QPSK-18900

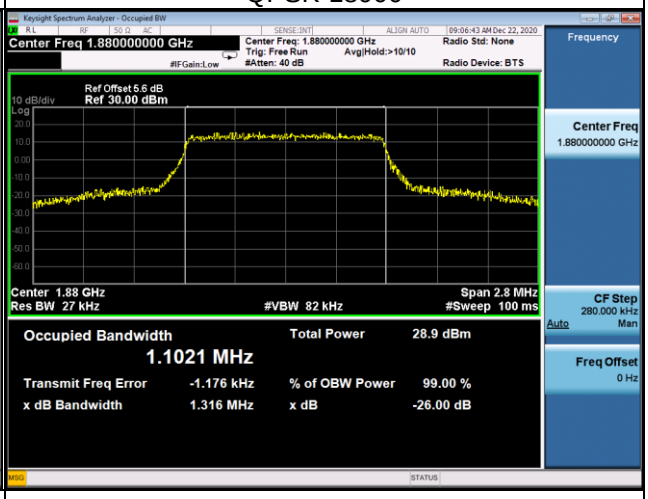

QPSK-19193

16QAM-18607

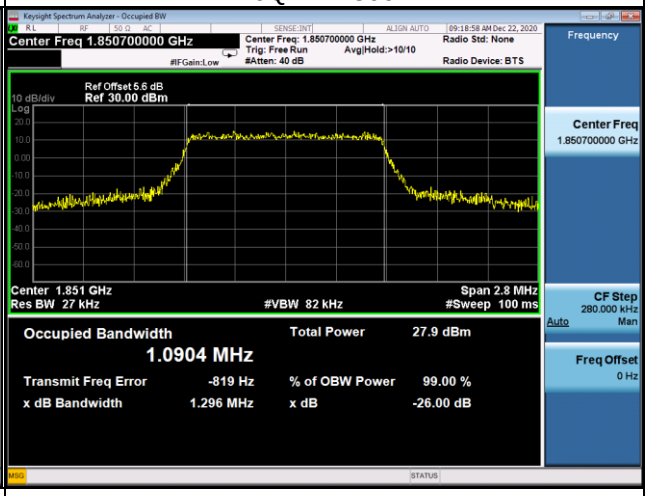

16QAM-18900

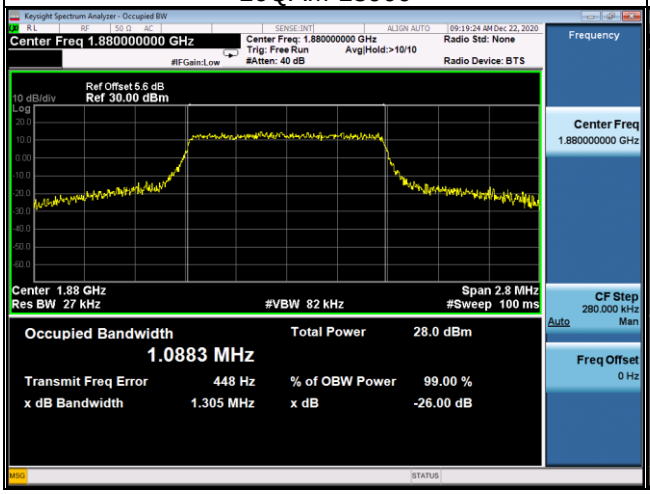

16QAM-19193

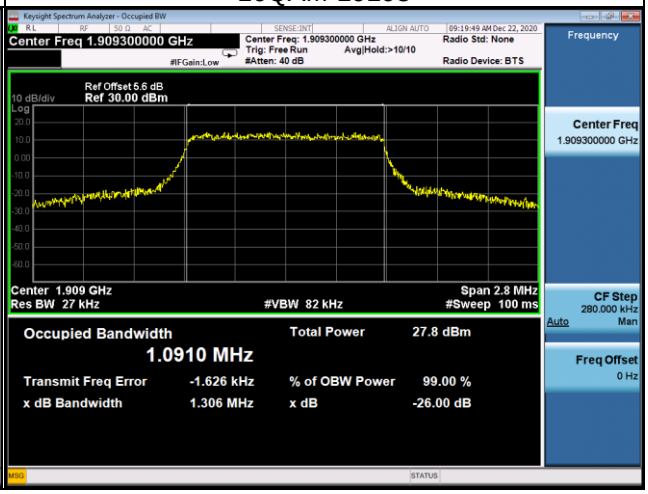

LTE Band 2_3M					
QPSK					
Channel	Frequency (MHz)	99% Occupied Bandwidth (MHz)	Channel	Frequency (MHz)	26dB Bandwidth (MHz)
18615	1851.5	2.6813	18615	1851.5	2.927
18900	1880	2.6937	18900	1880	2.917
19185	1908.5	2.6905	19185	1908.5	2.916
16QAM					
Channel	Frequency (MHz)	99% Occupied Bandwidth (MHz)	Channel	Frequency (MHz)	26dB Bandwidth (MHz)
18615	1851.5	2.6911	18615	1851.5	2.909
18900	1880	2.6848	18900	1880	2.928
19185	1908.5	2.6855	19185	1908.5	2.919

Spectrum Plot

QPSK-18615

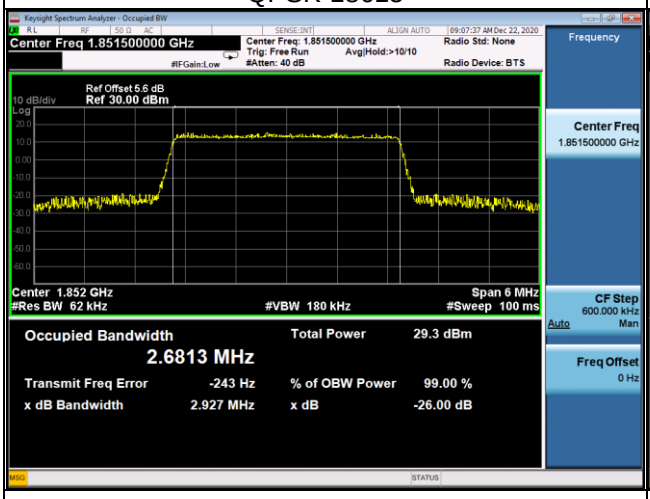

QPSK-18900

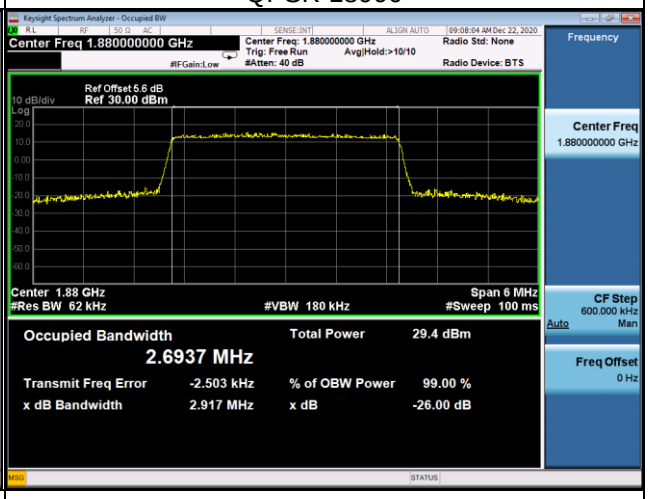

QPSK-19185

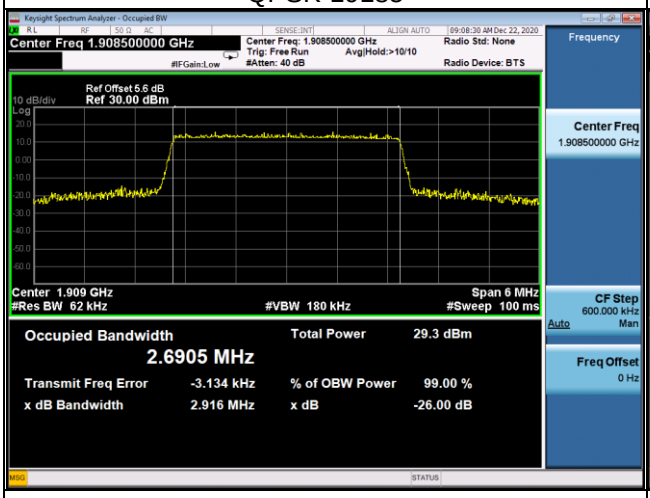

16QAM-18615

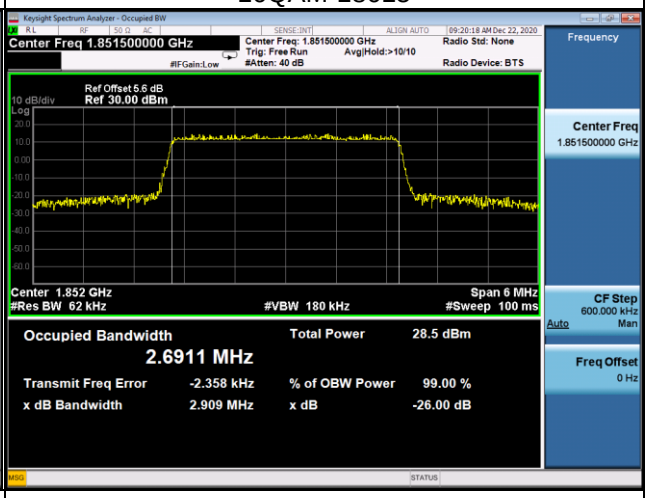

16QAM-18900

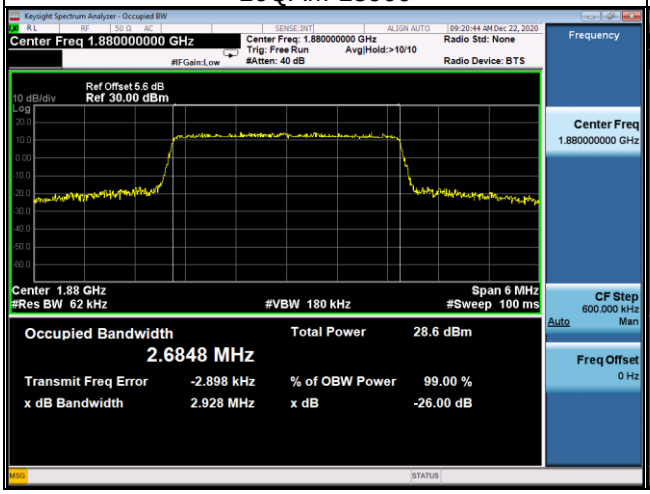

16QAM-19185

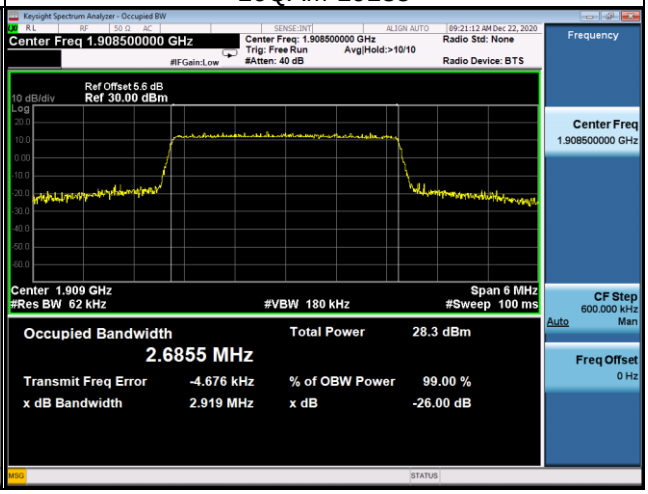

LTE Band 2_5M					
QPSK					
Channel	Frequency (MHz)	99% Occupied Bandwidth (MHz)	Channel	Frequency (MHz)	26dB Bandwidth (MHz)
18625	1852.5	4.5070	18625	1852.5	4.942
18900	1880	4.4936	18900	1880	4.859
19175	1907.5	4.4999	19175	1907.5	4.879
16QAM					
Channel	Frequency (MHz)	99% Occupied Bandwidth (MHz)	Channel	Frequency (MHz)	26dB Bandwidth (MHz)
18625	1852.5	4.4967	18625	1852.5	4.948
18900	1880	4.4894	18900	1880	4.935
19175	1907.5	4.4956	19175	1907.5	4.915