Shenzhen Free Walk Technology Co. LTD

ADD: Third floor, building 2, industrial park, Hezhou West District, Baoan Xixiang, Shenzhen
Email: zyx_sz@yeah.net
TEL: 86-0755-29955983 FAX: 86-0755-29955983

APPROVAL SHEET

Customer: Fang Nuo

Product: 2.4G External Antenna (L=95mm)/ IPEX-1

Model: R1200A4

Part Number: Z02-20753-R01

Written By: Hu Tao

Issued Date: 2025-07-16

CUSTOMER

ENGINEER R&D DEPT	QUALITY DEPT	APPROVED

Free Walk

R&D DEPT	ENGINEER R&D DEPT	APPROVED
Li Wen Ke	Gu Zhenghua	Deng Kai

Free Walk Proprietary & Confidential © 2025 Free Walk Corporation. All rights reserved.

Document Change Resume

Form number:QR-ZYX-084 APPROVAL REV: A0

Product model				Document change record			
No	Change the type	File number	Date of change	Description of change content	Production / revision	edition	remark

Free Walk Proprietary & Confidential © 2025 Free Walk Corporation. All rights reserved.

Index

1. Cover ····· 1

2. Document Change Resume ····· 2

3. **Index** ····· 3

4. **The basic parameters** ····· 4

5. **Product Drawing** ····· 5

6. **Test Equipment & Conditions** ····· 6

7. **Test Data** ····· 7-10

8. RoHS report list ····· 11

9. **TEE PACKING WAY** ····· 12

Free Walk Proprietary & Confidential © 2025 Free Walk Corporation. All rights reserved.

The basic parameters

A. Electrical Characteristics	
Frequency	**2400 MHz ~2500MHz**
VSWR	**≤2**
Efficiency	**>50%**
Impedance	**50 Ohm**
Polarization	**Linear**
Gain	**2.4G 5dBi**
B. Material & Mechanical Characteristics	
Material of Radiator	
Cable Type	**Φ1.13mm Gray**
Connector Type	IPEX-1
Dimension	
C. Environmental	
Operation Temperature	**- 20 ˚C ~ + 60 ˚C**
Storage Temperature	**- 40 ˚C ~ + 80 ˚C**

Free Walk Proprietary & Confidential © 2025 Free Walk Corporation. All rights reserved.

NO	Name	Material	Colour	Amount	Remark
①	RFline	⌀1.13 line	gray	1	
②	Bottom Solid	PC	black	1	
③	Rod sleeve	ABS	black	1	
④	PCB	FR-4	black	1	
⑤	Spring	carbon steel	silvery	1	
⑥	Rivet	POM	black	2	
⑦	IPEX	IPEX-1	golden	1	

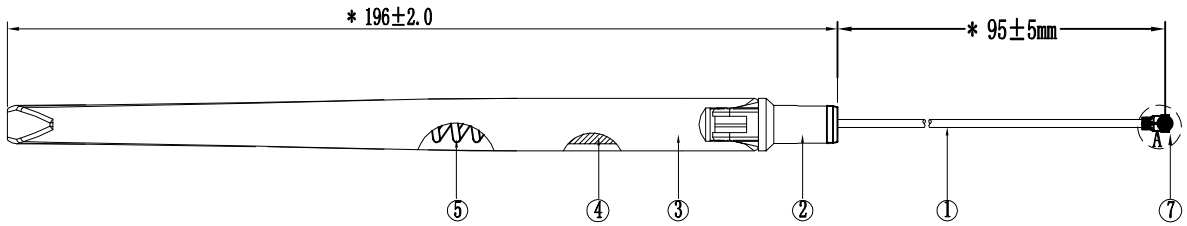

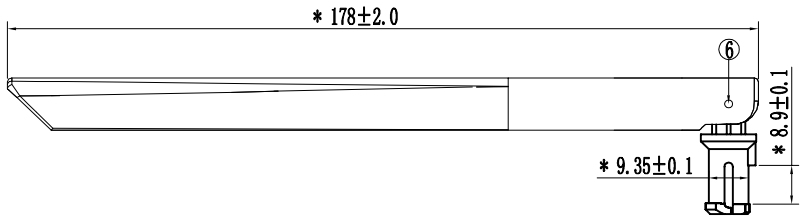

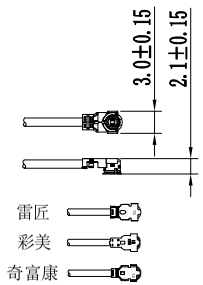

NOTE:

- Mark * as the key dimension for inspection, and for unmarked tolerance dimensions, check within ± 0.15.
- Reference drawings without specified dimensions; Other dimensions are subject to actual configuration.
- Plastic must not have any sharp edges, deformation, oil stains, shrinkage, severe imprinting, or other phenomena.
- There should be no virtual soldering, soldering or other phenomena at the finished solder pads, and the conductivity of the finished product should be tested to be OK.
- The material complies with environmental regulations such as ROHS 2.0

Shenzhen free travel communication technology Co., LTD

The third Angle method				Machine type	R1200A4	date	2025-07-15		page number	1/2	
Note tolerances refer to standard		○	0.02	Product name	2.4G-External antenna	design			audit	Gudeg	
10以下	±0.10	◎	⌀0.03	Part number	Z02-20753-R01	audit	engineering				
10~20	±0.12	⊥	0.02	Customer P/N			FR	MR LI			
20~40	±0.15	▱	0.04	Material quality	N/A	affirm					
40以上	±0.20	⌓	0.02	appearance treatment		UNIT	mm	RATIO	FIT	versions	T:A
Do not observe drawing											

Test Equipment & Conditions

1. Network Analyzers :

Agilent 8753D 5071B

2. Communications Test Set:

Agilent 8960

3. 3D Chamber Test System

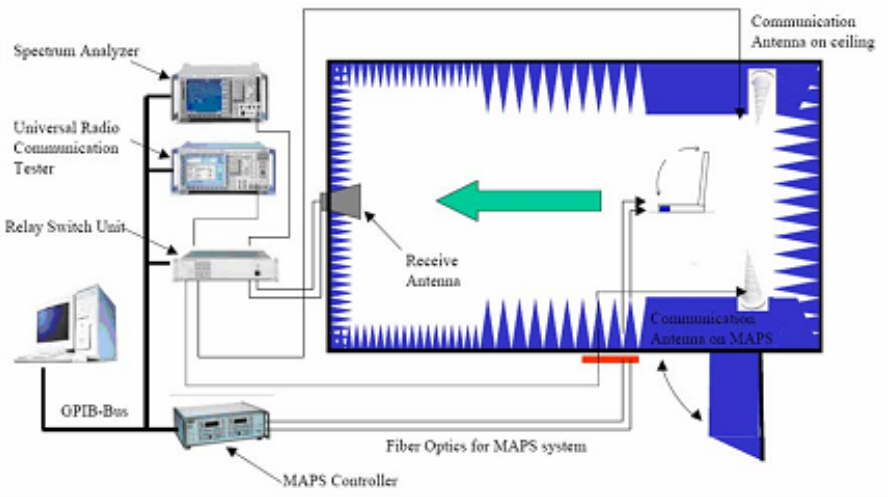

(Testing by 3D anechoic chamber)

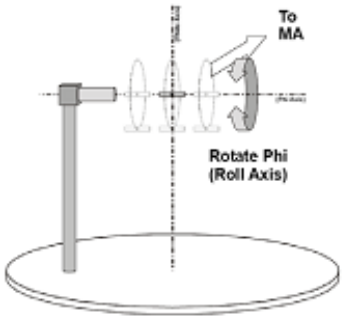

Phi axis test

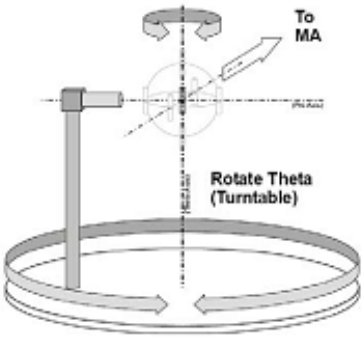

Theta axis test

Free Walk Proprietary & Confidential © 2025 Free Walk Corporation. All rights reserved.

TEST DATA

SWR

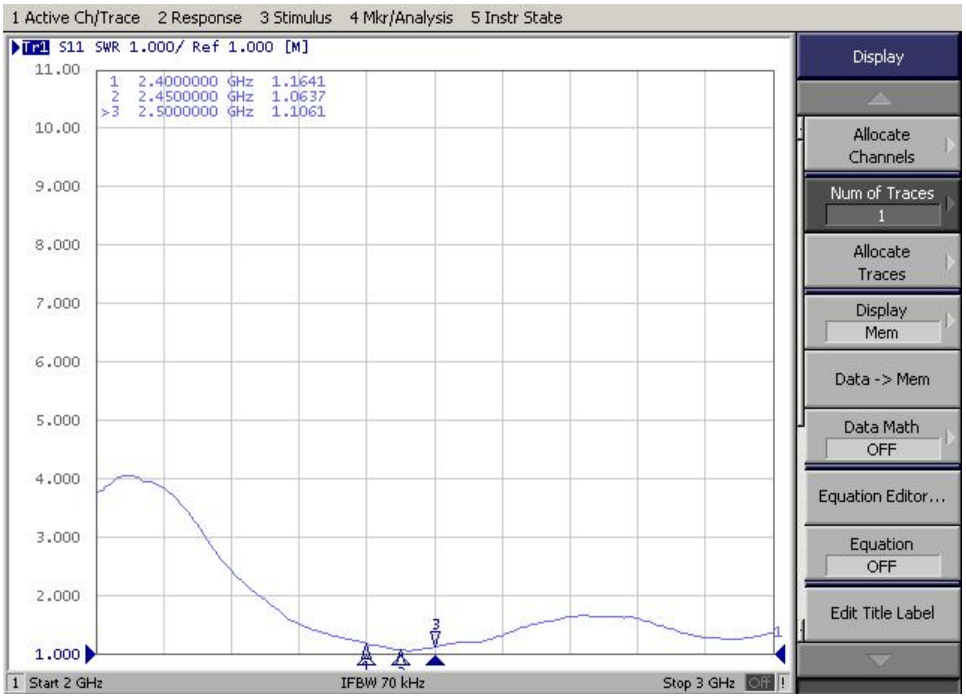

Smith(R+jX)

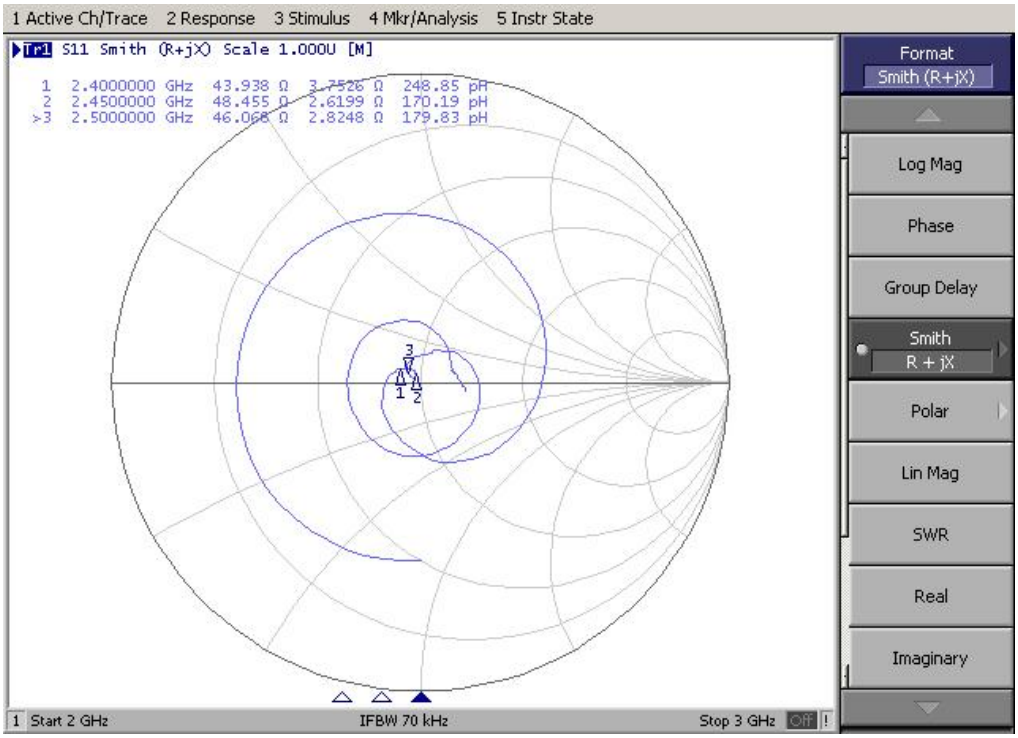

Free Walk Proprietary & Confidential © 2025 Free Walk Corporation. All rights reserved.

Efficency&Gain

test data

Freq(MHz)	Effi(%)	Gain(dBi)
2400	75.7	5.59
2410	73.79	5.62
2420	72.68	5
2430	70.79	5.52
2440	75.8	5.8
2450	76.52	5.88
2460	75.34	5.62
2470	76.72	5.63
2480	72.22	5.72
2490	75.62	5.67
2500	72.47	5.43

Free Walk Proprietary & Confidential © 2025 Free Walk Corporation. All rights reserved.

3D Patten

2400MHz

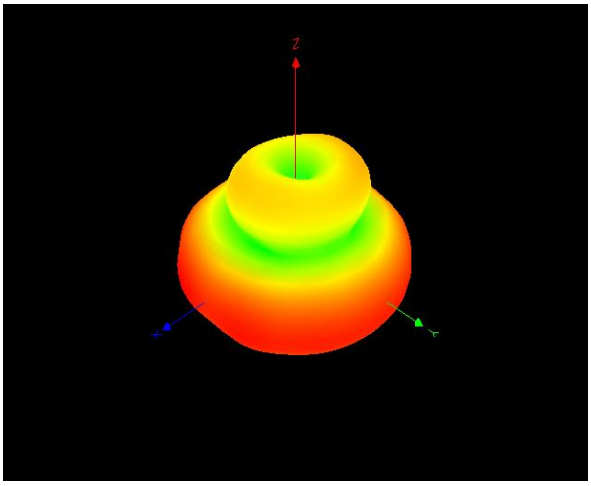

2450MHz

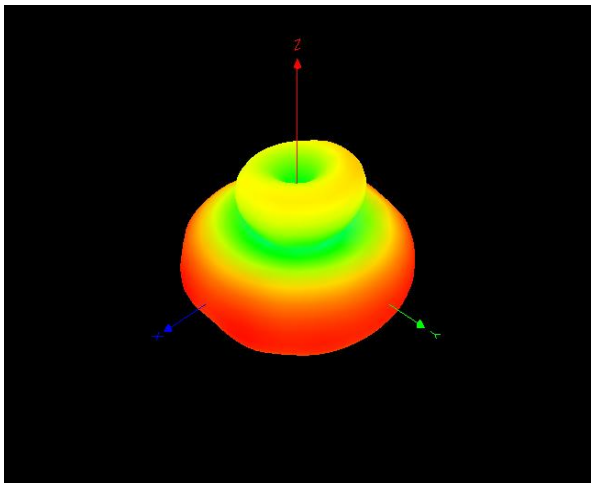

2500MHz

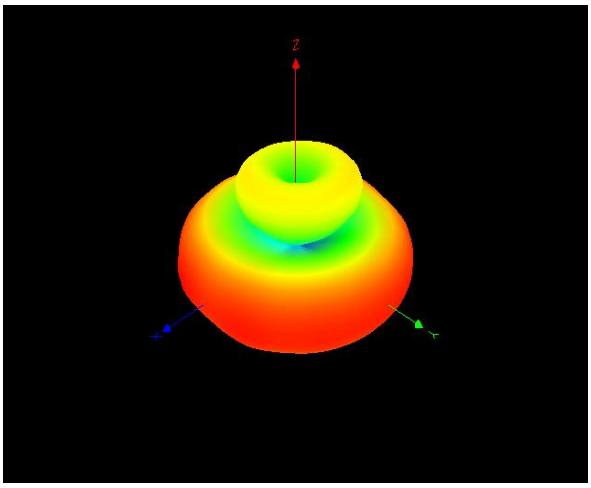

Free Walk Proprietary & Confidential © 2025 Free Walk Corporation. All rights reserved.

2D Patten

XOY 面

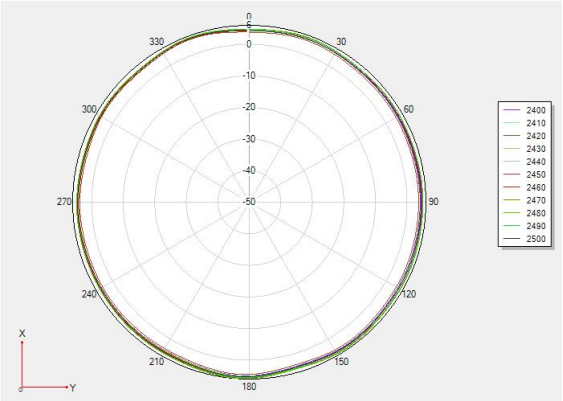

ZOX 面

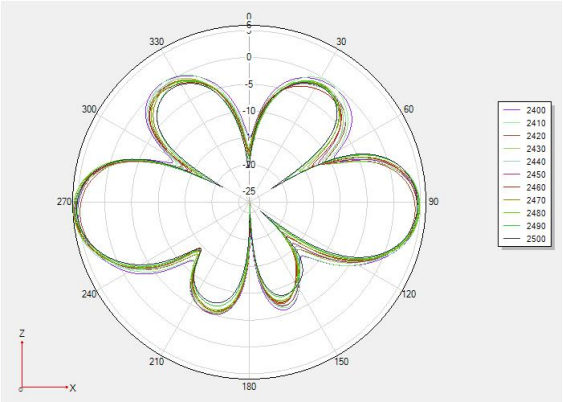

ZOY 面

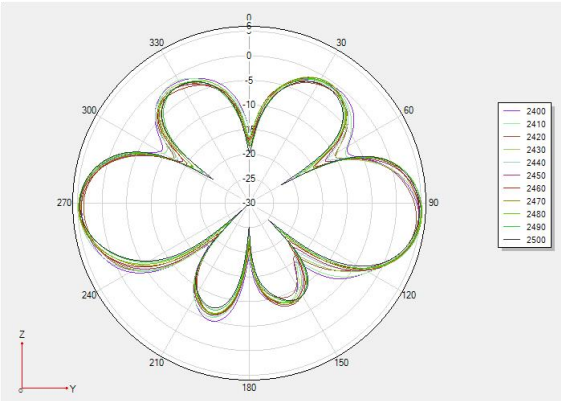

Free Walk Proprietary & Confidential © 2025 Free Walk Corporation. All rights reserved.

Shenzhen free travel communication technology Co., LTD
ROHS Report List for WIFI Antenna Material Components

Number	Raw Material Name	Raw material supplier (manufacturer)	Testing agency	Report Number	Test date	Detect expiration date	Notes
1	PC/PBT	yubang	CTI	A2240057268112001	2025/3/5	2026/3/5	PCPBT.pdf
2	PCB	junxuan	CTI	A2240256191101002E	2025/5/9	2026/5/9	FR-4 A2 ROHS.pdf
3	ABS	lejing	SGS	CANPC24004074902	2025/3/14	2026/3/14	ABS HP171-本色 ROHS_CN_240314.pdf
4	Tinned round copper wire	mingxing	CTI	A2240182175102001E	2025/4/12	2026/4/12	镀锡铜线A2240182175102001E (rohs2.0&8e) 2024.04.12.pdf
5	TIN	taiyuan	SGS	CANEC24003588604	2025/3/8	2026/3/8	CANEC24003588604(锡线.pdf
6	FEP BLUE	jianlong	CTI	A2240269286101007C	2025/5/21	2026/5/21	见龙 (护套) ROHS 蓝色中文.pdf
7	FEP Whine	jianlong	SGS	A2240269286101002C	2025/5/21	2026/5/21	见龙 (护套) ROHS 白色中文.pdf
8	Silk screen ink	Xinzheng Chemical	WT	WTH24F12305415C	2025/1/2	2026/1/2	新郑丽丝丝印油墨 [WI-JBB-KN4.1]+[HZ3]+[FT2-FT2]+[B-TBB+A-TZA-TR-TZ2-TZ3]CE[0.1].pdf
9	Solder MaskSolder Mask	Xinzheng Chemical	WT	WTH24F12305406C	2025/1/2	2026/1/2	新郑丽丝丝印油墨 [CE-KN7.1]+[HZ3]+[FT2-FT2]+[B-TBB+A-TZA-TR-TF2]+A+B+C[0.1].pdf
10	Nickel-Plated Steel	huapu	SGS	XMNPC24000170702	2025/3/6	2026/3/6	弹簧--XMIN2403000390PC01_CN.pdf

require:

1. The submission of component material reports must be in accordance with EU implementation requirements, including testing reports for indivisible care methods and named materials, as well as testing for other environmental regulations and requirements

2. If the submitted component materials are to be tested, they must include the composition of the original piece, all materials according to the department's packaging materials, social metal and other materials. No form of control report is accepted. Humorous acceptance of mixed testing reports within three types is accepted, and reports exceeding three types are not accepted

3. The company recognizes the reports provided by the following nine testing institutions, SGS, CTI ,ITS, Saibao, Noni, CCIC, bv, STS, set

4. If the first page of the testing report needs to be stamped with our company's official seal and the side needs to be stamped with a saddle stitch seal, each report must be provided. It is not allowed to alter or forge the price report. The supplier must first review the report themselves to ensure that the submitted report is valid, correct, complete, and the content is clear and distinguishable

此处盖公章

深圳自由行通信技术有限公司 品质专用章

Provide electronic copies of report requirements: the report can be scanned together with the list; It can also be scanned separately, but with corresponding numbers for easy querying

Product packaging specification

Product Name: antenna	Rea : A00
	Except for others

一: Antenna

二: Put them in PE bags, quantity is packed in (50 100pcs)
Subject to the actual situation

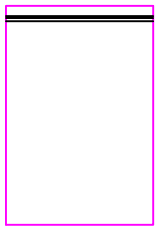

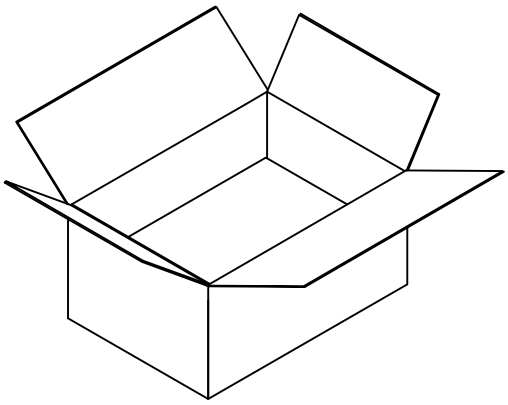

三: Put the antenna in the carton

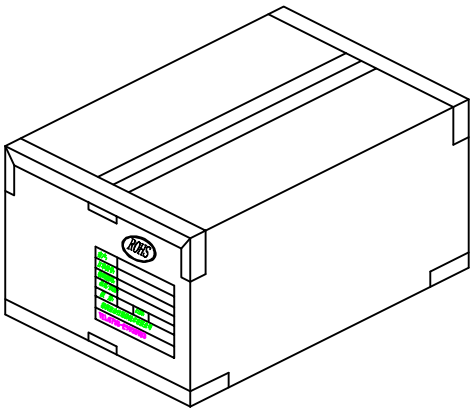

四: Seal the box and paste the production label and RoHS label on the outer box(actual situation shall prevail)