Testing Laboratory
3023

Test Report No:
2430454R-RFUSV03S-A

TEST REPORT
FCC Rules&Regulations

Product Name	EPD Monitor
Brand Name	AGILE, Engage MediaBoard
Model No.	ESX32LNLd, ESX32LNLc, Engage MediaBoard 32W, Jetblack
FCC ID	2AYHFM8821CU1
Applicant´s Name / Address	Agile Display Solutions Co., Ltd No. 12, Jingzhong Rd., Yongkang Dist., Tainan City, 710 Taiwan
Manufacturer's Name	Agile Display Solutions Co., Ltd
Test Method Requested, Standard	FCC CFR Title 47 Part 15 Subpart E Section 15.407 ANSI C63.10-2013
Verdict Summary	IN COMPLIANCE
Documented by Genie Chang	Genie Chang
Tested by Bill Lin	Bill Lin
Approved by Alan Chen	Alan Chen
Date of Receipt	2024/03/15
Date of Issue	2024/05/08
Report Version	V1.0

INDEX

page

Competences and Guarantees....4
General Conditions....4
Revision History....5
Summary of Test Result....6
1. General Information....7
1.1. EUT Description....7
1.2. EUT Information....8
1.3. Testing Location Information....8
1.4. Measurement Uncertainty....9
1.5. List of Test Equipment....10
2. Test Configuration of EUT....11
2.1. Test Condition....11
2.2. Test Frequency Mode....11
2.3. Duty Cycle....13
2.4. Measurement Configuration....14
2.5. Tested System Details....15
2.6. Configuration of tested System....15
2.7. EUT Operating Procedures....16
3. AC Power Line Conducted Emission....17
3.1. Test Setup....17
3.2. Test Limit....17
3.3. Test Procedure....17
3.4. Test Result of AC Power Line Conducted Emission....18
4. Emission Bandwidth....19
4.1. Test Setup....19
4.2. Test Limit....19
4.3. Test Procedure....19
4.4. Test Result of Emission Bandwidth....19
5. Maximum Conducted Output Power....20
5.1. Test Setup....20
5.2. Test Limit....21
5.3. Test Procedure....21
5.4. Test Result of Maximum Conducted Output Power....21
6. Maximum Power Spectral Density....22
6.1. Test Setup....22
6.2. Test Limit....22
6.3. Test Procedure....22

6.4. Test Result of Maximum Power Spectral Density 22
7. Transmitter Radiated Spurious Emission 23
7.1. Test Setup 23
7.2. Test Limit 24
7.3. Test Procedure 25
7.4. Test Result of Transmitter Radiated Spurious Emission 25
Appendix A. Test Result of AC Power Line Conducted Emission
Appendix B. Test Result of Emission Bandwidth
Appendix C. Test Result of Maximum Conducted Output Power
Appendix D. Test Result of Maximum Power Spectral Density
Appendix E. Test Result of Transmitter Radiated Spurious Emission
Appendix F. Test Setup Photograph

Competences and Guarantees

DEKRA is a testing laboratory competent to carry out the tests described in this report.
In order to assure the traceability to other national and international laboratories, DEKRA has a calibration and maintenance program for its measurement equipment.

DEKRA guarantees the reliability of the data presented in this report, which is the result of the measurements and the tests performed to the item under test on the date and under the conditions stated in the report and it is based on the knowledge and technical facilities available at DEKRA at the time of performance of the test.

DEKRA is liable to the client for the maintenance of the confidentiality of all information related to the item under test and the results of the test.

The results presented in this Test Report apply only to the particular item under test established in this document.

IMPORTANT: No parts of this report may be reproduced or quoted out of context, in any form or by any means, except in full, without the previous written permission of DEKRA.

General Conditions

1. The test results relate only to the samples tested.
2. The test results shown in the test report are traceable to the national/international standard through the calibration report of the equipment and evaluated measurement uncertainty herein.
3. This report must not be used to claim product endorsement by TAF or any agency of the government.
4. The test report shall not be reproduced without the written approval of DEKRA Testing and Certification Co., Ltd.
5. Measurement uncertainties evaluated for each testing system and associated connections are given here to provide the system information for reference. Compliance determinations do not take into account measurement uncertainties for each testing system, but are based on the results of the compliance measurement.

Revision History

Version	Description	Issued Date
V1.0	Initial issue of report	2024/05/08

Summary of Test Result

Report Clause	Test Items	Result (PASS/FAIL)	Remark
3	AC Power Line Conducted Emission	PASS	-
4	Emission Bandwidth	PASS	-
5	Maximum Conducted Output Power	PASS	-
6	Maximum Power Spectral Density	PASS	-
7	Transmitter Radiated Spurious Emission	PASS	-

Comments and Explanations
The declared of product specification for EUT presented in the report are provided by the manufacturer, and the manufacturer takes all the responsibilities for the accuracy of product specification.

1. General Information

1.1. EUT Description

Frequency Range	5150 ~ 5250 MHz 5250 ~ 5350 MHz 5470 ~ 5725 MHz 5725 ~ 5850 MHz	
Operating Frequency / Channel Number	IEEE 802.11a/n/ac (20 MHz)	5180 ~ 5240 MHz / 4 Channels 5260 ~ 5320 MHz / 4 Channels 5500 ~ 5720 MHz / 12 Channels 5745 ~ 5825 MHz / 5 Channels
	IEEE 802.11n/ac (40 MHz)	5190 ~ 5230 MHz / 2 Channels 5270 ~ 5310 MHz / 2 Channels 5510 ~ 5710 MHz / 6 Channels 5755 ~ 5795 MHz / 2 Channels
	IEEE 802.11ac (80 MHz)	5210 MHz / 1 Channel 5290 MHz / 1 Channel 5530 ~ 5690 MHz / 3 Channels 5775 MHz / 1 Channel
Type of Modulation	IEEE 802.11a/n	OFDM-BPSK, QPSK, 16QAM, 64QAM
	IEEE 802.11ac	OFDM-BPSK, QPSK, 16QAM, 64QAM, 256QAM

Accessories Information					
No.	Equipment Name	Brand Name	Model No.	Rating	Remark
1	Battery	A&S Power Technology Co.,Ltd	AS-18650-2600 -416	DC 14.8V 2600mAh	

The difference for each model is shown as below:

Brand Name	Model No.	Difference
AGILE	ESX32LNLd	Without Type-C I/O port and charged by battery pack.
	ESX32LNLc	Charge with Type-C I/O port.
Engage MediaBoard	Engage MediaBoard 32W, Jetblack	1.Without Type-C I/O port and charged by battery pack. 2.Different from ESX32LNLd in brand name only.

From the above models, model: ESX32LNLc was selected as representative model for the test and its data was recorded in this report.

Antenna Information				
Item.	Manufacturer	Model No.	Type	Antenna Gain (dBi)
1	BPI	11800M2P0101 (11060735172-AA)	PCB	1.59 dBi for 5150~5250 MHz 1.71 dBi for 5250~5350 MHz 2.69 dBi for 5470~5725 MHz 2.16 dBi for 5725~5850 MHz

Note:

1. The antenna gain as by the manufacturer provided.

   For 802.11a/n/ac Mode: (1TX, 1RX)
   Only Ant. 0 can be used as transmitting/receiving antenna.

1.2. EUT Information

EUT Power Type	From USB Type-C / Battery pack			
EUT Function	☒	Point-to-multipoint	☐	Point-to-point
TPC Function	☒	With TPC Function	☐	Without TPC Function
Weather Band (5600 ~ 5650 MHz)	☒	With 5600 ~ 5650 MHz	☐	Without 5600 ~ 5650 MHz
Beamforming Function	☐	With beamforming	☒	Without beamforming

1.3. Testing Location Information

USA	FCC Registration Number: TW0033
Canada	CAB Identifier Number: TW3023 / Company Number: 26930

Site Description	Accredited by TAF
	Accredited Number: 3023

Test Laboratory	DEKRA Testing and Certification Co., Ltd.
	Linkou Laboratory
Address	No.5-22, Ruishukeng Linkou District, New Taipei City, 24451, Taiwan, R.O.C.
Performed Location	No. 26, Huaya 1st Rd., Guishan Dist.,Taoyuan City 333411, Taiwan, R.O.C.
Phone Number	+886-3-275-7255
Fax Number	+886-3-327-8031

Ambient conditions in the laboratory:

Performed Item	Items	Required	Actual	Test Date
AC Power Line Conducted Emission	Temperature (°C)	10~40 ℃	25.0 ℃	2024/04/18
	Humidity (%RH)	10~90 %	66.0 %	
Radiated Emission	Temperature (°C)	10~40 ℃	22.3 ℃	2024/04/10~2024/04/30
	Humidity (%RH)	10~90 %	58.0 %	
Conducted Emission	Temperature (°C)	10~40 ℃	24.7 ℃	2024/03/22~2024/4/30
	Humidity (%RH)	10~90 %	61.1 %	

1.4. Measurement Uncertainty

Uncertainties have been calculated according to the DEKRA internal document with the emissions test results be included in the report. The measurement uncertainties given below are based on a 95% confidence level (based on a coverage factor (k=2).

Test item	Uncertainty
AC Power Line Conducted Emission	±3.50 dB
Emission Bandwidth	±1580.61 Hz
Maximum Conducted Output Power	Spectrum Analyzer: ±2.14 dB Power Meter: ±1.05 dB
Maximum Power Spectral Density	±2.14 dB
Transmitter Radiated Spurious Emission	9 kHz~30 MHz: ±3.88 dB 30 MHz~1 GHz: ±4.42 dB 1 GHz~18 GHz: ±4.28 dB 18 GHz~40 GHz: ±3.90 dB
Duty Cycle	±0.53 %

1.5. List of Test Equipment

For Conduction Measurements / HY-SR01

	Equipment	Manufacturer	Model No.	Serial No.	Cal. Date	Due Date
V	EMI Test Receiver	R&S	ESR7	101601	2023/06/20	2024/06/19
V	Two-Line V-Network	R&S	ENV216	101478	2023/09/13	2024/09/12
V	Two-Line V-Network	R&S	ENV216	101307	2023/08/17	2024/08/16
V	Coaxial Cable	SUHNER	RG400_BNC	RF001	2024/01/10	2025/01/09

Note:
1. All equipments are calibrated every one year.
2. The test instruments marked with “V” are used to measure the final test results.
3. Test Software Version: e3 230303 dekra V9.

For Conducted Measurements / HY-SR02

	Equipment	Manufacturer	Model No.	Serial No.	Cal. Date	Due Date
V	Spectrum Analyzer	R&S	FSV30	103465	2023/06/14	2024/06/13
V	Spectrum Analyzer	KEYSIGHT	N9010A	MY53470892	2023/11/09	2024/11/08
V	Peak Power Analyzer	KEYSIGHT	8990B	MY51000539	2023/05/15	2024/05/14
V	Wideband Power Sensor	KEYSIGHT	N1923A	MY59240002	2023/05/18	2024/05/17
V	Wideband Power Sensor	KEYSIGHT	N1923A	MY59240003	2023/05/18	2024/05/17

Note:
1. All equipments are calibrated every one year.
2. The test instruments marked with “V” are used to measure the final test results.
3. Test Software Version: RF Conducted Test Tools R3 V3.0.0.14.

For Radiated Measurements /HY-CB01

	Equipment	Manufacturer	Model No.	Serial No.	Cal. Date	Due Date
V	Loop Antenna	AMETEK	HLA6121	56736	2023/05/23	2024/05/22
V	Bi-Log Antenna	SCHWARZBECK	VULB9168	9168-0675	2023/08/09	2025/08/08
V	Horn Antenna	RF SPIN	DRH18-E	210802A18ES	2024/03/28	2025/03/27
V	Horn Antenna	Com-Power	AH-840	101100	2023/10/02	2025/10/01
V	Pre-Amplifier	SGH	0301	20211007-7	2024/01/10	2025/01/09
V	Pre-Amplifier	EMCI	EMC051845SE	980632	2024/01/10	2025/01/09
V	Pre-Amplifier	EMCI	EMC05820SE	980362	2024/01/10	2025/01/09
V	Pre-Amplifier	EMCI	EMC184045SE	980369	2024/01/10	2025/01/09
V	Coaxial Cable	EMCI	EMC102-KM-KM-600	1160314	2024/01/10	2025/01/09
V	Coaxial Cable	EMCI	EMC102-KM-KM-7000	170242	2024/01/10	2025/01/09
	Filter	MICRO TRONICS	BRM50702	G251	2024/01/05	2025/01/04
V	Filter	MICRO TRONICS	BRM50716	067	2024/01/05	2025/01/04
V	EMI Test Receiver	R&S	ESR3	102792	2024/01/05	2025/01/04
V	Spectrum Analyzer	R&S	FSV3044	101115	2024/01/11	2025/01/10
V	Coaxial Cable	SUHNER	SUCOFLEX 106	25450/6	2024/01/10	2025/01/09
V	Coaxial Cable	SGH	SGH18	2021003-8	2024/01/10	2025/01/09
V	Coaxial Cable	SGH	HA800	GD20110222-8	2024/01/10	2025/01/09
V	Coaxial Cable	EMCI	EMC106	151113	2024/01/10	2025/01/09

Note:
1. Bi-Log Antenna and Horn Antenna(AH-840) is calibrated every two years, the other equipments are calibrated every one year.
2. The test instruments marked with “V” are used to measure the final test results.
3. Test Software Version: e3 230303 dekra V9.

2. Test Configuration of EUT

2.1. Test Condition

EUT Operational Condition	
Testing Voltage	DC 5V by USB Type-C / DC 14.8V by Battery pack

2.2. Test Frequency Mode

Test Software Version	PuTTY / Version 0.73

Modulation	Frequency (MHz)	Power Setting
802.11a	5180	59
	5220	59
	5240	59
	5260	59
	5300	59
	5320	51
	5500	42
	5580	59
	5700	40
	5720	59
	5745	59
	5785	59
	5825	59
802.11ac (20 MHz)	5180	58
	5220	59
	5240	59
	5260	59
	5300	59
	5320	49
	5500	42
	5580	59
	5700	38
	5720	59
	5745	59
	5785	59
	5825	59

802.11ac (40 MHz)	5190	45
	5230	59
	5270	59
	5310	38
	5510	40
	5550	59
	5670	43
	5710	59
	5755	59
	5795	59
802.11ac (80 MHz)	5210	43
	5290	36
	5530	41
	5610	59
	5690	59
	5775	59

2.3. Duty Cycle

Modulation	On Times (ms)	On+Off Times (ms)	Duty Cycle (%)	Duty Factor (dB)	VBW (Hz)
802.11a	2.0580	2.1070	97.67	0.10	500
802.11ac (20 MHz)	1.9250	1.9950	96.49	0.16	1000
802.11ac (40 MHz)	0.9450	1.0640	88.82	0.52	2000
802.11ac (80 MHz)	0.4550	0.5450	83.49	0.78	3000

802.11a

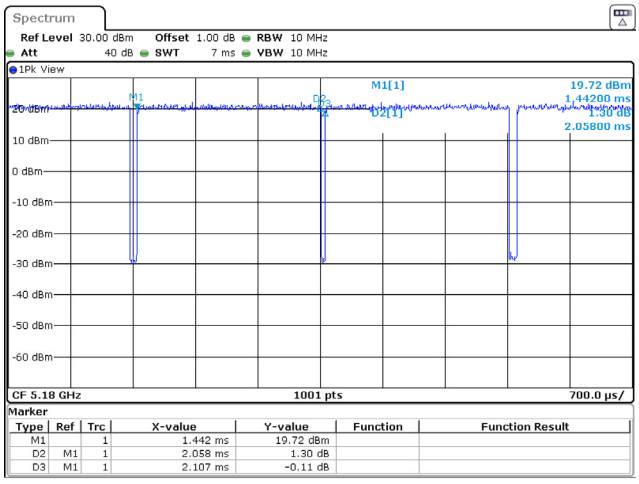

802.11ac (20 MHz)

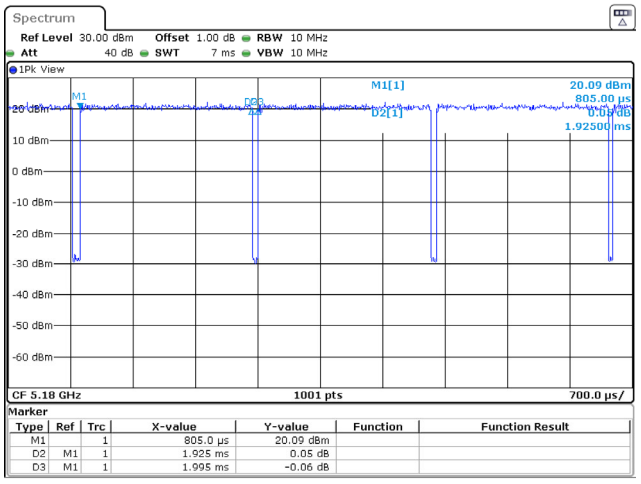

802.11ac (40 MHz)

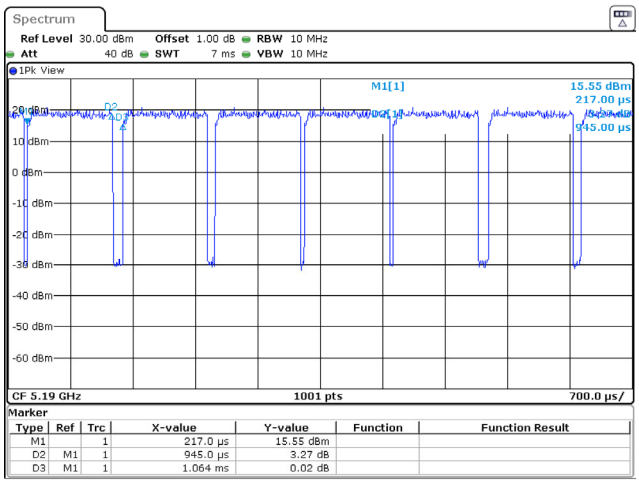

802.11ac (80 MHz)

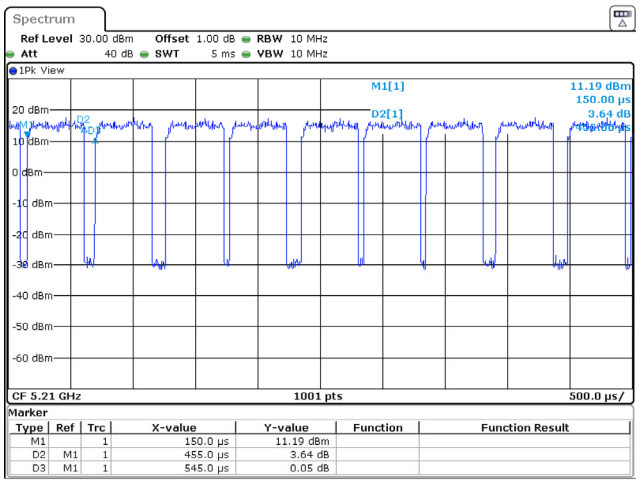

2.4. Measurement Configuration

Test Mode	Mode 1 (Transmit)	802.11a
		802.11ac (20 MHz)
		802.11ac (40 MHz)
		802.11ac (80 MHz)

Note:

1. Determining compliance shall be based on the results of the compliance measurement, not taking into account measurement instrumentation uncertainty.
2. For radiated emission below 1 GHz and AC power line conducted emission have performed all modes of operation were investigated and the worst-case emissions are reported.
3. The spectrum plot against conducted item only shows the worst case.
4. Lowest data rates are tested in each mode. Only worst case is shown in the report.
   (802.11a is 6Mbps, 802.11ac 20MHz/40MHz/80MHz is MCS0)
5. The modulation and bandwidth are similar for 802.11n mode for 20MHz/40MHz and 802.11ac mode for 20MHz/40MHz. Therefore, the worst case was investigated to representative the mode(802.11ac) in the test report.
6. The radiation measurements are performed in X, Y, Z axis positioning. Only the worst case is shown in the report.

2.5. Tested System Details

Type C port

No.	Equipment	Brand Name	Model No.	Serial No.	Power Cord
1	Power Adapter	ADAPTER TECH	APD065T-A200	N/A	N/A
2	Notebook PC	DELL	Latitude E5440	FS9TK32	N/A
3	Test Fixture	N/A	CH340G	N/A	N/A

2.6. Configuration of tested System

Type C port

Connection Diagram

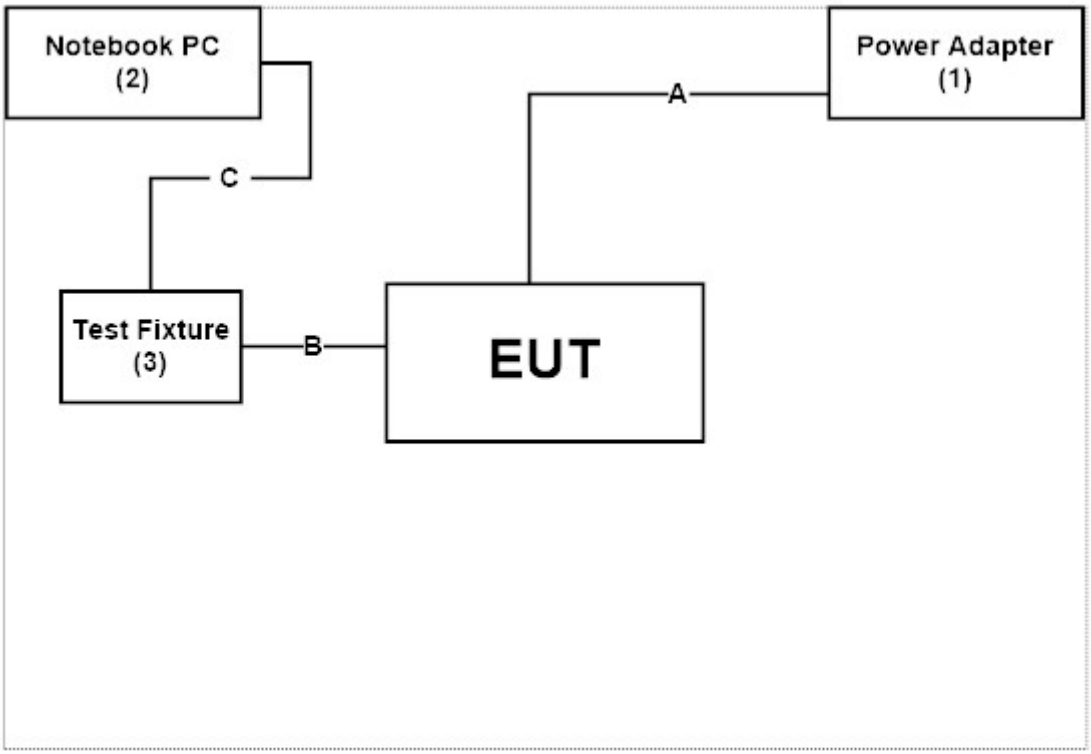

Signal Cable Type		Signal cable Description
A	Power Cable	Non-Shielded, 1m
B	Signal Cable	Non-Shielded, 0.84m
C	USB Cable	Non-Shielded, 1.8m

Battery pack

Connection Diagram

2.7. EUT Operating Procedures

1	Setup the EUT as shown in Section 2.6.
2	Execute software “PuTTY / Version 0.73” on the Notebook PC.
3	Configure the test mode, the test channel, and the data rate.
4	Verify that the EUT works properly.

3. AC Power Line Conducted Emission

3.1. Test Setup

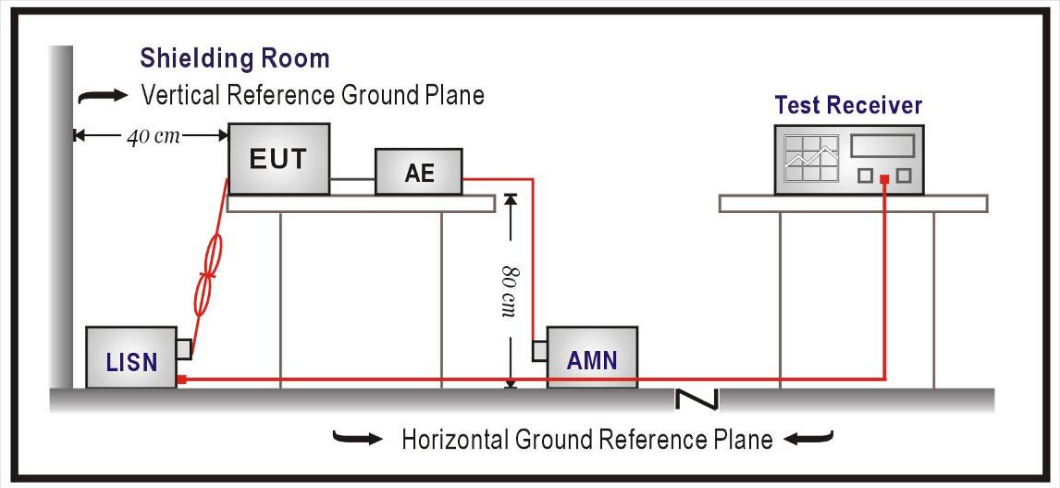

3.2. Test Limit

Frequency (MHz)	QP (dBuV)	AV (dBuV)
0.15 - 0.50	66 - 56	56 - 46
0.50 - 5.0	56	46
5.0 - 30	60	50

Remark: In the above table, the tighter limit applies at the band edges.

3.3. Test Procedure

The EUT was setup according to ANSI C63.10: 2013. The EUT was placed on a platform of nominal size, 1 m by 1.5 m, raised 80 cm above the conducting ground plane. The vertical conducting plane was located 40 cm to the rear of the EUT. All other surfaces of EUT were at least 80 cm from any other grounded conducting surface. The EUT and simulators are connected to the main power through a line impedance stabilization network (LISN). The LISN provides a 50 ohm /50uH coupling impedance for the measuring equipment. The peripheral devices are also connected to the main power through a LISN. (Please refer to the block diagram of the test setup and photographs.)

Each current-carrying conductor of the EUT power cord, except the ground (safety) conductor, was individually connected through a LISN to the input power source.

The excess length of the power cord between the EUT and the LISN receptacle were folded back and forth at the center of the lead to form a bundle not exceeding 40 cm in length.

Conducted emissions were investigated over the frequency range from 0.15 MHz to 30 MHz using a receiver bandwidth of 9 kHz.

3.4. Test Result of AC Power Line Conducted Emission

Refer as Appendix A

4. Emission Bandwidth

4.1. Test Setup

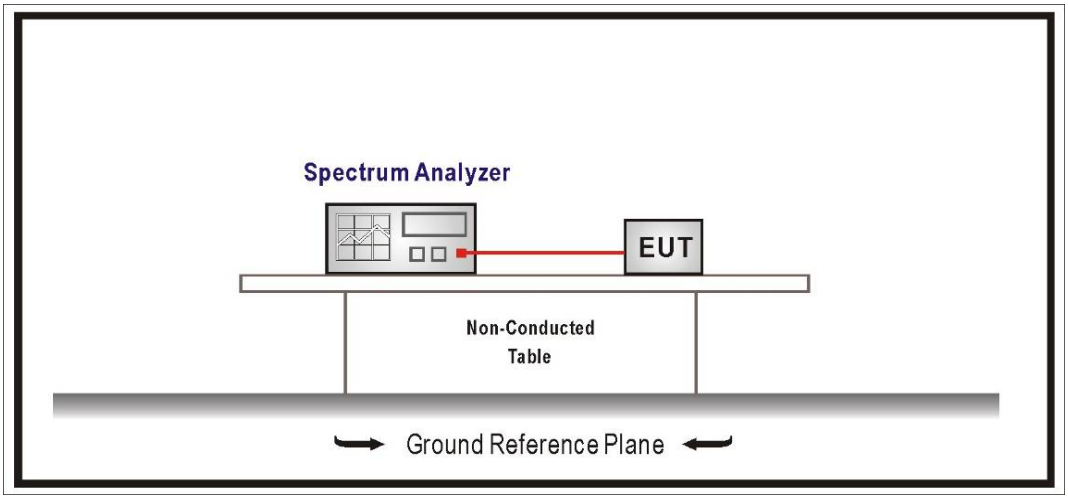

4.2. Test Limit

26dB Bandwidth : No Required

6dB Bandwidth ≧ 500kHz

4.3. Test Procedure

26dB Bandwidth :

The EUT was tested according to U-NII test procedure of 789033.

Set RBW 1% of the emission bandwidth, VBW equal to 3 times the RBW.

6dB Bandwidth :

Set RBW = 100kHz, VBW≧3xRBW, Sweep time=Auto, Set Peak detector.

4.4. Test Result of Emission Bandwidth

Refer as Appendix B

5. Maximum Conducted Output Power

5.1. Test Setup

For straddle channels:

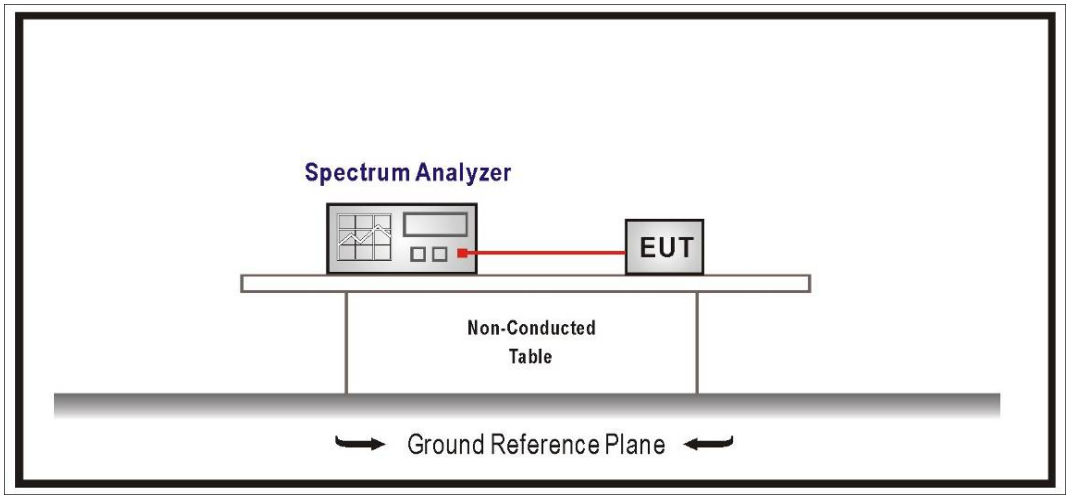

For othes channels:

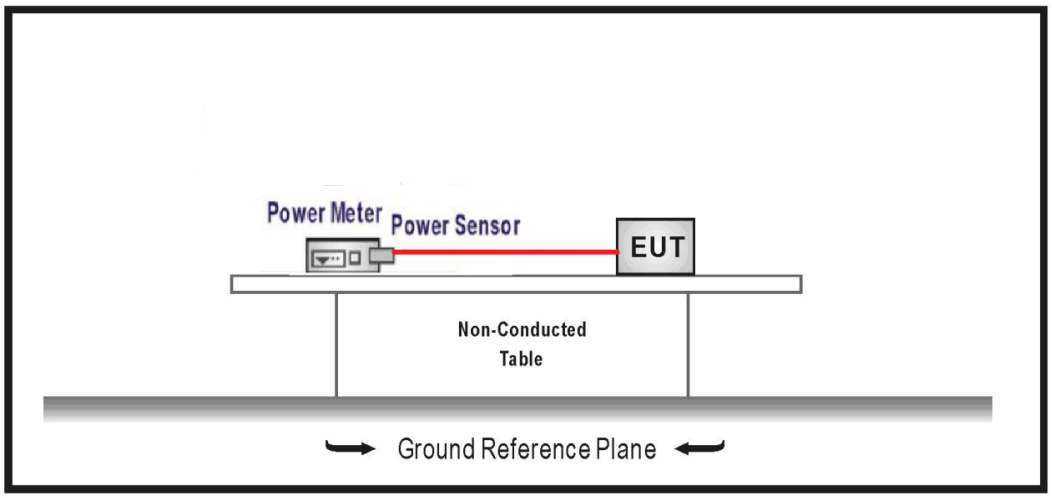

5.2. Test Limit

1. For an outdoor access point and an indoor access point operating in the band 5.15-5.25 GHz, the maximum conducted output power over the frequency band of operation shall not exceed 1 W provided the maximum antenna gain does not exceed 6 dBi. If transmitting antennas of directional gain greater than 6 dBi are used, both the maximum conducted output power and the maximum power spectral density shall be reduced by the amount in dB that the directional gain of the antenna exceeds 6 dBi. For client devices in the 5.15-5.25 GHz band, the maximum conducted output power over the frequency band of operation shall not exceed 250 mW provided the maximum antenna gain does not exceed 6 dBi. If transmitting antennas of directional gain greater than 6 dBi are used, both the maximum conducted output power and the maximum power spectral density shall be reduced by the amount in dB that the directional gain of the antenna exceeds 6 dBi.
2. For the 5.25-5.35 GHz and 5.47-5.725 GHz bands, the maximum conducted output power over the frequency bands of operation shall not exceed the lesser of 250 mW or 11 dBm + 10 log B, where B is the 26 dB emission bandwidth in megahertz. If transmitting antennas of directional gain greater than 6 dBi are used, both the maximum conducted output power and the maximum power spectral density shall be reduced by the amount in dB that the directional gain of the antenna exceeds 6 dBi.
3. For the band 5.725-5.850 GHz, the maximum conducted output power over the frequency band of operation shall not exceed 1 W. If transmitting antennas of directional gain greater than 6 dBi are used, both the maximum conducted output power and the maximum power spectral density shall be reduced by the amount in dB that the directional gain of the antenna exceeds 6 dBi.

5.3. Test Procedure

The EUT was setup to ANSI C63.10: 2013; tested to U-NII test procedure of 789033.

5.4. Test Result of Maximum Conducted Output Power

Refer as Appendix C

6. Maximum Power Spectral Density

6.1. Test Setup

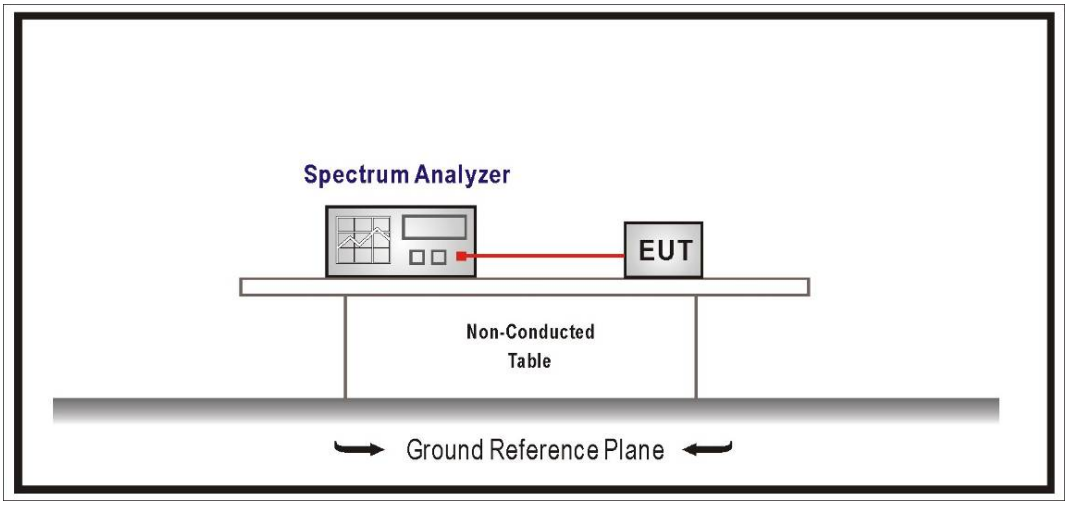

6.2. Test Limit

1. For the band 5.15 ~ 5.25 GHz, the peak power spectral density shall not exceed 17 dBm in any 1 MHz band. If transmitting antenna of directional gain greater than 6 dBi are used, the peak power spectral density shall be reduced by the amount in dB that directional gain of the antenna exceeds 6 dBi.
2. For client devices in the 5.15 ~ 5.25 GHz band, the maximum power spectral density shall not exceed 11 dBm in any 1 megahertz band. If transmitting antennas of directional gain greater than 6 dBi are used, both the maximum conducted output power and the maximum power spectral density shall be reduced by the amount in dB that the directional gain of the antenna exceeds 6 dBi
3. For the 5.25 ~ 5.35 GHz ,5470 ~ 5600 MHz and 5650 ~ 5725 MHz, the peak power spectral density shall not exceed 11 dBm in any 1-MHz band. If transmitting antenna of directional gain greater than 6 dBi are used, the peak power spectral density shall be reduced by the amount in dB that directional gain of the antenna exceeds 6 dBi.
4. For the band 5.725 ~ 5.850 GHz, the peak power spectral density shall not exceed 30 dBm in any 500 kHz band. If transmitting antenna of directional gain greater than 6 dBi are used, the peak power spectral density shall be reduced by the amount in dB that directional gain of the antenna exceeds 6 dBi.

6.3. Test Procedure

The EUT was setup to ANSI C63.10: 2013; tested to U-NII test procedure of 789033.

6.4. Test Result of Maximum Power Spectral Density

Refer as Appendix D

7. Transmitter Radiated Spurious Emission

7.1. Test Setup

9 kHz ~ 30 MHz

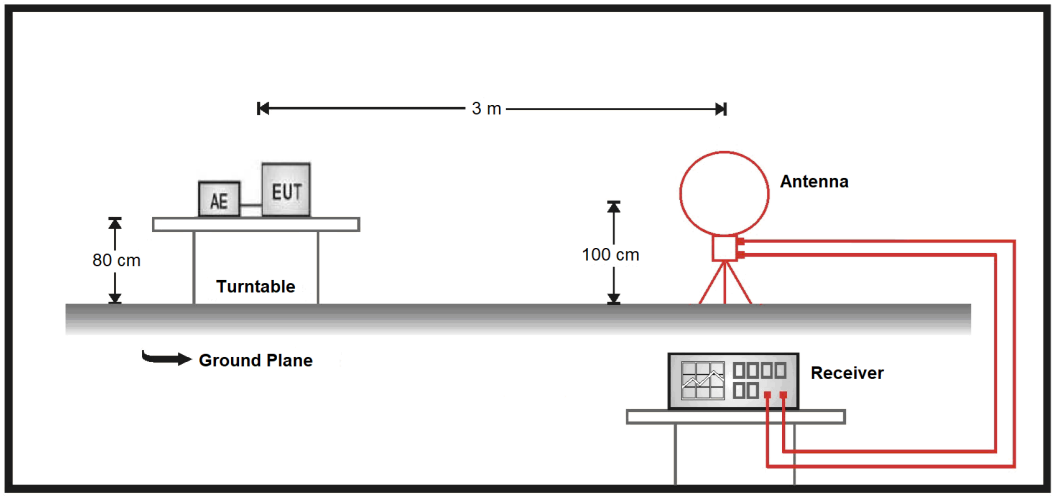

30 MHz ~ 1 GHz

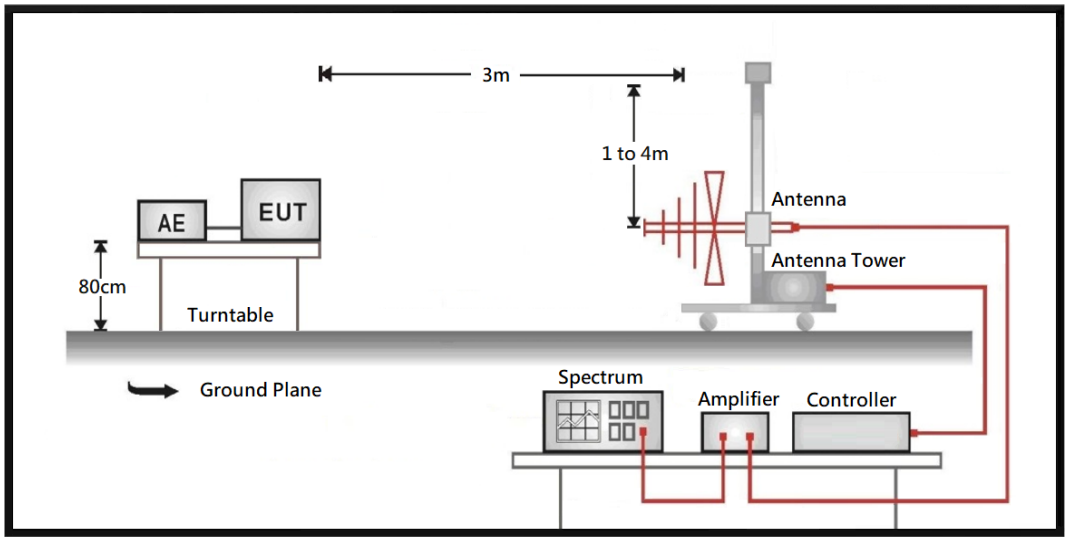

Above 1 GHz

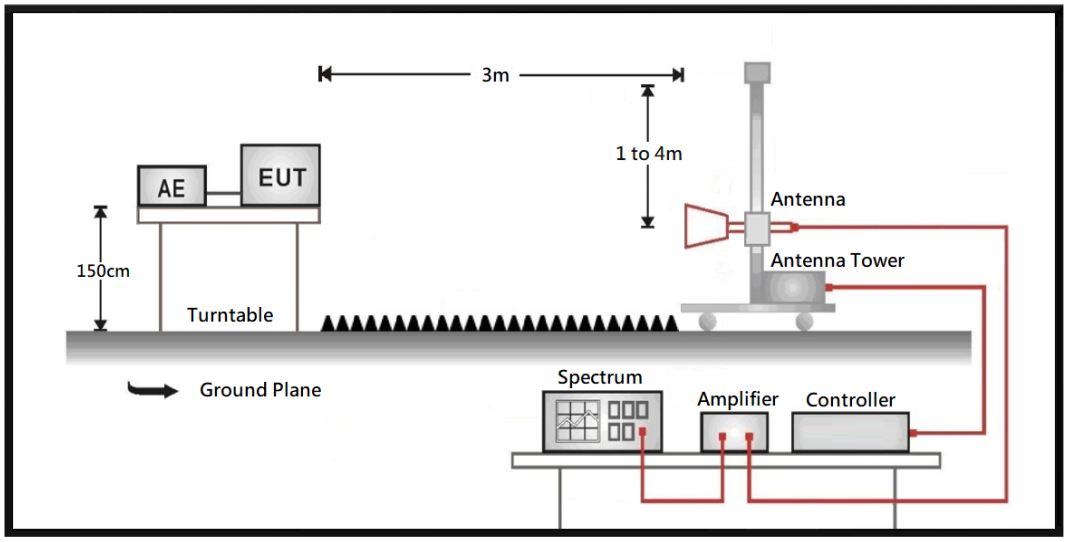

7.2. Test Limit

Frequency (MHz)	Field strength (uV/m)	Field strength (dBuV/m)	Measurement distance (m)
0.009 – 0.490	2400/F(kHz)	20 log (2400/F(kHz))	300
0.490 – 1.705	24000/F(kHz)	20 log (24000/F(kHz))	30
1.705 - 30	30	29.5	30
30 - 88	100	40	3
88 - 216	150	43.5	3
216 - 960	200	46	3
Above 960	500	54	3

Remarks:

1. Field strength (dBuV/m) = 20 log Field strength (uV/m)
2. In the Above Table, the tighter limit applies at the band edges.
2. Distance refers to the distance in meters between the measuring instrument antenna and the closed point of any part of the device or system

Unwanted Emission out of the restricted bands Test Limit

Frequency (MHz)	EIRP Limit (dBm/MHz)	Equivalent Field Strength (dBuV/m@3m)
5150 – 5250	-27	68.2
5250 – 5350	-27	68.2
5470 – 5725	-27	68.2
5725 – 5850	-27 *1	68.2 *1
	10 *2	105.2 *2
	15.6 *3	110.8 *3
	27 *4	122.2 *4

*1 beyond 75 MHz or more above of the band edge.
*2 below the band edge increasing linearly to 10 dBm/MHz at 25 MHz above.
*3 below the band edge increasing linearly to a level of 15.6 dBm/MHz at 5 MHz above.
*4 from 5 MHz above or below the band edge increasing linearly to a level of 27 dBm/MHz at the band edge.

Remark:

The following formula is used to convert the equipment isotropic radiated power (eirp) to field strength:

E = $\frac{1000000\sqrt{30P}}{3}$ uV/m, where P is the eirp (Watts).

7.3. Test Procedure

The EUT and its simulators are placed on a turn table which is 0.8 or 1.5 meter above ground. The turn table can rotate 360 degrees to determine the position of the maximum emission level. The EUT was positioned such that the distance from antenna to the EUT was 3 meters.

The antenna can move up and down between 1 meter and 4 meters to find out the maximum emission level. Both horizontal and vertical polarization of the antenna are set on measurement. In order to find the maximum emission, all of the interface cables must be manipulated according to ANSI C63.10: 2013 on radiated measurement.

The additional latch filter below 1 GHz was used to measure the level of harmonics radiated emission during field dtrength of harmonics measurement.

The bandwidth below 1 GHz setting on the field strength meter is 120 kHz, above 1 GHz are 1 MHz.

The frequency range from 9 kHz to 10th harmonics and included The frequency range from the lowest oscillator frequency generated within the device up to the 10th harmonic was checked is checked.

7.4. Test Result of Transmitter Radiated Spurious Emission

Refer as Appendix E