4 in 1 Universal RF+Bluetooth LED Controller

SB.01029.04737

Bluetooth CE FC RoHS COMPLIANT

Important: *Read All Instructions Prior to Installation*

Function introduction

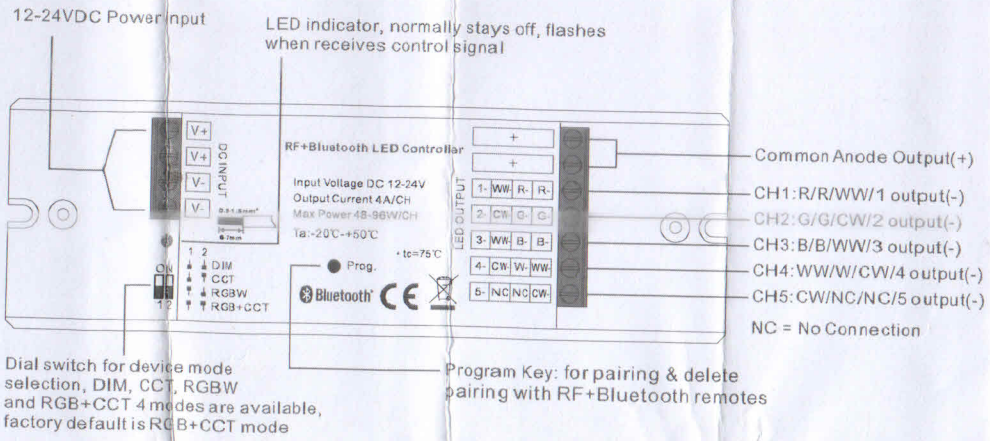

Product Data

Input Voltage	Output Current	Output Power	Remarks	Size(LxWxH)	Ambient Temperature	Max. Casing Temperature
12-24VDC	4A/CH	48-96W/CH	Constant voltage	145x46.5x16mm	-20℃ ~ +50℃	75℃

- 4 in 1 universal RF+Bluetooth LED controller, radio frequency: 2.4GHz
- 4 different device modes DIM, CCT, RGBW and RGB+CCT in 1 controller, and selectable by dial switch
- Enables to control ON/OFF, light intensity, color temperature, RGB color of connected LED lights
- Ultra powerful to control Single Color, CCT, RGBW, RGB+CCT LED strips
- Controlled through both smart App and remote controls, no gateway required
- Easy & quick pairing to the smart App by scanning QR code
- Mesh network, much longer control distance, transmits received signal to neighbor devices
- Up to 30m transmission distance between every two neighbor devices
- Encrypted two-way communication, quick status feedback, safe & reliable data transmission
- Compatible with universal RF+Bluetooth remotes, each LED controller can pair to max. 8 remotes
- Waterproof grade: IP20

Safety & Warnings

- DO NOT install with power applied to device.
- DO NOT operate the dial switches for device mode selection with power applied to device.
- DO NOT expose the device to moisture.

Operation

Pair/delete the pairing with RF+Bluetooth remote

1. Do wiring according to connection diagram.
2. Pair LED controller with RF+Bluetooth remote: please refer to the instruction of the remote that you would like to pair with.
3. Delete the pairing:
   (1) Wire up the LED controller correctly, power on.
   (2) Press and hold down the " **Prog.**" button on the controller for over 3 seconds until the connected light flashes, which means well deleted.

Pair with smart APP

1. Do wiring according to connection diagram.
2. Please refer to the **EasyThings** App user manual for details of adding device.

Wiring Diagram

1) RGB+CCT Mode

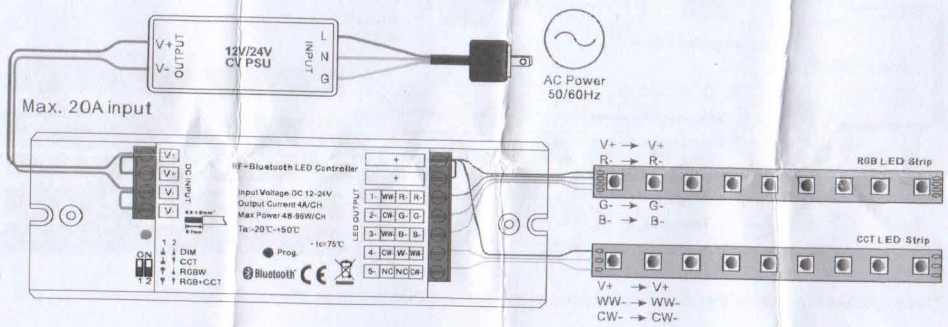

Note: please make sure the dial switches are at position for RGB+CCT mode as shown in above diagram.

2) RGBW Mode

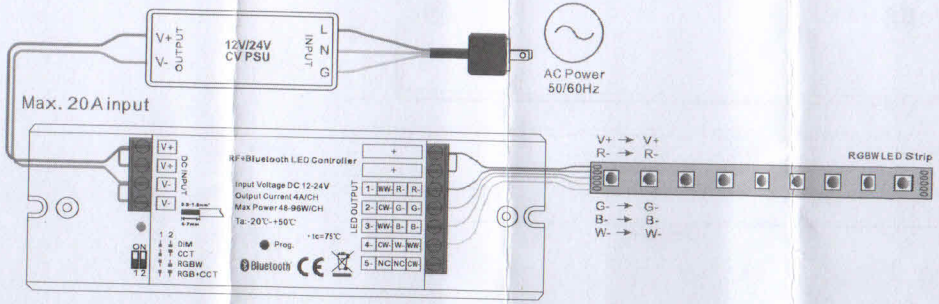

Note: please make sure the dial switches are at position for RGBW mode as shown in above diagram.

3) CCT Mode

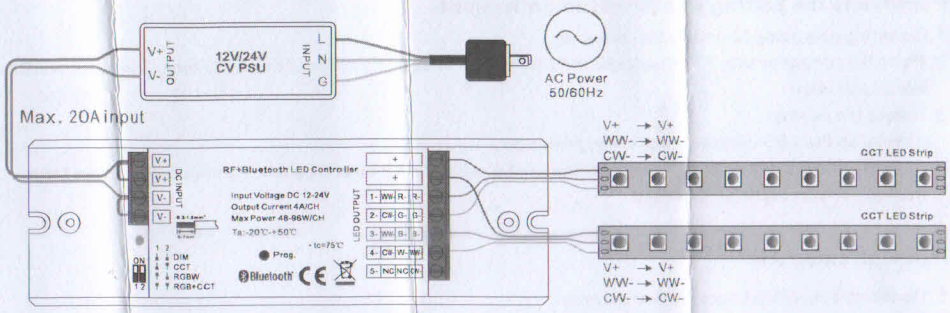

Note: please make sure the dial switches are at position for CCT mode as shown in above diagram.

4) DIM Mode

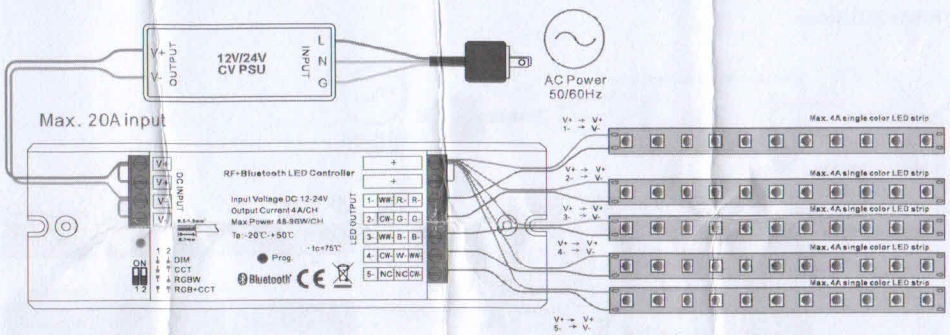

Note: please make sure the dial switches are at position for DIM mode as shown in above diagram.

Product Dimension

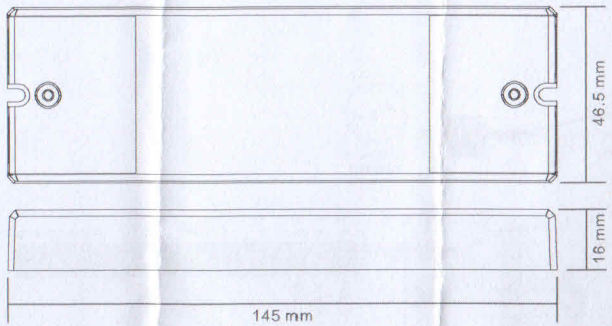

FCC Caution:

This device complies with part 15 of the FCC Rules. Operation is subject to the following two conditions: (1) This device may not cause harmful interference, and (2) this device must accept any interference received, including interference that may cause undesired operation.

Any Changes or modifications not expressly approved by the party responsible for compliance could void the user's authority to operate the equipment.

Note: This equipment has been tested and found to comply with the limits for a Class B digital device, pursuant to part 15 of the FCC Rules. These limits are designed to provide reasonable protection against harmful interference in a residential installation. This equipment generates uses and can radiate radio frequency energy and, if not installed and used in accordance with the instructions, may cause harmful interference to radio communications. However, there is no guarantee that interference will not occur in a particular installation. If this equipment does cause harmful interference to radio or television reception, which can be determined by turning the equipment off and on, the user is encouraged to try to correct the interference by one or more of the following measures:

-Reorient or relocate the receiving antenna.

-Increase the separation between the equipment and receiver.

-Connect the equipment into an outlet on a circuit different from that to which the receiver is connected.

-Consult the dealer or an experienced radio/TV technician for help.

This equipment complies with FCC radiation exposure limits set forth for an uncontrolled environment.