DC-LINK-LR2 / DC-LINK-ULR1

Long Range Wireless HDMI/SDI HD Video Transmission Suite for Indoor use

Manual / Handbuch

Introduction

Congratulations on purchasing the DC-Link-ULR1 Video Transmission System. Please read this manual carefully before operating your product, and ensure it is kept in a safe place.

The technology contained in this product, including the device itself as well as related software and trademarks, is protected by law. Any duplication or reproduction without the written permission of the copyright owner is prohibited, in part or in full. All third-party brands or copyrights mentioned in this manual are the property of their respective owners.

This product has a limited warranty of one year. Warranty may be voided by:

- Physical damage to the product
- Any damage caused by improper use, maintenance or storage
- Damage resulting from the use of incorrect power supplies
- Damage not related to the design of the product or the quality of its manufacture

Safety Precautions

The Video Transmission System

Do not block or obstruct air vents, as this may cause short circuits, fire or electric shocks. Turn the device off immediately if it comes into contact with liquids.

The Power Supply

The device may be used with batteries or AC-DC power supplies of the voltage specified on the device or in the enclosed documentation.

If batteries are used, please ensure that the batteries are compatible and have no cracks or leaks.

Please use the enclosed power adapter. When using a third-party power adapter, please ensure that the adapter conforms to the specifications of the device and has the correct polarity.

Remove the power supply if:

- The device will not be used for an extended period of time
- The power cable is damaged
- The exterior of the device is damaged.

Operating Environments

- Due to current regulations governing the use of radio-based systems, this device is authorised for indoor use with the pre-installed channels five and six (by law, "indoor use" is defined as use in a building including places assimilated thereto in which the shielding will typically provide the necessary attenuation).
- Do not place the device on metallic surfaces, to ensure effective data transfer.
- Do not place the device on dirty or damp surfaces.
- Do not use the device in the proximity of water or in high humidity, near open fires or gas pipes, or near electrical mains.

Overview

The DC-Link-ULR1 is a high-performance WHDI video transmission system which transmits uncompressed video and audio signals up to 1000m with low latency (1 ms delay).

Due to the conscious decision not to implement the DFS (Dynamic Frequency Selection) System, which is compulsory for outdoor use, the device has a longer range, greater stability and better usability than comparable systems, but is only authorised for indoor use.

Transmitter and receiver both have 3G-HD-SDI and HDMI connectors (Plug & Play). When a video source is attached, the transmitter automatically selects the input (SDI is prioritised). The receiver's 3G-HD-SDI and HDMI outputs may be used simultaneously.

Characteristics

- **1000m Range**
  Transmission ranges of up to 1000m are possible with good line-of-sight and optimum antenna positioning
- **Rapid and Reliable Connectivity**
  The decision not to implement the DFS System compulsory for outdoor use, as well as the preinstalled transmission channels, mean there is no need for complex pairing procedures. In addition, transmission stability is increased
- **Real-Time Transmission**
  With a latency of less than 1ms, the system is suitable for live monitoring applications
- **Uncompressed Transmission**
  10-bit, 4:2:2 transmissions via 3G-SDI and HDMI without format conversion
- **Supports Formats up to and including 1080p 60Hz**
- **2- Channel Audio Transmission**
  Embedded audio transmission on CH1 & CH2 via SDI and HDMI, incl. formats such as Dolby TrueHD, DTS-Master etc.
- **License-free Frequency Band**
  Functions in the license-free 5GHz ISM frequency range from 5.1-5.9GHz
- **Multicast Support**
  1:1 or 1:n transmissions with up to four parallel systems
- **Metadata- and Timecode Transmission**
- **AES-128 Encryption**
- **Metal Casing**
  Transmitter and receiver are extremely durable
- **Variable Input Voltage**
  Input voltage range from 9.0-18.0V DC allows the system to be operated with a variety of batteries or power supplies
- **Status Displays**
  Status displays for DC power, video and RSSI signal strength
- **Mount**
  1/4" tripod mount
- **Battery Adapter Plate**
  Delivered with NPF/V-Mount battery plates as standard
- **Plug-and-Play Design**
  Ready to use without the need for complex configuration

Product Description

Transmitter:

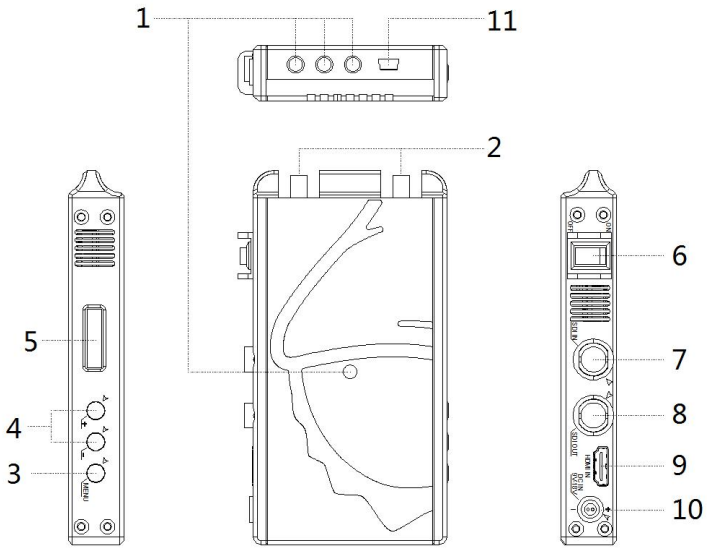

1) ¼" Tripod Mount
2) Antenna Connection: SMA (male) Connector
3) Menu button: Unlock/lock screen
4) Control button: Press to change the channels
5) LCD screen: Display channel, power level, temperature info.
6) ON-OFF: Power Switch
7) SDI-IN: 3G/HD/SD-SDI Input, (BNC Female Connector)
8) SDI LOOP-OUT: 3G/HD/SD-SDI Output, (BNC Female Connector)
9) HDMI-IN: HDMI Input (Type A Female Connector)
10) DC-IN: 9 – 18V DC
11) Mini USB: For firmware upgrade use.

Product Description

Receiver:

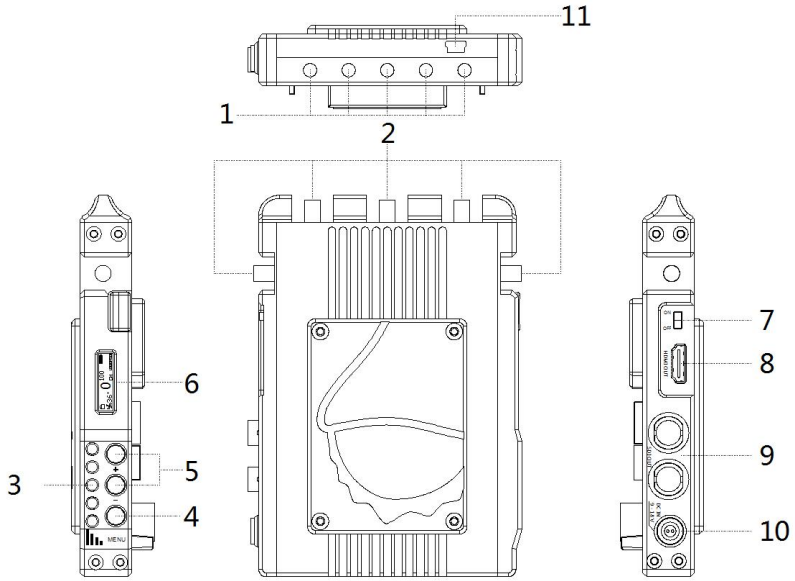

1) ¼" Tripod Mount
2) Antenna Connection: RP-SMA (male) Connector
3) RSSI Status Display: Signal Strength
4) Menu button: Unlock/lock screen
5) Control button: Press to change the channels
6) LCD screen: Display channel, BAT voltage, temperature info.
7) ON-OFF: Power Switch
8) HDMI-OUT: HDMI Output (Type A Female Connector)
9) Dual SDI-OUT: 3G/HD/SD-SDI Output, (BNC Female Connector)
10) DC-IN: 9.0 – 18.0V DC
11) Mini USB: For firmware upgrade use.

Operation

Transmitter

1. Connect the two omni-directional antennas to the SMA male connectors.
2. There is a ¼" tripod mount at the base of the transmitter if required.
3. Use the enclosed 4-pin male-to-D-TAP cable to connect to a power supply with a suitable voltage.

Receiver

1. There is a ¼" tripod mount at the base of the receiver if required.
2. Use the enclosed 4-pin male-to-D-TAP cable to connect to a power supply with a suitable voltage.
3. Ensure you have selected the frequency that corresponds to that of the transmitter.

Signal Distribution

Connect the camera's SDI or HDMI output to the transmitter's SDI or HDMI input. If both SDI and HDMI inputs are active, the transmitter will prioritise the SDI signal.

Connect the receiver's SDI or HDMI output to the SDI or HDMI input of the monitoring/recording device. During active transmission, both the SDI and the HDMI output on the receiver can be used simultaneously.

Ensure that the antennas are connected firmly, that all other connections are stable, and that the batteries are suitable.

Antenna Positioning

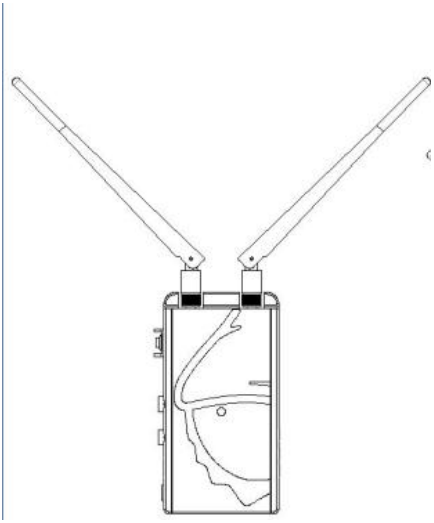

Position the antennas on transmitter and receiver at right angles as shown in the illustration. This ensures the best possible RF performance.

Install the transmitter and the receiver as high as possible (at least 1.5 metres above ground level), to maintain a good line-of-sight. During operation, try to keep the transmitter and the receiver at similar heights.

Avoid obstacles such as walls, trees, water and steel structures between transmitter and receiver as much as possible.

The connection is at its strongest when the flat surfaces of the transmitter and receiver face each other (see illustration).

Choosing a Channel

1. To press and hold the “Menu” key with 2s, this unlock icon” ” shown on the OLED.
2. To press key “+” or “-“ to select this desired channel and then press this “MENU” key to confirm

The system functions with 4 channels in the license-free 5 GHz ISM frequency band.

Both the transmitter and the receiver have a frequency selector with positions from 1-4.

Both the transmitter and the receiver have to be set [illegible] communicate with each other. If several systems are used at once, then the channels used should be as far from each other as possible to avoid interference or a reduction in range. A maximum number of 4 systems simultaneously is recommended.

!

Operation

RSSI Display

The RSSI (Wireless Received Signal Strength Indicator) display shows the strength of the signal, allowing the operator to ensure the system is working reliably.

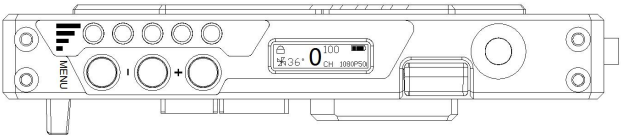

Display	Status	Description
RSSI	0-1 LEDs	Radio signal strength is weak and artefacts are visible in the video signal
	2-3 LEDs	Radio signal strength is normal and video quality is good
	4-5 LEDs	Radio signal strength is very strong and video quality is very good

Operation

Establishing a Connection

Once all previous steps have been performed, turn on the transmitter and the receiver using the power switch.

Once the transmitter recognizes a video input, the video format will show on the LCD screen.

It takes approximately 10-30 seconds for the transmitter to connect to the receiver. During this brief period, the receiver's video out displays "Waiting for connection".

Maintenance

Please do not attempt to repair, modify or alter these devices under any circumstances.

Clean the devices with a soft, clean, dry and lint-free cloth. Do not open the devices, they contain no user-serviceable parts.

Storage

The devices can be stored at temperatures between -20°C and 60°C. For long-term storage, please use the original transport case and avoid environmental conditions such as high humidity, dust, or excessively acidic or base surroundings.

Warning!

To ensure your own safety, please use only high-quality brand name batteries, and follow the safety information and instructions provided by the manufacturer.

Troubleshooting

	Possible Cause	Possible Solution
No video output	Lack of power	Check power supplies of transmitter and receiver and ensure that all cables are connected correctly and that there is sufficient power
	Antennas	Ensure antennas are not damaged and are firmly connected
	Video connection cable	Examine the transmitter's "Video" LED display. If the LED is dark, check the HDMI or SDI connection cable
	Frequency selection	Ensure that the transmitter and receiver are set to the same channel
	Unsupported video format	Check your selected video format agains the product's technical specifications
Inadequate video quality	Connections	Check to ensure that all SDI or HDMI cables are firmly connected
	Range is too great or signal is obstructed	Check how many "RSSI" LEDs are lit on the receiver. For decent quality, at least 2-3 LEDS should be lit. If only one is lit, the signal is weak and the distance between transmitter and receiver should be reduced. Alternatively, obstacles between the devices should be removed or another channel selected
	Radio signal is experiencing interference	Wait one minute then restart transmitter and receiver or change the frequency channel

Technical Specifications

	Transmitter	Receiver
Connections	1x SDI Input (BNC female) 1x SDI Output (BNC female) 1x HDMI Input (Type A female) 2x Antenna (RP-SMA male) 1x DC Input (4-pin female)	2x SDI Output (BNC female) 1x HDMI Output (Type A female) 5x Antenna (RP-SMA male) 1x DC Input (4-pin female)
Power	9.0 – 18.0V DC	9.0 – 18.0V DC
Power Consumption	< 8 W	< 8 W
Dimensions (LxBxH), w/o Antennas	143.5 x 74.5 x 21.4mm	147.8 x 100 x 20mm
Weight	380g	540g
Supported Video Formats	1080p(60, 59.94, 50, 30, 29.97, 25, 24, 23.98) 1080i (60, 59.94, 50) 720p (60, 59.94, 50) 576i (50) 480i (59,94)	1080p(60, 59.94, 50, 30, 29.97, 25, 24, 23.98) 1080i (60, 59.94, 50) 720p (60, 59.94, 50) 576i (50) 480i (59,94)
Audio Format	SDI Embedded 2 Channel Audio 24bit/48kHz	SDI Embedded 2 Channel Audio 24bit/48kHz
Displays	0.91 inch OLED panel	0.91 inch OLED panel 5 LEDs for RSSI indicator
Transmitting Power	Less than 20 dBm	-
Receiver Sensitivity	-	- 75 dBm
Bandwidth	40MHz	40MHz
Operating Temperature	0 – 40°C (Operation) -20 – 60°C (Storage)	0 – 40°C (Operation) -20 – 60°C (Storage)
Certification	CE	CE

Included with Purchase

1x Transmitter

1x Receiver

9x External Antennas (can be ordered individually)

2x DC Adapter Cables from Anton Bauer (D-Tap) (m) to 4-pin DC Connector(m)

2x Power Supplies

1x Magic-Arm with 1/4" Screw

1x Hot Shoe Adapter

2x Slot Screwdriver

Notes

DwarfConnection OG
Münzfeld 51,
A-4810 Gmunden, Austria
office@dwarfconnection.com
www.dwarfconnection.com

Errors and omissions excepted.
Fehler und Änderungen vorbehalten.

FCC Warning

This device complies with part 15 of the FCC rules. Operation is subject to the following two conditions: (1) this device may not cause harmful interference, and (2) this device must accept any inte rference received, including interference that may cause undesired operation.

Changes or modifications not expressly approved by the party responsible for compliance could void the user's authority to operate the equipment.

NOTE: This equipment has been tested and found to comply with the limits for a Class B digital device, pursuant to part 15 of the FCC Rules. These limits are designed to provide reasonable protection against harmful interference in a residential installation. This equipment generates uses and can radiate radio frequency energy and, if not installed and used in accordance with the instructions, may cause harmful interference to radio communications. However, there is no guarantee that interference will not occur in a particular installation. If this equipment does cause harmful interferenceto radio or television reception, which can be determined by turning the equipment off and on, the user is encouraged to try to correct the interference by one or more of the following measures:

- Reorient or relocate the receiving antenna.
- Increase the separation between the equipment and receiver.
- Connect the equipment into an outlet on a circuit different from that to which the receiver is connected.
- Consult the dealer or an experienced radio/TV technician for help.

Radiation Exposure Statement

This equipment complies with FCC radiation exposure limits set forth for an uncontrolled environment. This equipment should be installed and operated with minimum distance 20cm between the radiator and your body.