TEST REPORT

Report No.:	BCTC2011000670E
Applicant:	SHENZHEN TOPWAY TECHNOLOGY CO., LTD.
Product Name:	Wi-Fi Repeater and Extender
Model/Type Ref.:	KN300
Tested Date:	Nov. 09, 2020 to Nov. 18, 2020
Issued Date:	Nov. 19, 2020

Shenzhen BCTC Testing Co., Ltd.

FCC ID: 2AYJCKN300

Product Name:	Wi-Fi Repeater and Extender
Trademark:	N/A
Model/Type Ref.:	KN300 TBW300, HY300, LX300, F300, M300
Prepared For:	SHENZHEN TOPWAY TECHNOLOGY CO., LTD.
Address:	The west side 5F, No.4 building, Pengtengda industrial park, Dalang street, Longhua District, Shenzhen, Guangdong provice, China
Manufacturer:	SHENZHEN TOPWAY TECHNOLOGY CO., LTD.
Address:	The west side 5F, No.4 building, Pengtengda industrial park, Dalang street, Longhua District, Shenzhen, Guangdong provice, China
Prepared By:	Shenzhen BCTC Testing Co., Ltd.
Address:	1-2F, East of B Building, Pengzhou Industrial, Fuyuan 1st Road, Qiaotou Community, Fuyong Street, Bao'an District, Shenzhen, China
Sample Received Date:	Nov. 09, 2020
Sample tested Date:	Nov. 09, 2020 to Nov. 18, 2020
Issue Date:	Nov. 19, 2020
Report No.:	BCTC2011000670E
Test Standards	FCC Part15.247 ANSI C63.10:2013 KDB 662911 D01 v02r01 558074 D01 15.247 Meas Guidance v05r02
Test Results	PASS

Tested by:

Eric Yang/Project Handler

Approved by:

Zero Zhou/Reviewer

The test report is effective only with both signature and specialized stamp.This result(s) shown in this report refer only to the sample(s) tested. Without written approval of Shenzhen BCTC Testing Co., Ltd, this report can't be reproduced except in full.The tested sample(s) and the sample information are provided by the client.

Table of Contents

Page

1 .VERSION 6
2 . SUMMARY OF TEST RESULTS 7
2.1 MEASUREMENT UNCERTAINTY 8
3 . GENERAL INFORMATION 9
3.1 GENERAL DESCRIPTION OF EUT 9
3.2 DESCRIPTION OF TEST MODES 10
3.3 BLOCK DIGRAM SHOWING THE CONFIGURATION OF SYSTEM TESTED 10
3.4 DESCRIPTION OF SUPPORT UNITS(CONDUCTED MODE) 10
3.5 EQUIPMENTS LIST FOR ALL TEST ITEMS 12
3.5.1TEST FACILITY 12
4 . EMC EMISSION TEST 14
4.1 CONDUCTED EMISSION MEASUREMENT 14
4.1.1 POWER LINE CONDUCTED EMISSION LIMITS 14
4.1.2 TEST PROCEDURE 14
4.1.3 DEVIATION FROM TEST STANDARD 14
4.1.4 TEST SETUP 15
4.1.5 EUT OPERATING CONDITIONS 15
4.1.6 TEST RESULTS 16
4.2 RADIATED EMISSION MEASUREMENT 18
4.2.1 RADIATED EMISSION LIMITS 18
4.2.2 TEST PROCEDURE 19
4.2.3 DEVIATION FROM TEST STANDARD 19
4.2.4 TEST SETUP 19
4.2.5 EUT OPERATING CONDITIONS 20
4.2.6 TEST RESULTS (BETWEEN 9KHZ – 30 MHZ) 21
4.2.7 TEST RESULTS (BETWEEN 30MHZ – 1GHZ) 22
4.2.8 TEST RESULTS 24
4.3 RADIATED BAND EMISSION MEASUREMENT 28
4.3.1 TEST REQUIREMENT: 28
4.3.2 TEST PROCEDURE 28
4.3.3 DEVIATION FROM TEST STANDARD 29
4.3.4 TEST SETUP 29
4.3.5 EUT OPERATING CONDITIONS 29

Table of Contents

Page

5 . POWER SPECTRAL DENSITY TEST 32
5.1 APPLIED PROCEDURES / LIMIT 32
5.1.1 TEST PROCEDURE 32
5.1.2 DEVIATION FROM STANDARD 32
5.1.3 TEST SETUP 32
5.1.4 EUT OPERATION CONDITIONS 32
5.1.5 TEST RESULTS 32
6 . BANDWIDTH TEST 41
6.1 APPLIED PROCEDURES / LIMIT 41
6.1.1 TEST PROCEDURE 41
6.1.2 DEVIATION FROM STANDARD 41
6.1.3 TEST SETUP 41
6.1.4 EUT OPERATION CONDITIONS 41
6.1.5 TEST RESULTS 42
7 . PEAK OUTPUT POWER TEST 50
7.1 APPLIED PROCEDURES/LIMIT 50
7.1.1 TEST PROCEDURE 50
7.1.2 DEVIATION FROM STANDARD 50
7.1.3 TEST SETUP 50
7.1.4 EUT OPERATION CONDITIONS 50
7.1.5 TEST RESULTS 51
8 . 100 KHZ BANDWIDTH OF FREQUENCY BAND EDGE 52
8.1 APPLICABLE STANDARD 52
8.2 TEST PROCEDURE 52
8.3 DEVIATION FROM STANDARD 52
8.4 TEST SETUP 52
8.5 EUT OPERATION CONDITIONS 52
9 . DUTY CYCLE OF TEST SIGNAL 61
9.1 STANDARD REQUIREMENT 61
9.2 FORMULA: 61
10 . ANTENNA REQUIREMENT 64
10.1 STANDARD REQUIREMENT 64
10.2 EUT ANTENNA 64

Table of Contents

Page

11 . EUT TEST PHOTO **65**

12 . EUT PHOTO **67**

APPENDIX-PHOTOGRAPHS OF EUT CONSTRUCTIONAL DETAILS

1.VERSION

Report No.	Issue Date	Description	Approved
BCTC2011000670E	Nov. 19, 2020	Original	Valid

2. SUMMARY OF TEST RESULTS

Test procedures according to the technical standards:

FCC Part15 (15.247) , Subpart C			
Standard Section	Test Item	Judgment	Remark
15.207	Conducted Emission	PASS	
15.247 (a)(2)	6dB Bandwidth	PASS	
15.247 (b)	Peak Output Power	PASS	
15.247 (d)	Radiated Spurious Emission	PASS	
15.247 (e)	Power Spectral Density	PASS	
15.205	Restricted Band of Operation	PASS	
15.247 (d)	Band Edge (Out of Band Emissions)	PASS	
15.203	Antenna Requirement	PASS	

NOTE:

(1)" N/A" denotes test is not applicable in this Test Report

2.1 MEASUREMENT UNCERTAINTY

The reported uncertainty of measurement **y** ± **U** , where expended uncertainty **U** is based on a standard uncertainty multiplied by a coverage factor of **k=2** , providing a level of confidence of approximately **95** %。

No.	Item	Uncertainty
1	3m camber Radiated spurious emission(30MHz-1GHz)	U=4.3dB
2	3m chamber Radiated spurious emission(1GHz-18GHz)	U=4.5dB
3	3m chamber Radiated spurious emission(18GHz-40GHz)	U=3.34dB
4	Conducted Adjacent channel power	U=1.38dB
5	Conducted output power uncertainty Above 1G	U=1.576dB
6	Conducted output power uncertainty below 1G	U=1.28dB
7	humidity uncertainty	U=5.3%
8	Temperature uncertainty	U=0.59℃

3. GENERAL INFORMATION

3.1 GENERAL DESCRIPTION OF EUT

Model/Type Ref.:	KN300 TBW300, HY300, LX300, F300, M300
Model differences:	All the model are the same circuit and RF module, except model names.
Hardware Version:	N/A
Software Version:	N/A
Operation Frequency:	802.11b/g/n20MHz:2412~2462 MHz 802.11n40MHz:2422~2452 MHz
Bit Rate of Transmitter	802.11b:11/5.5/2/1 Mbps 802.11g:54/48/36/24/18/12/9/6Mbps 802.11n Up to 300Mbps
Number Of Channel	802.11b/g/n20MHz:11 CH 802.11n40MHz: 7 CH
Type of Modulation:	WIFI: OFDM/DSSS
Antenna installation:	WIFI: External antenna
Antenna Gain:	WIFI: Antenna A:2dBi Antenna B: 2dBi
Ratings:	AC120V/60Hz

1.

Channel List for 802.11b/g/n(20)							
Channel	Frequency (MHz)	Channel	Frequency (MHz)	Channel	Frequency (MHz)	Channel	Frequency (MHz)
01	2412	04	2427	07	2442	10	2457
02	2417	05	2432	08	2447	11	2462
03	2422	06	2437	09	2452		

Channel List for 802.11n(40)							
Channel	Frequency (MHz)	Channel	Frequency (MHz)	Channel	Frequency (MHz)	Channel	Frequency (MHz)
03	2422	05	2432	07	2442	09	2452
04	2427	06	2437	08	2447		

2

Table for Internal antenna

Ant.	Brand	Model Name	Antenna Type	Gain (dBi)	NOTE
A	N/A	N/A	External antenna	2	
B	N/A	N/A	External antenna	2	

EUT has two External antennas with Max gain GANT 2dBi on every antenna, CDD device with two spatial streams, also can operat with one spatial streams according to KDB662911 D01 v02r01, Directional gain= GANT + Array Gain, where Array Gain is as follows.

1) For power spectral density(PSD) measurements,
Array Gain=10log(NANT/NSS)dB=10log(2/1)=3.01dB,
So the directional gain for PSD is 5.01dBi

2) For power measurements,
The Array gain=0 dB for NANT≤4,
So the directional gain for Power measurements is 2dBi

3.2 DESCRIPTION OF TEST MODES

Pretest Mode	Description
Mode 1	802.11b CH1/ CH6/ CH11
Mode 2	802.11g CH1/ CH6/ CH11
Mode 3	802.11n20 CH1/ CH6/ CH11
Mode 4	802.11n40 CH3/ CH6/ CH9
Mode 5	Link Mode

Conducted Emission	
Final Test Mode	Description
Mode 5	Link Mode

For Radiated Emission	
Final Test Mode	Description
Mode 1	802.11b CH1/ CH6/ CH11
Mode 2	802.11g CH1/ CH6/ CH11
Mode 3	802.11n20 CH1/ CH6/ CH11
Mode 4	802.11n40 CH3/ CH6/ CH9

Note:

(1) The measurements are performed at all Bit Rate of Transmitter, the worst data was reported.

3.3 BLOCK DIGRAM SHOWING THE CONFIGURATION OF SYSTEM TESTED

Conducted Emission Test /Radiated Spurious Emission

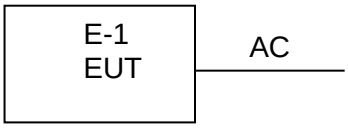

3.4 DESCRIPTION OF SUPPORT UNITS(CONDUCTED MODE)

The EUT has been tested as an independent unit together with other necessary accessories or support units. The following support units or accessories were used to form a representative test configuration during the tests.

No.	Device Type	Brand	Model	Series No.	Note
E-1	Wi-Fi Repeater and Extender	N/A	KN300	N/A	EUT

Item	Shielded Type	Ferrite Core	Length	Note

Note:

(1) The support equipment was authorized by Declaration of Confirmation.

(2) For detachable type I/O cable should be specified the length in cm in『Length』column.

3.5 EQUIPMENTS LIST FOR ALL TEST ITEMS

3.5.1TEST FACILITY

All measurement facilities used to collect the measurement data are located at Shenzhen BCTC Testing Co., Ltd. Address: 1-2F, East of B Building, Pengzhou Industrial, Fuyuan 1st Road, Qiaotou Community, Fuyong Street, Bao'an District, Shenzhen, China. The site and apparatus are constructed in conformance with the requirements of ANSI C63.4 and CISPR 16-1-1 other equivalent standards.

FCC Test Firm Registration Number: 712850

IC Registered No.: 23583

Radiation Test equipment

Item	Equipment	Manufacturer	Type No.	Serial No.	Last calibration	Calibrated until
1	Spectrum Analyzer (9kHz-26.5GHz)	Agilent	E4407B	MY45109572	Jun. 08, 2020	Jun. 07, 2021
2	Test Receiver (9kHz-7GHz)	R&S	ESR7	101154	Jun. 08, 2020	Jun. 07, 2021
3	Bilog Antenna (30MHz-3GHz)	SCHWARZBECK	VULB9163	VULB9163-942	Jun. 08, 2020	Jun. 07, 2021
4	Horn Antenna (1GHz-18GHz)	SCHWARZBECK	BBHA9120D	1541	Jun. 10, 2020	Jun. 09, 2021
5	Horn Antenna (18GHz-40GHz)	SCHWARZBECK	BBHA9170	00822	Jun. 10, 2020	Jun. 09, 2021
6	Amplifier (9KHz-6GHz)	SCHWARZBECK	BBV9744	9744-0037	Jun. 04, 2020	Jun. 03, 2021
7	Amplifier (0.5GHz-18GHz)	SCHWARZBECK	BBV9718	9718-309	Jun. 04, 2020	Jun. 03, 2021
8	Amplifier (18GHz-40GHz)	MITEQ	TTA1840-35-HG	2034381	Jun. 08, 2020	Jun. 07, 2021
9	Loop Antenna (9KHz-30MHz)	SCHWARZBECK	FMZB1519B	00014	Jun. 08, 2020	Jun. 07, 2021
10	RF cables1 (9kHz-30MHz)	Huber+Suhnar	9kHz-30MHz	B1702988-0008	Jun. 08, 2020	Jun. 07, 2021
11	RF cables2 (30MHz-1GHz)	Huber+Suhnar	30MHz-1GHz	1486150	Jun. 08, 2020	Jun. 07, 2021
12	RF cables3 (1GHz-40GHz)	Huber+Suhnar	1GHz-40GHz	1607106	Jun. 08, 2020	Jun. 07, 2021
13	Power Metter	Keysight	E4419B	\	Jun. 08, 2020	Jun. 07, 2021
14	Power Sensor (AV)	Keysight	E9 300A	\	Jun. 08, 2020	Jun. 07, 2021
15	Signal Analyzer 20kHz-26.5GHz	KEYSIGHT	N9020A	MY49100060	Jun. 04, 2020	Jun. 03, 2021
16	Spectrum Analyzer 9kHz-40GHz	Agilent	FSP40	100363	Jun. 13, 2020	Jun. 12, 2021
17	D.C. Power Supply	LongWei	TPR-6405D	\	\	\
18	Software	Frad	EZ-EMC	FA-03A2 RE	\	\

Conduction Test equipment

Item	Equipment	Manufacturer	Type No.	Serial No.	Last calibration	Calibrated until
1	Test Receiver	R&S	ESR3	102075	Jun. 08, 2020	Jun. 07, 2021
2	LISN	SCHWARZBECK	NSLK8127	8127739	Jun. 13, 2020	Jun. 12, 2021
3	LISN	R&S	ENV216	101375	Jun. 04, 2020	Jun. 03, 2021
4	RF cables	Huber+Suhnar	9kHz-30MHz	B1702988-0008	Jun. 08, 2020	Jun. 07, 2021
5	Software	Frad	EZ-EMC	EMC-CON 3A1	\	\

4. EMC EMISSION TEST

4.1 CONDUCTED EMISSION MEASUREMENT

4.1.1 POWER LINE CONDUCTED EMISSION Limits (Frequency Range 150KHz-30MHz)

FREQUENCY (MHz)	Limit (dBuV)		Standard
	Quasi-peak	Average	
0.15 -0.5	66 - 56 *	56 - 46 *	FCC
0.50 -5.0	56.00	46.00	FCC
5.0 -30.0	60.00	50.00	FCC

Note:

(1) The tighter limit applies at the band edges.

(2) The limit of " * " marked band means the limitation decreases linearly with the logarithm of the frequency in the range.

The following table is the setting of the receiver

Receiver Parameters	Setting
Attenuation	10 dB
Start Frequency	0.15 MHz
Stop Frequency	30 MHz
IF Bandwidth	9 kHz

4.1.2 TEST PROCEDURE

a. The EUT was placed 0.8 meters from the horizontal ground plane with EUT being connected to the power mains through a line impedance stabilization network (LISN). All other support equipments powered from additional LISN(s). The LISN provide 50 Ohm/ 50uH of coupling impedance for the measuring instrument.

b. Interconnecting cables that hang closer than 40 cm to the ground plane shall be folded back and forth in the center forming a bundle 30 to 40 cm long.

c. I/O cables that are not connected to a peripheral shall be bundled in the center. The end of the cable may be terminated, if required, using the correct terminating impedance. The overall length shall not exceed 1 m.

d. LISN at least 80 cm from nearest part of EUT chassis.

e. For the actual test configuration, please refer to the related Item –EUT Test Photos.

4.1.3 DEVIATION FROM TEST STANDARD

No deviation

4.1.4 TEST SETUP

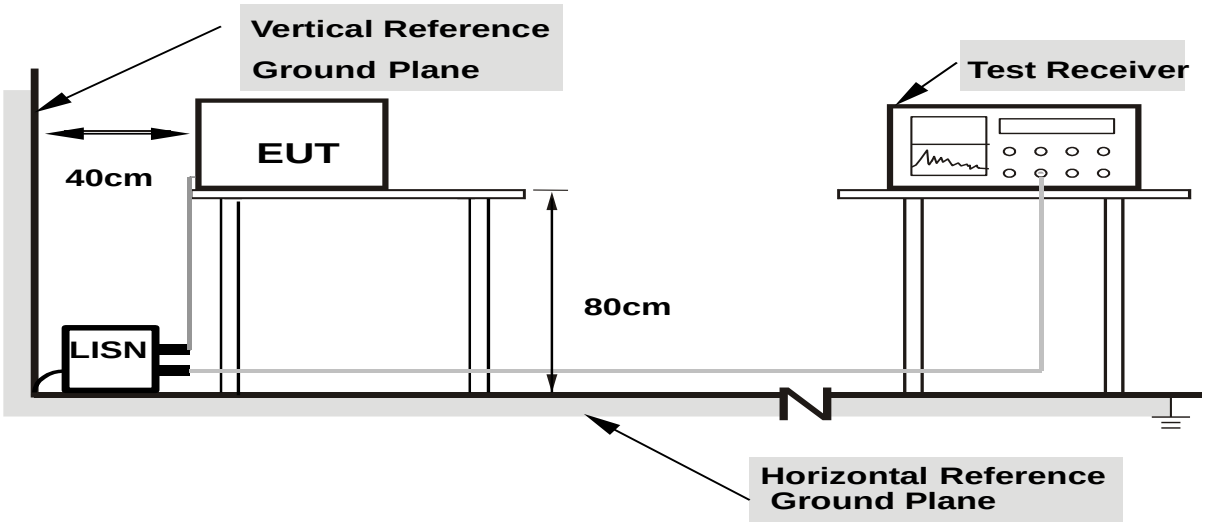

Note: 1.Support units were connected to second LISN.
2.Both of LISNs (AMN) are 80 cm from EUT and at least 80 from other units and other metal planes

4.1.5 EUT OPERATING CONDITIONS

The EUT was configured for testing in a typical fashion (as a customer would normally use it). The EUT has been programmed to continuously transmit during test. This operating condition was tested and used to collect the included data.

We pretest AC 120V and AC 240V, the worst voltage was AC 120V and the data recording in the report.

4.1.6 TEST RESULTS

Temperature :	26 ℃	Relative Humidity :	54%
Pressure :	101kPa	Phase :	L
Test Voltage :	AC 120V/60Hz	Test Mode :	Mode 5

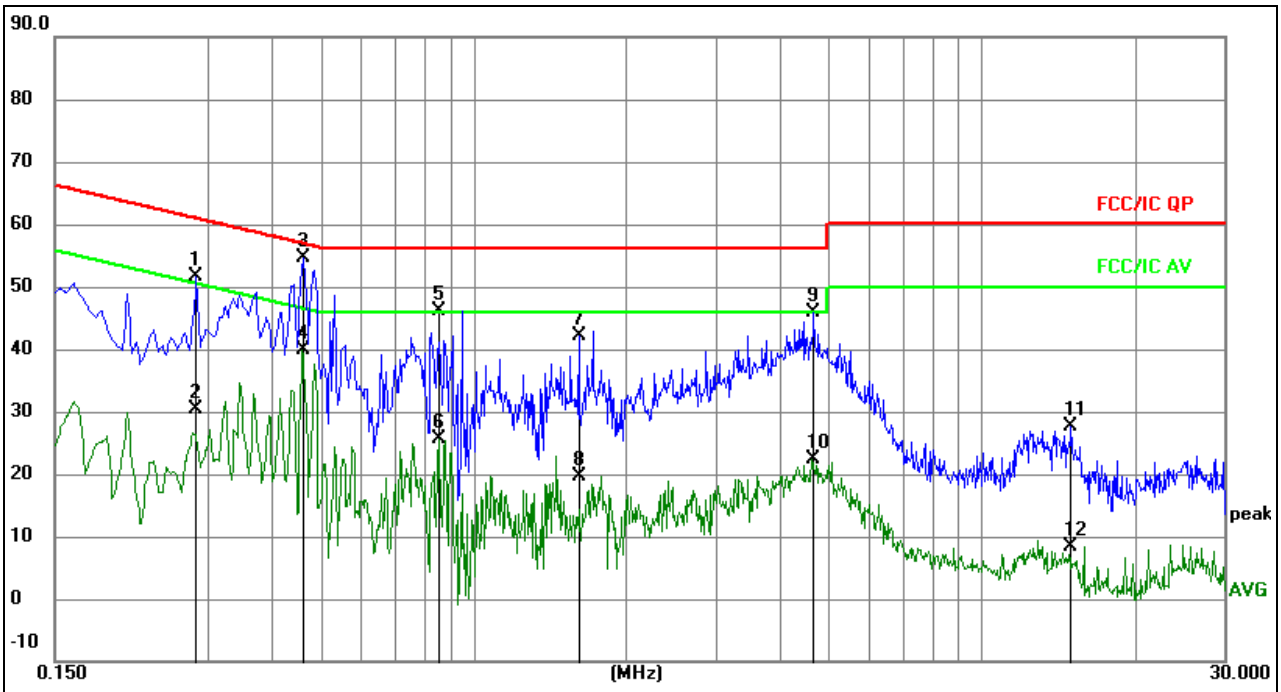

Remark:
1. All readings are Quasi-Peak and Average values.
2. Factor = Insertion Loss + Cable Loss.

No.	Mk.	Freq.	Reading Level	Correct Factor	Measure-ment	Limit	Over	
		MHz		dB	dBuV	dBuV	dB	Detector
1		0.2847	41.97	9.56	51.53	60.68	-9.15	QP
2		0.2847	20.72	9.56	30.28	50.68	-20.40	AVG
3	*	0.4588	45.02	9.55	54.57	56.71	-2.14	QP
4		0.4588	30.34	9.55	39.89	46.71	-6.82	AVG
5		0.8528	36.41	9.61	46.02	56.00	-9.98	QP
6		0.8528	16.02	9.61	25.63	46.00	-20.37	AVG
7		1.6105	32.66	9.58	42.24	56.00	-13.76	QP
8		1.6105	10.14	9.58	19.72	46.00	-26.28	AVG
9		4.6223	36.14	9.77	45.91	56.00	-10.09	QP
10		4.6223	12.65	9.77	22.42	46.00	-23.58	AVG
11		14.9860	17.97	9.70	27.67	60.00	-32.33	QP
12		14.9860	-1.40	9.70	8.30	50.00	-41.70	AVG

Temperature :	26 ℃	Relative Humidity :	54%
Pressure :	101kPa	Phase :	N
Test Voltage :	AC 120V/60Hz	Test Mode :	Mode 5

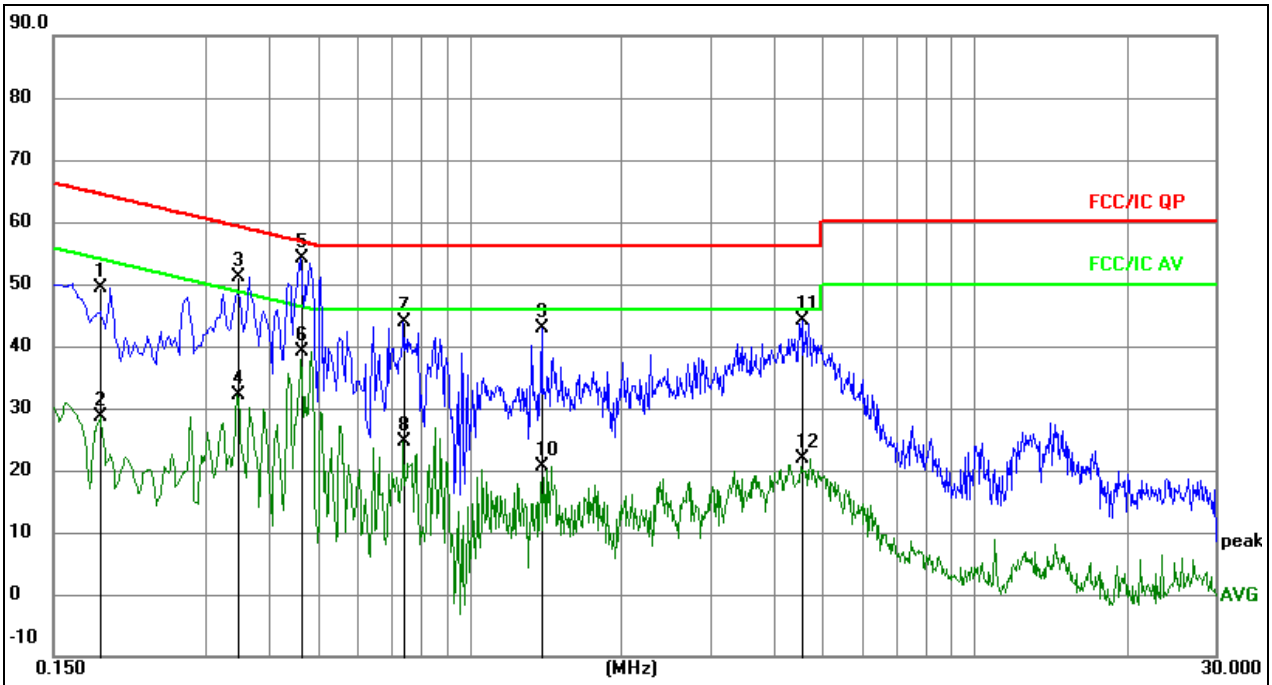

Remark:
1. All readings are Quasi-Peak and Average values.
2. Factor = Insertion Loss + Cable Loss.

No.	Mk.	Freq.	Reading Level	Correct Factor	Measure-ment	Limit	Over	
		MHz		dB	dBuV	dBuV	dB	Detector
1		0.1860	39.80	9.48	49.28	64.21	-14.93	QP
2		0.1860	19.05	9.48	28.53	54.21	-25.68	AVG
3		0.3480	41.70	9.54	51.24	59.01	-7.77	QP
4		0.3480	22.62	9.54	32.16	49.01	-16.85	AVG
5	*	0.4650	44.68	9.56	54.24	56.60	-2.36	QP
6		0.4650	29.57	9.56	39.13	46.60	-7.47	AVG
7		0.7395	34.34	9.64	43.98	56.00	-12.02	QP
8		0.7395	15.08	9.64	24.72	46.00	-21.28	AVG
9		1.3920	33.36	9.58	42.94	56.00	-13.06	QP
10		1.3920	10.95	9.58	20.53	46.00	-25.47	AVG
11		4.5690	34.42	9.77	44.19	56.00	-11.81	QP
12		4.5690	12.21	9.77	21.98	46.00	-24.02	AVG

4.2 RADIATED EMISSION MEASUREMENT

4.2.1 RADIATED EMISSION LIMITS (Frequency Range 9kHz-1000MHz)

20dBc in any 100 kHz bandwidth outside the operating frequency band. In case the emission fall within the restricted band specified on 15.205(a), then the 15.209(a) limit in the table below has to be followed.

Frequencies (MHz)	Field Strength (micorvolts/meter)	Measurement Distance (meters)
0.009~0.490	2400/F(KHz)	300
0.490~1.705	24000/F(KHz)	30
1.705~30.0	30	30
30~88	100	3
88~216	150	3
216~960	200	3
Above 960	500	3

LIMITS OF RADIATED EMISSION MEASUREMENT (Above 1000MHz)

FREQUENCY (MHz)	Limit (dBuV/m) (at 3M)	
	PEAK	AVERAGE
Above 1000	74	54

Notes:

(1) The limit for radiated test was performed according to FCC PART 15C.

(2) The tighter limit applies at the band edges.

(3) Emission level (dBuV/m)=20log Emission level (uV/m).

Spectrum Parameter	Setting
Attenuation	Auto
Start Frequency	1000 MHz
Stop Frequency	25GHz
RB / VB (emission in restricted band)	1 MHz / 1 MHz for Peak, 1 MHz / *10Hz* for Average

Receiver Parameter	Setting
Attenuation	Auto
Start ~ Stop Frequency	9kHz~150kHz / RB 200Hz for QP
Start ~ Stop Frequency	150kHz~30MHz / RB 9kHz for QP
Start ~ Stop Frequency	30MHz~1000MHz / RB 120kHz for QP

4.2.2 TEST PROCEDURE

Below 1GHz test procedure as below:

a. The EUT was placed on the top of a rotating table 0.8 meters above the ground at a 3 meter semi-anechoic camber. The table was rotated 360 degrees to determine the position of the highest radiation.
b. The EUT was set 3 meters away from the interference-receiving antenna, which was mounted on the top of a variable-height antenna tower.
c. The antenna height is varied from one meter to four meters above the ground to determine the maximum value of the field strength. Both horizontal and vertical polarizations of the antenna are set to make the measurement.
d. For each suspected emission, the EUT was arranged to its worst case and then the antenna was tuned to heights from 1 meter to 4 meters (for the test frequency of below 30MHz, the antenna was tuned to heights 1 meter) and the rotatable table was turned from 0 degrees to 360 degrees to find the maximum reading.
e. The test-receiver system was set to Peak Detect Function and Specified Bandwidth with Maximum Hold Mode.
f. If the emission level of the EUT in peak mode was 10dB lower than the limit specified, then testing could be stopped and the peak values of the EUT would be reported. Otherwise the emissions that did not have 10dB margin would be re-tested one by one using peak, quasi-peak or average method as specified and then reported in a data sheet.

Above 1GHz test procedure as below:

g. Different between above is the test site, change from Semi- Anechoic Chamber to fully Anechoic Chamber and change form table 0.8 metre to 1.5 metre(Above 18GHz the distance is 1 meter and table is 1.5 metre).
h. Test the EUT in the lowest channel ,the middle channel ,the Highest channel

Note:

Both horizontal and vertical antenna polarities were tested
and performed pretest to three orthogonal axis. The worst case emissions were reported

4.2.3 DEVIATION FROM TEST STANDARD

No deviation

4.2.4 TEST SETUP

（A）Radiated Emission Test-Up Frequency Below 30MHz

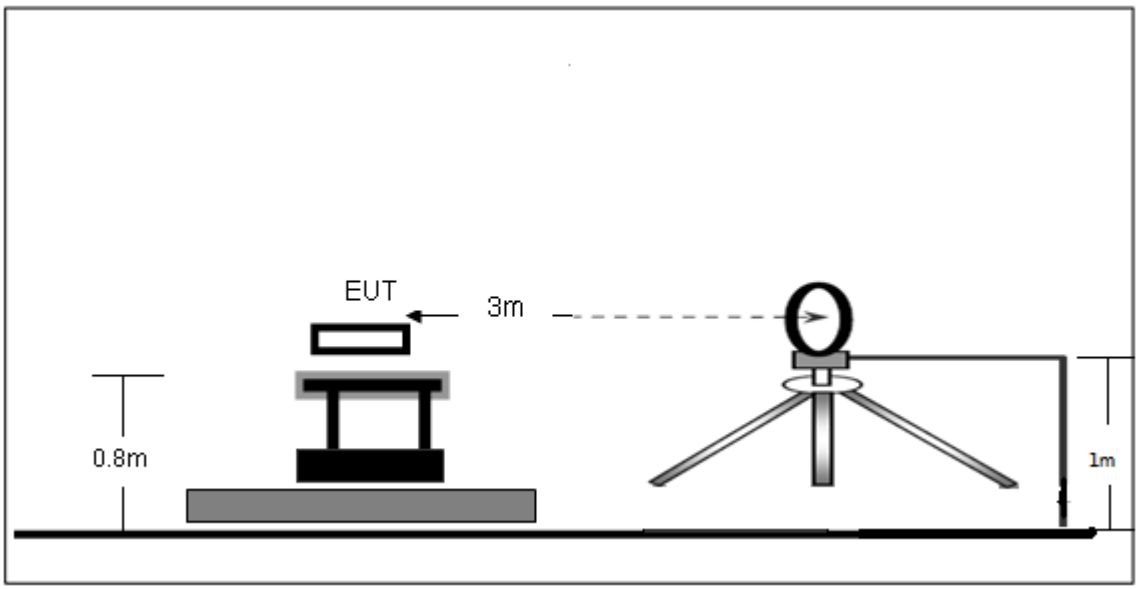

（B）Radiated Emission Test-Up Frequency 30MHz~1GHz

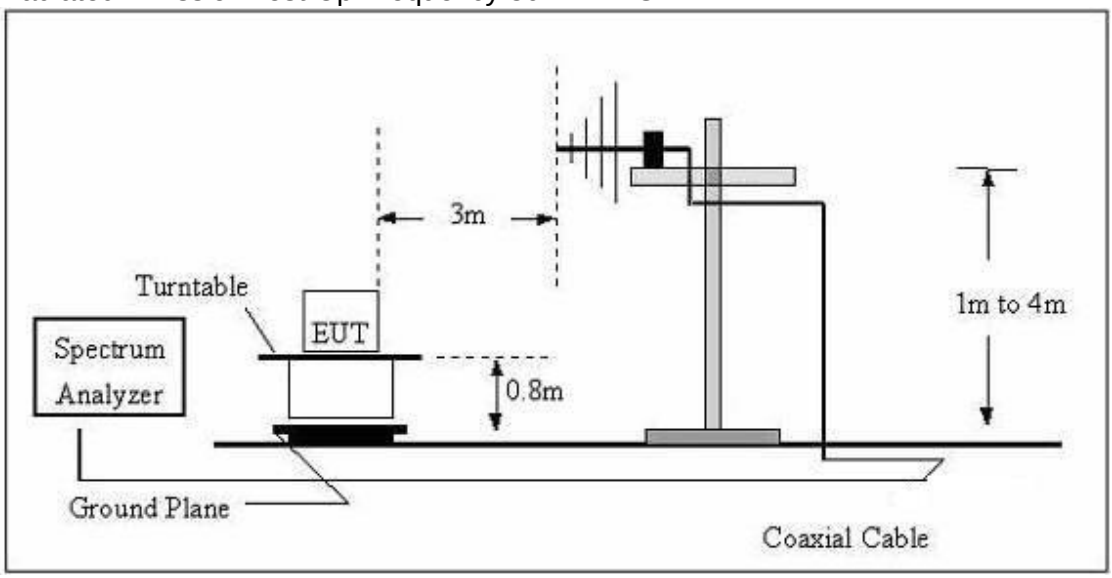

（C）Radiated Emission Test-Up Frequency Above 1GHz

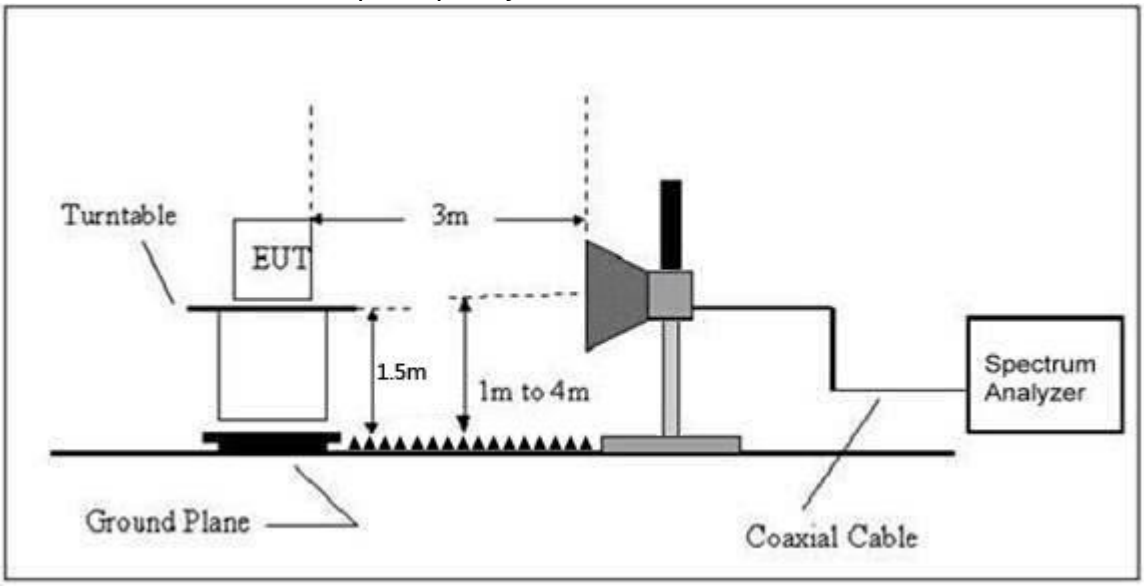

4.2.5 EUT OPERATING CONDITIONS

The EUT tested system was configured as the statements of 2.4 Unless otherwise a special operating condition is specified in the follows during the testing.

4.2.6 TEST RESULTS (BETWEEN 9KHZ – 30 MHZ)

Temperature:	26 ℃	Relative Humidity :	54%
Pressure:	101kPa	Test Voltage :	AC 120V/60Hz
Test Mode :	Mode 5	Polarization :	--

Freq.	Reading	Limit	Margin	State
(MHz)	(dBuV/m)	(dBuV/m)	(dB)	P/F
--	--	--	--	PASS
--	--	--	--	PASS

NOTE:

The amplitude of spurious emissions which are attenuated by more than 20dB below the permissible value has no need to be reported.
Distance extrapolation factor =40 log (specific distance/test distance)(dB);
Limit line = specific limits(dBuv) + distance extrapolation factor.

4.2.7 TEST RESULTS (BETWEEN 30MHZ – 1GHZ)

Temperature :	26 ℃	Relative Humidity :	54%
Pressure :	101 kPa	Polarization :	Horizontal
Test Voltage :	AC 120V/60Hz	Test Mode :	Mode 5

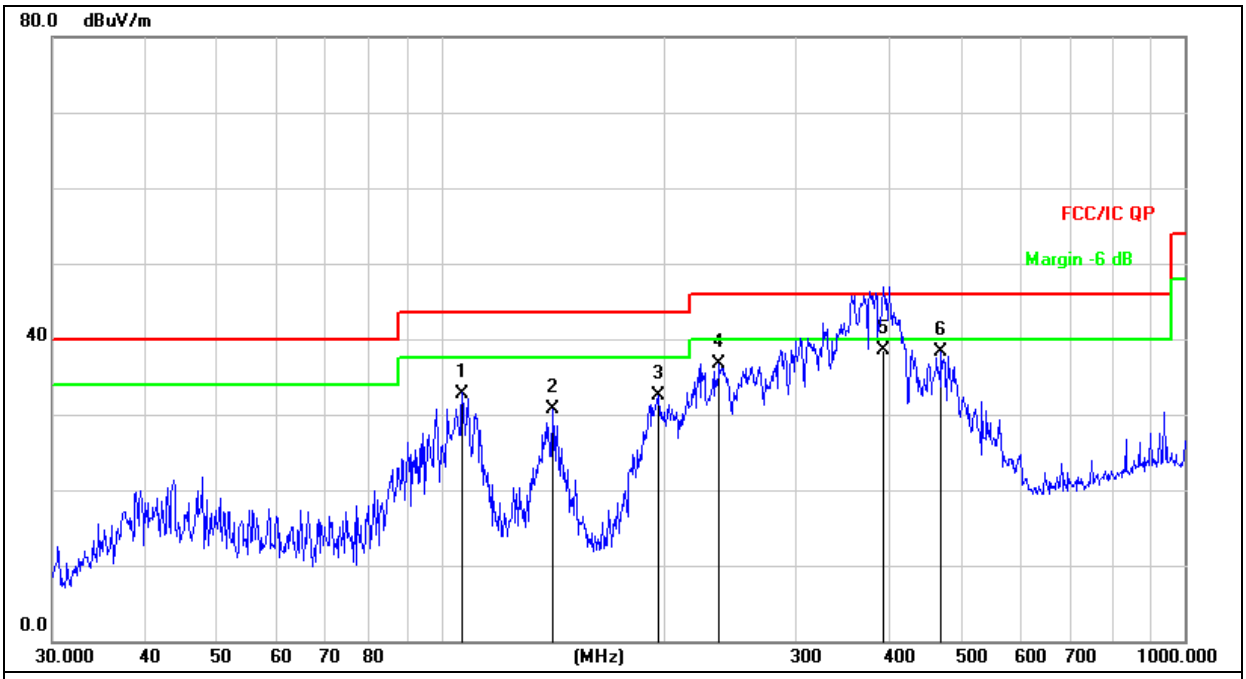

Remark:
Factor = Antenna Factor + Cable Loss – Pre-amplifier.

No.	Mk.	Freq.	Reading Level	Correct Factor	Measure-ment	Limit	Over	
		MHz	dBuV	dB	dBuV/m	dB/m	dB	Detector
1		106.7587	48.71	-15.91	32.80	43.50	-10.70	QP
2		141.3298	48.85	-18.15	30.70	43.50	-12.80	QP
3		195.8220	48.03	-15.55	32.48	43.50	-11.02	QP
4		236.6447	51.29	-14.51	36.78	46.00	-9.22	QP
5	*	393.5723	48.37	-9.86	38.51	46.00	-7.49	QP
6		470.5231	46.56	-8.19	38.37	46.00	-7.63	QP

Temperature :	26 ℃	Relative Humidity :	54%
Pressure :	101kPa	Polarization :	Vertical
Test Voltage :	AC 120V/60Hz	Test Mode :	Mode 5

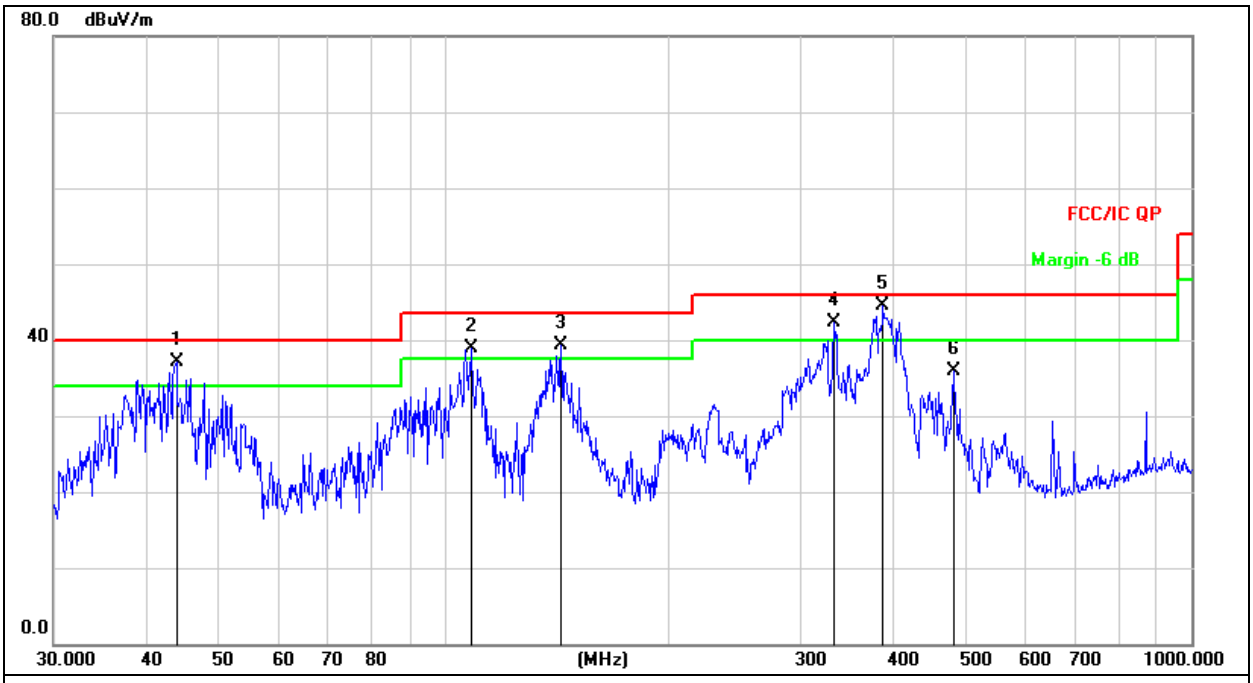

Remark:
Factor = Antenna Factor + Cable Loss – Pre-amplifier.

No.	Mk.	Freq.	Reading Level	Correct Factor	Measure-ment	Limit	Over	
		MHz	dBuV	dB	dBuV/m	dB/m	dB	Detector
1	!	43.8119	51.64	-14.61	37.03	40.00	-2.97	QP
2	!	108.6470	54.96	-16.03	38.93	43.50	-4.57	QP
3	!	143.3261	57.61	-18.28	39.33	43.50	-4.17	QP
4	!	332.5187	53.94	-11.54	42.40	46.00	-3.60	QP
5	*	386.6338	54.53	-10.05	44.48	46.00	-1.52	QP
6		480.5276	43.94	-7.98	35.96	46.00	-10.04	QP

4.2.8 TEST RESULTS

Between 1GHz – 25GHz

802.11b

Polar (H/V)	Frequency (MHz)	Reading Level (dBuV/m)	Correct Factor (dB)	Measure-ment (dBuV/m)	Limits (dBuV/m)	Over (dB)	Detector Type
Low channel:2412MHz							
V	4824.00	52.51	-0.43	52.08	74.00	-21.92	PK
V	4824.00	41.62	-0.43	41.19	54.00	-12.81	AV
V	7236.00	44.55	8.31	52.86	74.00	-21.14	PK
V	7236.00	35.00	8.31	43.31	54.00	-10.69	AV
H	4804.00	51.03	-0.43	50.60	74.00	-23.40	PK
H	4804.00	41.09	-0.43	40.66	54.00	-13.34	AV
H	7236.00	41.70	8.31	50.01	74.00	-23.99	PK
H	7236.00	33.71	8.31	42.02	54.00	-11.98	AV
Middle channel:2437MHz							
V	4874.00	48.91	-0.38	48.53	74.00	-25.47	PK
V	4874.00	42.19	-0.38	41.81	54.00	-12.19	AV
V	7311.00	41.84	8.83	50.67	74.00	-23.33	PK
V	7311.00	33.34	8.83	42.17	54.00	-11.83	AV
H	4874.00	44.97	-0.38	44.59	74.00	-29.41	PK
H	4874.00	35.64	-0.38	35.26	54.00	-18.74	AV
H	7311.00	39.59	8.83	48.42	74.00	-25.58	PK
H	7311.00	31.17	8.83	40.00	54.00	-14.00	AV
High channel:2462MHz							
V	4924.00	50.52	-0.32	50.20	74.00	-23.80	PK
V	4924.00	40.53	-0.32	40.21	54.00	-13.79	AV
V	7386.00	41.93	9.35	51.28	74.00	-22.72	PK
V	7386.00	31.55	9.35	40.90	54.00	-13.10	AV
H	4924.00	48.88	-0.32	48.56	74.00	-25.44	PK
H	4924.00	39.40	-0.32	39.08	54.00	-14.92	AV
H	7386.00	40.79	9.35	50.14	74.00	-23.86	PK
H	7386.00	33.14	9.35	42.49	54.00	-11.51	AV

Remark:

1.Emission Level = Meter Reading + Factor,

Factor = Antenna Factor + Cable Loss – Pre-amplifier.

Over= Emission Level - Limit

2.If peak below the average limit, the average emission was no test.

3. In restricted bands of operation, The spurious emissions below the permissible value more than 20dB

4. The amplitude of spurious emissions which are attenuated by more than 20dB below the permissible value has no need to be reported.

5. The worst case is Antenna A..

802.11g

Polar (H/V)	Frequency (MHz)	Reading Level (dBuV/m)	Correct Factor (dB)	Measure-ment (dBuV/m)	Limits (dBuV/m)	Over (dB)	Detector Type
Low channel:2412MHz							
V	4824.00	52.40	-0.43	51.97	74.00	-22.03	PK
V	4824.00	42.97	-0.43	42.54	54.00	-11.46	AV
V	7236.00	42.87	8.31	51.18	74.00	-22.82	PK
V	7236.00	33.23	8.31	41.54	54.00	-12.46	AV
H	4804.00	48.35	-0.43	47.92	74.00	-26.08	PK
H	4804.00	37.74	-0.43	37.31	54.00	-16.69	AV
H	7236.00	40.09	8.31	48.40	74.00	-25.60	PK
H	7236.00	31.58	8.31	39.89	54.00	-14.11	AV
Middle channel:2437MHz							
V	4874.00	50.86	-0.38	50.48	74.00	-23.52	PK
V	4874.00	42.50	-0.38	42.12	54.00	-11.88	AV
V	7311.00	40.16	8.83	48.99	74.00	-25.01	PK
V	7311.00	30.31	8.83	39.14	54.00	-14.86	AV
H	4874.00	47.67	-0.38	47.29	74.00	-26.71	PK
H	4874.00	38.12	-0.38	37.74	54.00	-16.26	AV
H	7311.00	38.56	8.83	47.39	74.00	-26.61	PK
H	7311.00	30.06	8.83	38.89	54.00	-15.11	AV
High channel:2462MHz							
V	4924.00	52.18	-0.32	51.86	74.00	-22.14	PK
V	4924.00	44.03	-0.32	43.71	54.00	-10.29	AV
V	7386.00	43.77	9.35	53.12	74.00	-20.88	PK
V	7386.00	33.76	9.35	43.11	54.00	-10.89	AV
H	4924.00	49.21	-0.32	48.89	74.00	-25.11	PK
H	4924.00	39.62	-0.32	39.30	54.00	-14.70	AV
H	7386.00	41.62	9.35	50.97	74.00	-23.03	PK
H	7386.00	33.48	9.35	42.83	54.00	-11.17	AV

Remark:

1.Emission Level = Meter Reading + Factor,

Factor = Antenna Factor + Cable Loss – Pre-amplifier.

Over= Emission Level - Limit

2.If peak below the average limit, the average emission was no test.

3. In restricted bands of operation, The spurious emissions below the permissible value more than 20dB

4. The amplitude of spurious emissions which are attenuated by more than 20dB below the permissible value has no need to be reported.

5. The worst case is Antenna A.

802.11n20

Polar (H/V)	Frequency (MHz)	Reading Level (dBuV/m)	Correct Factor (dB)	Measure-ment (dBuV/m)	Limits (dBuV/m)	Over (dB)	Detector Type
Low channel:2412MHz							
V	4824.00	54.60	-0.43	54.17	74.00	-19.83	PK
V	4824.00	45.78	-0.43	45.35	54.00	-8.65	AV
V	7236.00	45.75	8.31	54.06	74.00	-19.94	PK
V	7236.00	35.06	8.31	43.37	54.00	-10.63	AV
H	4804.00	51.54	-0.43	51.11	74.00	-22.89	PK
H	4804.00	42.25	-0.43	41.82	54.00	-12.18	AV
H	7236.00	43.99	8.31	52.30	74.00	-21.70	PK
H	7236.00	36.11	8.31	44.42	54.00	-9.58	AV
Middle channel:2437MHz							
V	4874.00	50.78	-0.38	50.40	74.00	-23.60	PK
V	4874.00	42.40	-0.38	42.02	54.00	-11.98	AV
V	7311.00	40.65	8.83	49.48	74.00	-24.52	PK
V	7311.00	32.59	8.83	41.42	54.00	-12.58	AV
H	4874.00	47.14	-0.38	46.76	74.00	-27.24	PK
H	4874.00	37.28	-0.38	36.90	54.00	-17.10	AV
H	7311.00	38.50	8.83	47.33	74.00	-26.67	PK
H	7311.00	30.38	8.83	39.21	54.00	-14.79	AV
High channel:2462MHz							
V	4924.00	51.81	-0.32	51.49	74.00	-22.51	PK
V	4924.00	42.07	-0.32	41.75	54.00	-12.25	AV
V	7386.00	45.23	9.35	54.58	74.00	-19.42	PK
V	7386.00	35.72	9.35	45.07	54.00	-8.93	AV
H	4924.00	49.48	-0.32	49.16	74.00	-24.84	PK
H	4924.00	40.28	-0.32	39.96	54.00	-14.04	AV
H	7386.00	42.74	9.35	52.09	74.00	-21.91	PK
H	7386.00	34.45	9.35	43.80	54.00	-10.20	AV

Remark:

1.Emission Level = Meter Reading + Factor,

Factor = Antenna Factor + Cable Loss – Pre-amplifier.

Over= Emission Level - Limit

2.If peak below the average limit, the average emission was no test.

3. In restricted bands of operation, The spurious emissions below the permissible value more than 20dB

4. The amplitude of spurious emissions which are attenuated by more than 20dB below the permissible value has no need to be reported.

5. The worst case is mimo mode..

802.11n40

Polar (H/V)	Frequency (MHz)	Reading Level (dBuV/m)	Correct Factor (dB)	Measure-ment (dBuV/m)	Limits (dBuV/m)	Over (dB)	Detector Type
Low channel:2422MHz							
V	4844.00	54.51	-0.43	54.08	74.00	-19.92	PK
V	4844.00	45.43	-0.43	45.00	54.00	-9.00	AV
V	7266.00	46.96	8.31	55.27	74.00	-18.73	PK
V	7266.00	37.85	8.31	46.16	54.00	-7.84	AV
H	4844.00	52.89	-0.43	52.46	74.00	-21.54	PK
H	4844.00	42.72	-0.43	42.29	54.00	-11.71	AV
H	7266.00	43.99	8.31	52.30	74.00	-21.70	PK
H	7266.00	35.09	8.31	43.40	54.00	-10.60	AV
Middle channel:2437MHz							
V	4874.00	51.44	-0.38	51.06	74.00	-22.94	PK
V	4874.00	44.23	-0.38	43.85	54.00	-10.15	AV
V	7311.00	42.76	8.83	51.59	74.00	-22.41	PK
V	7311.00	33.02	8.83	41.85	54.00	-12.15	AV
H	4874.00	48.37	-0.38	47.99	74.00	-26.01	PK
H	4874.00	37.57	-0.38	37.19	54.00	-16.81	AV
H	7311.00	41.75	8.83	50.58	74.00	-23.42	PK
H	7311.00	32.92	8.83	41.75	54.00	-12.25	AV
High channel:2452MHz							
V	4904.00	53.41	-0.32	53.09	74.00	-20.91	PK
V	4904.00	44.16	-0.32	43.84	54.00	-10.16	AV
V	7356.00	46.98	9.35	56.33	74.00	-17.67	PK
V	7356.00	37.57	9.35	46.92	54.00	-7.08	AV
H	4904.00	52.11	-0.32	51.79	74.00	-22.21	PK
H	4904.00	41.14	-0.32	40.82	54.00	-13.18	AV
H	7356.00	45.55	9.35	54.90	74.00	-19.10	PK
H	7356.00	37.94	9.35	47.29	54.00	-6.71	AV

Remark:

1.Emission Level = Meter Reading + Factor,

Factor = Antenna Factor + Cable Loss – Pre-amplifier.

Over= Emission Level - Limit

2.If peak below the average limit, the average emission was no test.

3. In restricted bands of operation, The spurious emissions below the permissible value more than 20dB

4. The amplitude of spurious emissions which are attenuated by more than 20dB below the permissible value has no need to be reported.

5. The worst case is mimo mode.