AMSINO

Advancing Healthcare Worldwide®

iReceptal Digital Surgical Suction System

Installation, Operation and Maintenance Guide

100～120 VAC Rover

REF iRR301-01

220～240 VAC Rover

REF iRR302-01

Instructions For Use

R_x ONLY

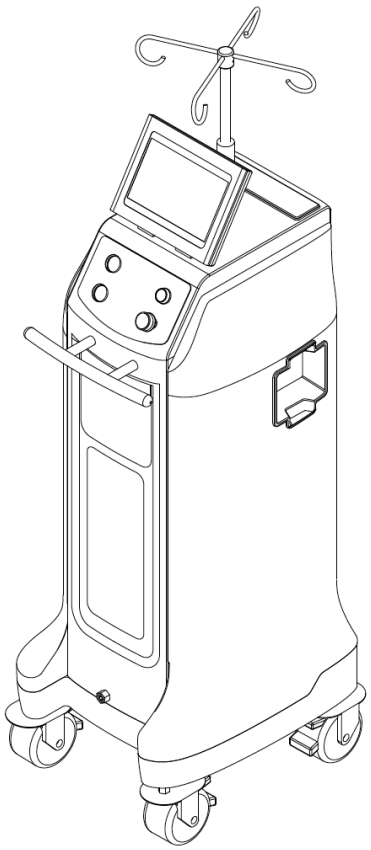

⚠ WARNING:

HIGH SUCTION DEVICE

Only trained and experienced healthcare professionals may use this equipment.

DO NOT connect directly to chest tubes.

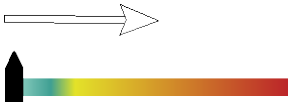

ALWAYS use the minimum suction setting required to achieve the desired clinical outcome.

DO NOT connect to closed wound drains.

NOT FOR USE as a suction source for organ stabilizer/ positioner or patient positioner devices.

DO NOT connect directly to tracheal tubes.

NOT FOR USE as a suction source for intermittent suction applications.

FAILURE TO COMPLY COULD RESULT

IN SERIOUS INJURY OR DEATH.

DO NOT remove any safety card from the equipment.

For more information, including safety information, or in-service training, contact your AMSINO sales representative or call iReceptal Customer Service at XXXXXXXX

Contents

Introduction 5
- Conventions 5
- Contact Information 5

Indications For Use 5
Contraindications For Use 5
For Use With 5
Accessories 6
System Overview 6
User/Patient Safety 8
- General 8
- Low Suction 9
- High Suction 9
- Electrical Safety 9
- Environmental/Biological 10

Features 12
Physical Buttons 14
Graphical user interface 14
- System On 15
- High suction device warning view 15
- Patient information input view 15
- Manifold installation view 16
- Main view 17
- Settings View 19
- Data View 20
- Help View 21
- Wash Cycle View 23
- Popup View 24

Definitions 25
- Suction Setting Colors 25
- Notification Message 25
- Audible Event Indicators 25
- Symbols 26

Instructions 28
- Before First Use 28
  - To Unpack the Rover 28
  - To Initially Dock the Rover 28
  - To Test the Rover 28
    1. To Connect Power 28
    2. To Test Fluid Suction 29
    3. To Test Smoke Evacuation 29
    4. To Test the IV Pole 30
    5. To Test the Chamber access doors 30

6. To Test the 4.5-liter Chamber light 31
7. To Test the UV light 31
To Adjust the Rover Settings 32
Before the Procedure 32
To Setup the Rover 32
1. To Connect Power 33
2. To Prepare For Fluid Suction 33
3. To Prepare For Smoke Evacuation 34
4. To Use the IV Pole 35
5. To Use the 4.5-liter Chamber light 35
During the Procedure 36
To Operate the Rover 36
1. To Control Fluid Suction 37
2. To Control Smoke Evacuation 37
3. To Adjust the IV Pole 38
4. To Open or Close the Chamber access doors 38
5. To Open or Close the 4.5-liter Chamber light 38
6. To Manage Full Canister 39
After the Procedure 40
To Shutdown the Rover 40
1. To Remove Fluid Suction Components 40
2. To Remove Smoke Evacuation Components 41
3. To Remove IV Pole Components 42
4. To Remove Power 42
5. To Prepare for Relocation 42
6. To Relocate the Rover 43
To Dock the Rover 43
1. To Prepare the Docker 44
2. To Perform a Wash Cycle 44
Inspection and Maintenance 45
Cleaning 47
Recommended Equipment 47
To Wipe Down the Rover 47
Storage and Handling 48
Disposal/Recycle 48
Troubleshooting 49
Error Messages 52
Specifications 53
Electromagnetic Compatibility 56
Appendix 59
To Use Auxiliary Suction Ports (optional) 59

Introduction

This Instructions For Use manual is the most comprehensive source of information for your product. Keep and consult this reference manual during the life of the product.

Conventions

The following conventions are used in this manual:

WARNING: A warning highlights a safety-related issue. ALWAYS comply with this information to prevent patient or healthcare staff injury.

CAUTION: A caution highlights a product reliability issue. ALWAYS comply with this information to prevent product damage.

NOTE: A note supplements and/or clarifies procedural information.

Contact Information

For additional information, including safety information, or in-service training, contact your AMSINO sales representative or call AMSINO iReceptal Customer Service at XXXXXX.

Indications For Use

The iReceptal Digital Surgical Suction System is intended to be used in the operating room, pathology, surgical centers, and doctor's offices to collect and dispose of surgical fluid waste as well as collect smoke generated from electrocautery or laser devices.

Contraindications For Use

The iReceptal Digital Surgical Suction System is contraindicated against:

▪ Connection directly to chest tubes.

▪ Connection to closed wound drainage systems.

For Use With

The following components are required to be used with the equipment described in this manual to create a complete system:

Description	REF
iReceptal 3 Docking Station	iRD301-01 110~120V iRD302-01 220~230V
iReceptal 3 Docking Detergent	iRC003
iReceptal 3 Manifold(s)	iRM300-01
iReceptal 3 Manifold with suction tubing	iRM301-01
Smoke Evacuator ULPA filter	iRF300-01

Fluid suction tubing	

NOTE: Smoke Evacuator tubing and other accessories are also required for a complete system. These components may not be sold by AMSINO. See the Contact Information section for more information.

Accessories

This section describes system components that may be ordered to replace original equipment that is damaged, worn, or must be replaced. This section may also contain optional components used with the system.

The following AMSINO-approved accessories are sold separately:

Description	REF
iReceptal 3 Docking Detergent	iRC003
iReceptal 3 Manifold	iRM300-01
Smoke Evacuator ULPA Filter	iRF300-01
Fluid suction tubing	iRA104-01
Pneumatic Footswitch	iRA100-01
Power Cord (US)	iRA101-01
Power Cord (UK)	iRA102-01
Power Cord (EU)	iRA103-01

NOTE: For a complete list of accessory information, contact your AMSINO sales representative or call AMSINO iReceptal Digital Surgical Suction System Customer Service.

System Overview

The iReceptal Digital Surgical Suction System Rover (rover) is a mobile unit used to suction and collect fluid waste and surgical smoke from a surgical site in an operating room. The rover also has a height-adjustable, powered IV pole.

During collection, fluid waste is removed from the surgical site through suction tubing connected to inlet ports of manifold installed in the rover. The fluid waste is collected in the canister of the rover (Figure 1). The canister design allows suction setting and fluid volume measurement capability. The vacuum pump exhaust is filtered.

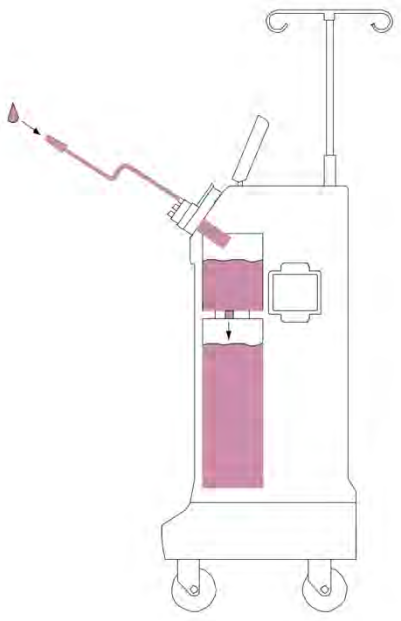

Figure 1 To collect Fluid Waste

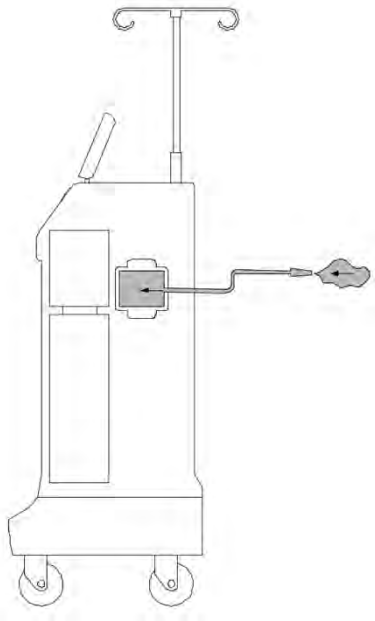

Figure 2 To Evacuate Surgical smoke

Surgical smoke may also be evacuated from the surgical site through smoke tubing connected to the smoke evacuator filter installed in the rover. The surgical smoke is filtered inside the rover (Figure 2).

After collection, the rover is relocated and mated to the iReceptal Digital Surgical Suction System Docking Station (docker). Once the rover is connected to the docker, the emptying of the fluid waste and cleaning of the upper chamber and Lower Chamber of the canister occurs automatically (Figure 3).

The upper chamber and Lower Chamber of the rover canister are rinsed with clean water and iReceptal Digital Surgical Suction System Docking Detergent REF iRC003 to clean the canister of any residual fluid waste (Figure 4).

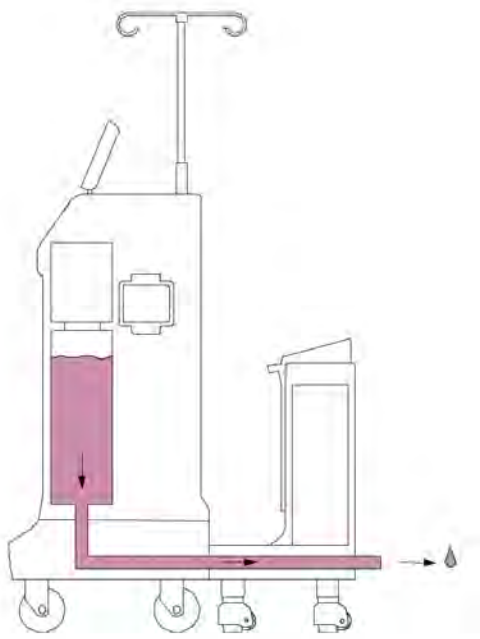

Figure 3 To Empty the Canister

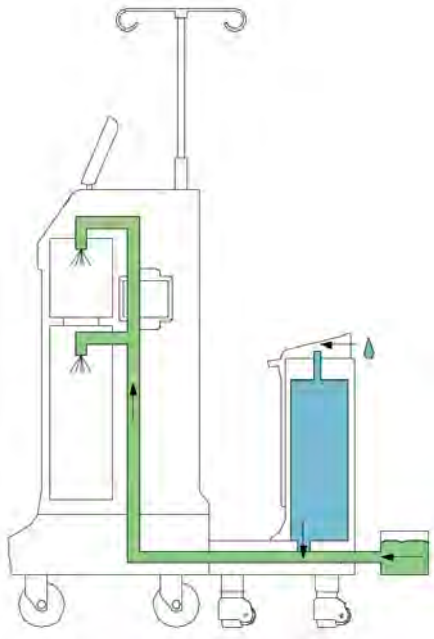

Figure 4 To Clean the Canister

User/Patient Safety

⚠ WARNINGS：

General

- Before using any system component, or any component compatible with this system, read and understand the instructions. Pay particular attention to WARNING information. Become familiar with the system components prior to use.
- Only trained and experienced healthcare professionals may use this equipment.
- Healthcare professionals should be thoroughly familiar with the instructions for use, handling characteristics, and the indicated and intended uses of this equipment. Contact your AMSINO sales representative or AMSINO iReceptal Digital Surgical Suction System Customer Service for in-service training.
- The healthcare professional performing any procedure is responsible for determining the appropriateness of this equipment and the specific technique used for each patient. AMSINO, as a manufacturer, does not recommend surgical procedure or technique.
- DO NOT disassemble, modify, service, or repair any system component or accessory, unless otherwise specified. Call AMSINO iReceptal Digital Surgical Suction System Customer Service.
- Upon initial receipt and before each use, inspect each component for damage. DO NOT use any equipment if damage is apparent or the inspection criteria are not met. See the Inspection and Maintenance section for inspection criteria.
- ALWAYS operate the equipment within the specified environmental condition values. See the Specifications section.
- The canister scale and fluid volume display are not diagnostic tools. DO NOT use the scale or fluid volume display to determine the amount of fluid lost from or retained by the patient.
- DO NOT cover the device user interface with drapes or other objects. Make sure the user interface can be clearly seen.
- TIPPING HAZARD — DO NOT lean on the rover. Please pull the handle when cross the step, do not push the rover.
- MANUFACTURER will provide circuit diagrams, component part lists, descriptions, calibration instructions to assist to SERVICE PERSONNEL in parts repair.
- Do not use iReceptal Digital Surgical Suction System in the presence of magnetic resonance imaging (MRI) devices.
- The use of ACCESSORIES other than those specified by AMSINO or sold by AMSINO as replacement parts for internal components, may result in increased emissions or decreased immunity of the iReceptal Digital Surgical Suction System.

Low Suction

- LOW SUCTION HAZARD

  NOT FOR USE as a suction source for the following applications:

  - Organ stabilizer/positioner devices
  - Patient positioner devices

  Death or serious injury can result from fluctuating suction levels.

High Suction

- HIGH SUCTION DEVICE [MAX = 528 mmHg/70kPa]
  - The effectiveness of aspiration is dependent upon the intensity of the vacuum applied.
  - ALWAYS use the minimum suction setting required to achieve the desired clinical outcome.
  - ALWAYS follow your institution's guidelines for suction limits.
  - DO NOT connect directly to chest tubes.
  - DO NOT connect to closed wound drains.
  - DO NOT connect directly to tracheal tubes.
  - NOT FOR USE as a suction source for intermittent suction applications.

  Death or serious injury can result from improper suction levels.

- The suction setting may only be adjusted by the SUCTION SETTING on the touch display. Interruption and restoration of rover power, whether accidental or intentional, does not reset the suction setting to zero.

Electrical Safety

- Use only AMSINO-approved system components and accessories, unless otherwise specified. Using other electronic components and accessories may result in increased electromagnetic emissions or decreased electromagnetic immunity of the system.
- Take special precautions regarding electromagnetic compatibility (EMC) when using medical electrical equipment like this system. Install and place this system into service according to the EMC information contained in this manual. See the Specifications section
- This equipment utilizes mobile RF communications equipment that can affect medical electrical equipment.
- Please take attention that changes or modification not expressly approved by the party responsible for compliance could void the user's authority to operate the equipment.
- This device complies with Part 15 of the FCC Rules. Operation is subject to the following two conditions:
  (1) This device may not cause harmful interference, and
  (2) This device must accept any interference received, including interference that may cause undesired operation.
- This device complies with Industry Canada licence-exempt RSS standard(s). Operation is subject to the

following two conditions:
(1) this device may not cause interference, and
(2) this device must accept any interference, including interference that may cause undesired operation of the device.

- Le présent appareil est conforme aux CNR d'Industrie Canada applicables aux appareils radioexempts de licence. L'exploitation est autorisée aux deux conditions suivantes :
- (1) l'appareil ne doit pas produire de brouillage, et
- (2) l'utilisateur de l'appareil doit accepter tout brouillage radioélectrique subi, même si le brouillage est susceptible d'en compromettre le fonctionnement.
- This equipment complies with FCC/IC RSS-102 radiation exposure limits set forth for an uncontrolled environment. This equipment should be installed and operated with minimum distance 20cm between the radiator & your body.
- ce matériel est conforme aux limites de dose d'exposition aux rayonnements, FCC / CNR-102 énoncée dans un autre environnement.cette eqipment devrait être installé et exploité avec distance minimale de 20 entre le radiateur et votre corps.
- Under Industry Canada regulations, this radio transmitter may only operate using an antenna of a type and maximum (or lesser) gain approved for the transmitter by Industry Canada. To reduce potential radio interference to other users, the antenna type and its gain should be so chosen that the equivalent isotropically radiated power (e.i.r.p.) is not more than that necessary for successful communication.
- Conformément à la réglementation d'Industrie Canada, le présent émetteur radio peutfonctionner avec une antenne d'un type et d'un gain maximal (ou inférieur) approuvé pour l'émetteur par Industrie Canada. Dans le but de réduire les risques de brouillage radioélectrique à l'intention des autres utilisateurs, il faut choisir le type d'antenne et son gain de sorte que la puissance isotrope rayonnée équivalente (p.i.r.e.) ne dépasse pas l'intensité nécessaire à l'établissement d'une communication satisfaisante.

- ELECTRICAL SHOCK HAZARD
  - ALWAYS connect this equipment to a hospital-grade, facility power receptacle with protective earth (ground).
  - Do not position Rover so that disconnecting the device is difficult.
  - DO NOT touch or make contact with the rover and patient simultaneously.

Failure to comply may cause electrical shock and result in patient or healthcare staff injury.

Environmental/Biological

- FIRE HAZARD – DO NOT use this equipment in areas in which flammable anesthetics or flammable agents are mixed with air, oxygen or nitrous oxide. Failure to comply may cause a fire and result in burn injury or property damage.

- BLOODBORNE PATHOGEN HAZARD
  - The Bloodborne Pathogens Standard provided by the United States Occupational Safety and Health Association (US OSHA 29 CFR 1910.1030) requires those with employees having occupational exposure to potentially infectious materials to establish a written Exposure Control Plan. The Exposure Control Plan is designed to eliminate or minimize employee exposure through use of personal protective equipment (PPE), appropriate vaccinations (e.g. hepatitis B), and other control measures.

- ALWAYS wear PPE when operating or handling this equipment.
- ALWAYS follow local regulations regarding proper handling and disposal of biohazard waste.

Failure to comply may cause infection and result in healthcare staff injury.

- ALWAYS clean the equipment as indicated upon initial receipt and before each use. DO NOT place the rover within the sterile field. Failure to comply may cause infection and result in patient or healthcare staff injury.
- CONTAMINATION HAZARD
  - DO NOT collect fluids from patients being treated with radioisotopes or hazardous chemical agents.
  - ALWAYS follow local regulations for safe handling, recycling, and disposal of biohazard fluid waste and equipment. See Disposal/Recycle section.

Failure to comply may cause environmental contamination and result in injury.

- The manifold is for SINGLE PATIENT USE ONLY. DO NOT sterilize or reuse. DO NOT reuse, reprocess, or repackage a single use device. A single use device is intended for a single use only. The single use device may not withstand chemical, chemical vapor, or high temperature sterilization reprocessing. Design features may make cleaning difficult. Reuse may create a serious risk of contamination and may compromise the structural integrity of the device resulting in operational failure. Critical product information may be lost if the device is repackaged. Failure to comply may lead to infection or cross-infection and result in patient or healthcare staff injury.
- ALWAYS make sure rover power is ON when collecting fluid waste. The rover can only detect full canister if the rover is ON. If the rover is OFF, biohazard waste leakage or loss of suction can occur.

Features

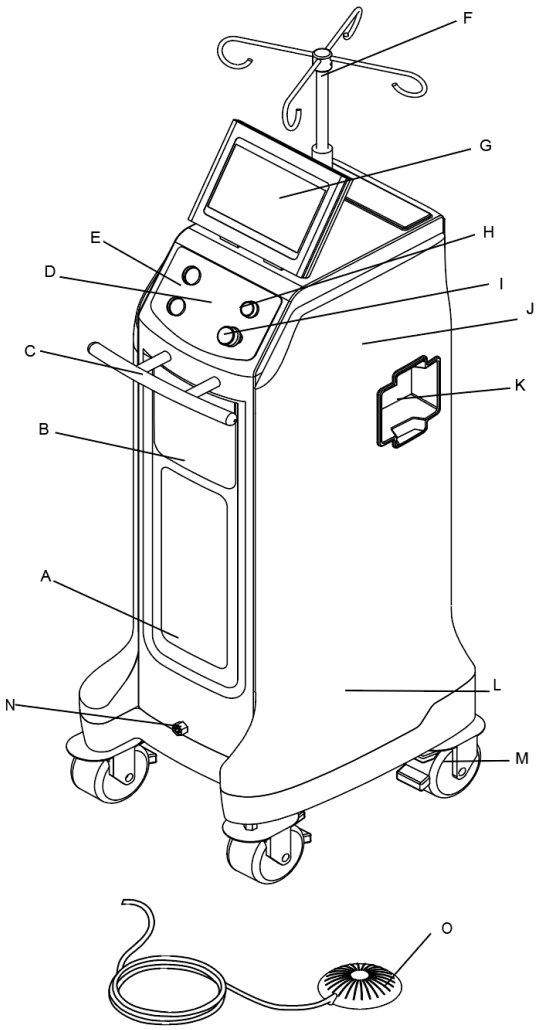

Figure 5 Rover Front View

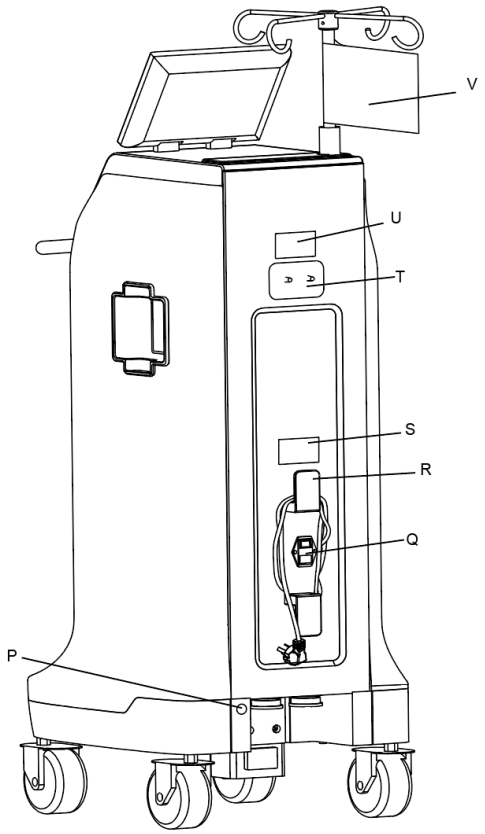

Figure 6 Rover Back View

A	22L (22-liter) Lower Chamber of Canister – Allows for the containment of liquids. The 22-liter Lower Chamber receives fluid through the upper chamber during the collection of fluid waste. The Lower Chamber contains a fluid level sensor to provide input to the LCD display.
B	4.5L (4.5-liter) upper chamber of Canister – Allows for the collection and containment of liquids. The 4.5-liter upper chamber receives fluid through an installed manifold during the collection of fluid waste. The upper chamber contains a light to provide a good view, also contains a fluid level sensor to provide input to the LCD display.
C	Handle – Allows for relocation and positioning of the rover.
D	High Suction Device WARNING Label –
E	Manifold socket – Allows installation of a disposable manifold into the canister. The port can be closed when a manifold is removed. Closure prevents fluid leakage during transport and docking and

	prevents foreign objects from entering the canister.
F	Powered IV Pole – This motor-powered IV pole is capable of holding four three-liter [3000 mL] IV bags, one bag per hook.
G	LCD Display – Provides the operation of rover. Provides visual display of the fluid volume values of each chamber. Display brightness may also be adjusted. See the To Adjust the Rover Settings section. Provides suction values for the canister, system status and error messages.
H	Suction Off/Stop Docking Button– Push the button to stop suction when suction on. Push the button to stop docking when docking.
I	Pop the manifold out Button – Push the button to pop the manifold out.
J	Speaker (not shown) – Located inside the rover, provides audible event indicators. See the Audible Event Indicators table.
K	Smoke Evacuator ULPA Filter Compartment – Allows for the installation and removal of a disposable smoke evacuator filter with an Ultra Low Penetrating Air (ULPA) efficiency rating.
L	Single Vacuum Pump (not shown) – Creates suction for the canister.
M	Casters (four) – Four swivel casters allow the rover its mobility. The four casters have locks to prevent inadvertent movement during operation.
N	Footswitch Jack - Allow connection to a pneumatic footswitch. When the footswitch is plugged in, the fan may be turned on or off by depressing the footswitch pedal once for each operation.
O	Footswitch Pedal – Allows turn on or off the Fan by depressing the Footswitch pedal once for each operation.
P	Infrared Communication Window – Allows data transfer between the docker and rover. Data transfer is necessary during the docking procedure.
Q	Power Cord Receptacle/Switch – Connect facility power to the receptacle using the rover power cord. Tap the toggle switch to apply or remove facility power. See the Definitions section for ON and OFF power symbol definitions.
R	Power Cord Bracket/Cord – Store the power cord on the bracket. Use the power cord to connect the rover to facility power.
S	Specification Label –
T	Auxiliary Suction Ports (optional) – Allow connection to a hospital wall suction regulator if an alternate suction source is required. See the Appendix, To Use Auxiliary Suction Ports (optional) section.
U	Auxiliary Suction Ports Label – AUXILIARY SUCTION PORTS (Connect to hospital wall suction regulator)
V	Quick Reference Cards – Allows for quick access to specific High suction device information and Tipping Hazard WARNING.

Physical Buttons

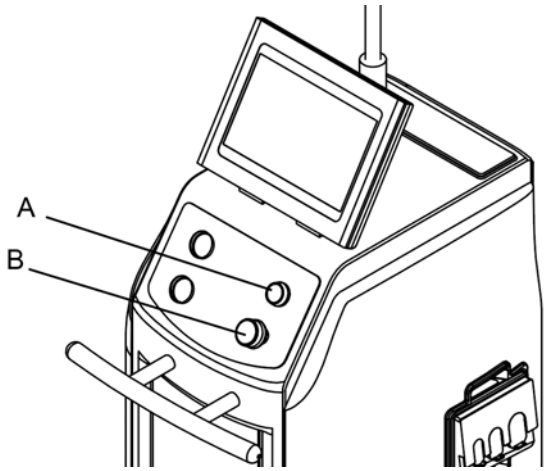

A	Suction Off/Stop Docking Button– Push the button to stop fluid suction or stop docking.
B	Pop the manifold out Button – Push the button to pop the manifold out.

Graphical user interface

iReceptal Digital Surgical Suction System Rover display is a touch screen, where you slide (1) or tap (2) the icons and soft keys gently with your fingertip to select them.

- 1. Tapping soft key

- 2. Sliding soft key

Touch screen colors

When a screen item is interactive, it is displayed in green. Soft keys have a green outline and icons

with available functions appear green.

Disabled items or inactive items appear grey.

When you tap a screen item, the item is filled with green to give feedback on successful action.

System On

The system will present a “welcome screen” automatically after connected to the facility power with the switch turned “ON”.

High suction device warning view

Without any operation, the “high suction device warning view” will pop up.

Read the content of the warning information, tap the "Confirm" button to control the user interaction interface.

Patient information input view

After obtaining the control user interaction interface, please follow the requirements to input patient information, you can skip it by tapping the "skip" button below.

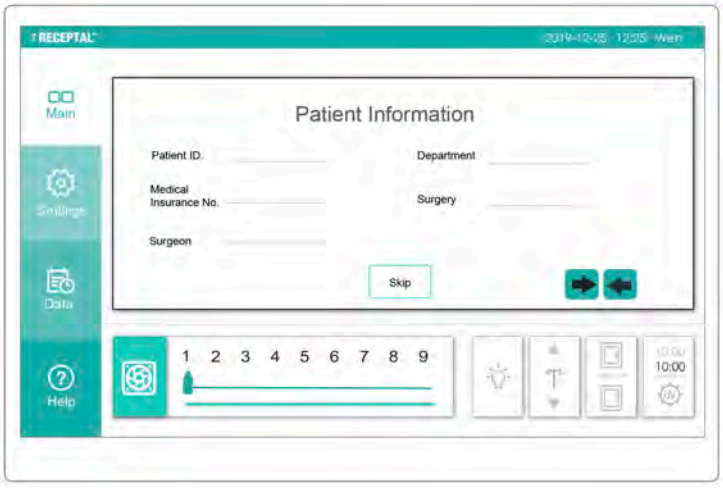

Manifold installation view

Please follow the requirements to install the manifold. For help information about installation, see the "Help View" section.

Install a new disposable manifold into the manifold socket. Make sure the manifold is fully inserted and locked into place. See the instructions for use supplied with the manifold for more information

The Manifold installation view is divided into three functional sections:

1. The left section contains four soft keys for switching the view of the interface: Main, Settings, Data, and Help. For the definitions of these soft keys, please refer to the “Main View” section.
2. The middle section allows for opening and closing the manifold socket.
3. The bottom section allows the control of smoke evacuator and the adjustment of the smoke evacuator flow rates and also contains the upper chamber light, the IV pole, the upper and Lower Chamber windows, and the UV light soft keys. For the definitions of these soft keys, please refer to the Main View section.

Main view

The main view is divided into five functional sections:

1. The left section (1) contains four soft keys for switching the view of the interface: Main, Settings, Data, and Help.
2. The middle sections (2) (3) allow start the pump and the adjustment of the suction setting level, also, right the suction regulator shows a graphical presentation of the upper chamber and Lower Chamber of the canister status and collected fluid.
3. The right section (4) allows the control of smoke evacuator and the adjustment of the smoke evacuator flow rates.
4. The bottom section (5), from the left to the right is manifold socket, the auxiliary suction port, the upper chamber light, the IV pole, the upper and Lower Chamber windows, and the UV light soft keys.

Left section

The Main key opens the Main view. For more information, see “Main view”.

The Settings key opens the Settings view. For more information, see “Settings view”.

The Data key opens the Data view. For more information, see “Data view”.

The Help key opens the Help view. For more information, see “Help view”.

Middle section

Notification Message area – The area displays Notifications//Warnings. The area flashes "High vacuum in operation" as the negative Suction Setting value is in the high negative pressure range. when the canister is full, this area flashes "Canister full, Dock the Rover".

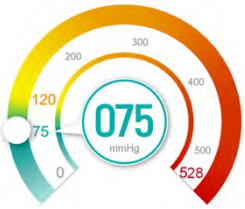

Suction Level Value Area – Provides the suction level value for the canister. The actual negative pressure value is displayed in the middle, indicating the current suction level actually present in the canister. Actual values may fluctuate and may be significantly lower than the set value.

Start fluid Suction key –Tap the Start Suction key to start the vacuum pump. When the manifold has been used or the canister is full, etc., the negative pressure pump cannot be turned on. For more information, see the "Troubleshooting" section.

Suction Setting key – Tap the key to input the pressure value through the pop-up numeric keyboard. The Suction Setting value will be displayed in this position. The Suction Setting should not exceed the pressure range specified by this equipment.

Suction Setting Bar – Tap any position on the Setting bar or slide the point to adjust the Suction Setting value. Any operation on the “Suction Setting Bar” should last one second that can activate it.

Note: When the Suction Setting is in the high negative pressure range, “High vacuum in operation" voice message will be heard with Message area flashes the relative notification.

Current volume area – Displays the current total volume since last reset or since start the suction.

Reset key – Reset the current volume to zero by tapping it.

Fluid Level Display Area – The volume of fluid is displayed by numbers and graphics. The total volume of the Upper chamber is 4.5L and the total volume of the Lower Chamber is 22L. As the fluid increases, the figures and volume increase automatically.

Note: When the Lower Chamber is full, “Lower chamber Full" voice message will be heard with Message area flashes the relative notification. When the Canister is full, “Canister full, please dock the Rover " voice message will be heard with Message area flashes the relative notification.

Empty 4.5L upper chamber key – Opens the valve between the upper chamber and the Lower Chamber of the canister and transfers the contents of the 4.5-liter chamber into the 22-liter chamber, the valve will be closed automatically when the 4.5-liter chamber is empty.

Right section

Smoke Filter Indicator – Displays the smoke filter's remaining usable time as a percentage.

Note: When the maximum filter is consumed, "Smoke Filter about to its useful life" voice message will be heard with Message area flashes the relative notification.

Smoke Evacuator Power Setting bar – Tap any position on the Setting bar or slide the point to adjust the Smoke evacuator power.

Smoke Evacuator Power Setting key – Tap the key to input the smoke evacuator power through the pop-up numeric keyboard. The smoke evacuator power value will be displayed in this position.

Smoke Evacuator key – Tap the smoke evacuator icon to turn on or turn off the smoke evacuator. When the smoke filter expired or installed incorrectly, etc., the smoke evacuator cannot be turned on. For more information, see the "Troubleshooting" section.

Bottom section

Manifold socket Key – Tap the right direction icon to open the manifold socket, tap and hold the left direction icon to close the manifold socket.

Auxiliary Suction Ports key—Tap the key to turn on the Auxiliary suction when use the auxiliary suction ports.

Upper Chamber Light key- Tap the key to turn on or turn off the upper chamber light.

IV Pole key - Tap and hold the UP or DOWN arrow key to raise or lower the height of the IV pole, respectively.

Upper/Lower Chamber Access Door key- Tap and hold the upper or lower window key to open or close the window of the chamber, respectively.

UV Light key-Tap the key to turn on the UV light, the clock starts counting down, the UV light will be turned off automatically as the clock display 00：00.

Settings View

Tap the Settings key to access the setup view with options for custom settings.

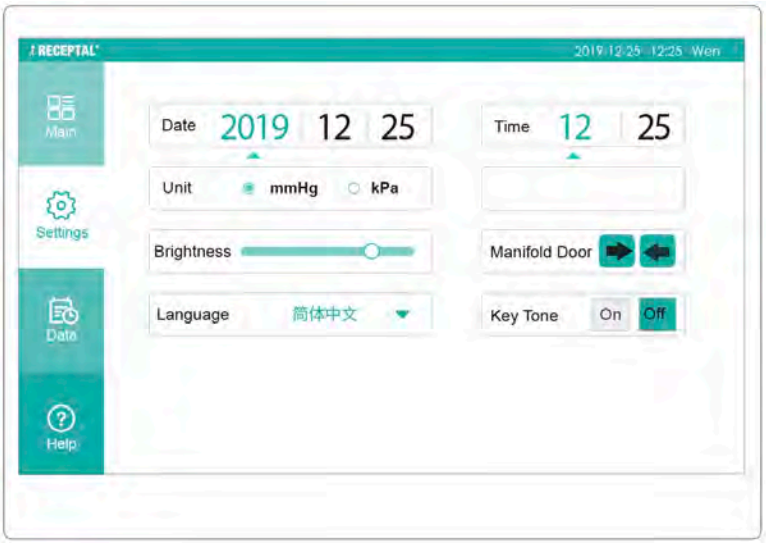

System Setting Options

Menu	Settings	Function	Default
Date	YYYY-MM-DD	Tap the year box. The selected box is highlighted. Adjust the year with the arrow keys. The arrow keys only affect the selected box.	2020-01-01
Time	hh : mm	Tap the hours box. The selected box is highlighted. Adjust the hours with the arrow keys. The arrow keys only affect the selected box.	00：00
Suction unit	kPa, mmHg	Tap the key to select the suction unit shown on the screen.	mmHg
Display Brightness		Tap or slide the display brightness level gauge to adjust the display brightness	
Language	简体中文，English, French, German, 韩语	Tap the arrow key to select the language of the user interface. Note: To activate the language selection a device restart is required.	English
Manifold Door		Tap the right direction icon to open the manifold socket, tap and hold the left direction icon to close the manifold socket	------
Key Tone	on, off	Tap the Audio key to switch fluid audible indicators ON and OFF.	On

Data View

Tap the Data key to access the Data view. The device automatically saves a summary of the last 1000 operations. There are two data sheets in this data view, one for fluid suction operations and

another one for docking operations, change the view by tapping the Data key.

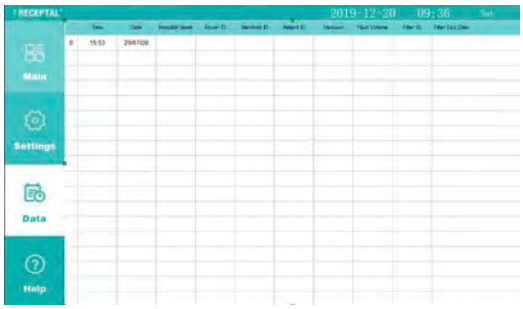

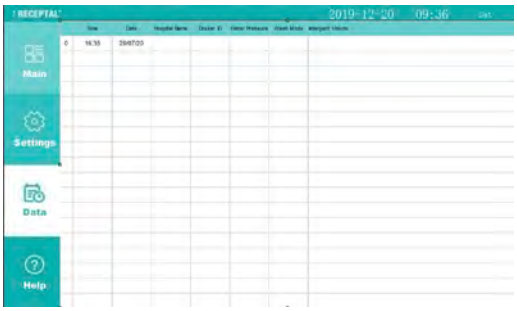

The following data is saved for every fluid suction operation:

Time	Date	Hospital name	Rover ID	Manifold ID	Patient ID	Vacuum	Fluid Volume	Filter ID	Filter Exp. life

The following data is saved for every docking operation:

Time	Date	Hospital name	Docker ID	Manifold ID	Water pressure	Washing cycle	Detergent volume

Help View

Tap the “Help” key to access the Help view with the operation instructions and the troubleshooting.

The Help view is divided into two sections:

1. The left section is the operation instructions, including: Manifold, Rover Operation, and Docking Drain and Clean.
2. The right section is the Troubleshooting, including: Manifold Troubles, Rover Troubles, and Docker Troubles.

Operation Instructions

Manifold Operation

Manifold Operation instruction key-Tap the key opens the Manifold related operation instructions. For more information, see “Operation Instructions table”.

Rover Operation

Rover Operation instruction key-Tap the key opens the Smoke filter related operation instructions. For more information, see “Operation Instructions table”.

Docking Drain and Clean

Docking operation instruction key - Tap the key opens the Docking related operation instructions. For more information, see “Operation Instructions table”.

Troubleshooting

Manifold Troubles

Manifold related troubleshooting key-Tap the key opens the Manifold related troubleshooting. For more information, see “Troubleshooting table”.

Rover Troubles

Rover related troubleshooting key-Tap the key opens the Rover related troubleshooting. For more information, see “Troubleshooting table”.

Docker Troubles

Docking related troubleshooting key-Tap the key opens the Docking related troubleshooting. For more information, see “Troubleshooting table”.

Operation Instructions table

Operation Instructions		Content
Manifold operation instruction	Manifold installation	1. Verify Orientation of the Manifold

		2. Make sure the manifold door is open 3. Insert the Manifold 4. Make sure the Manifold is inserted completely in place
	Manifold uninstallation	1. Eject Manifold To take out the manifold, please hold the manifold with one hand and push the "Eject Manifold" button with the other hand. 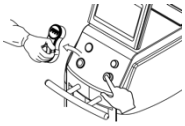
Rover operation instruction	Smoke filter installation	1. Please use new ULPA Filter with Encrypted RFID chips 2. Insert the ULPA Filter 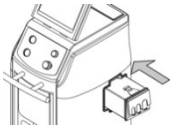 3. Connect the smoke suction tube to the port with correct dimension 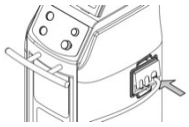
	Smoke filter uninstallation	4. Change the ULPA filter take out the ULPA filter from the ULPA compartment 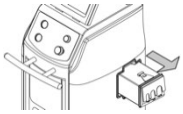
Docking operation instruction	**Docking**	1. Dock the Rover to Docker 2. Docker Operation Instructions
	Add detergent	1. Add detergent 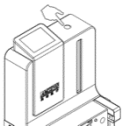

Wash Cycle View

As the rover and docker attached together, the Wash Cycle View will display automatically.

The Wash Cycle View is divided into four functional sections:

1. The left section presents the internal connections of the system.
2. The middle section is the three Wash Cycle keys, for the wash cycle options, please refer to the “Wash Cycle Options Table”.
3. The right section shows the shows a graphical presentation of the detergent volume and the pressure of the fresh water.
4. The bottom section, from the left to the right is the manifold socket door, the upper chamber light, the IV pole, the upper and Lower Chamber access doors, and the UV light soft keys. For the definitions of these soft keys, please refer to the Main View section.

Popup View

The popup view indicates an action you need to take to continue the procedure. Depending on the situation, the popup view can contain multiple options as soft keys or only one option for acknowledging the situation (for example, Confirm). The popup view disappears when you select one of the soft key options.

The device provides visual and audible alarm signals when an error condition is present. For the error conditions and informative messages and the actions to be taken, see the "Error" section.

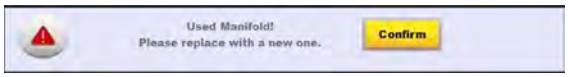

Popup Notification Message

Popup Notification	Description	Action
Used Manifold! Please replace with a new one.	Manifold has been used.	Replace manifold.
Please close the Manifold socket.	Manifold has been taken out.	Tap the left arrow icon to close the Manifold

		socket.
No Smoke Filter is detected. please install a smoke filter.	No Smoke Filter detected.	Replace smoke filter.
The smoke filter will expire in XX minutes. It can work about another XX minutes. please replace the filter timely.	Smoke filter will expire shortly.	Replace smoke filter.
Smoke filter expired. Please replace with a new one.	Smoke filter expired.	Replace smoke filter.
Please attempt to dock again.	Docker communication error	Dock rover again.
Insufficient supply water pressure! please adjust the supply water pressure setting or add water booter pump as necessary to assure desired cleanness.	Supply water which connected to docker is below the standard pressure.	Adjust the supply water pressure setting or add water booter pump as necessary.
Detergent volume low! please add detergent.	Detergent volume low.	Add detergent into detergent canister.

Definitions

Suction Setting Colors

COLOR	SUCTION LIMIT	RANGE
Red-	Maximum	528mmHg/70kPa
	High	121 to 528mmHg/ 16 to 70kPa
Yellow- Orange	Medium	76 to120 mmHg/ 10 to 16 kPa
Green-	Low	37 to 75mmHg/ 5 to 10 kPa

Notification Message

Notification Message	Action
Canister full, Dock the Rover	Relocate the rover to the docker and dock the rover
High vacuum in operation	Do not need any action

Audible Event Indicators

This table describes the indications associated with each type of system event.

TYPE	INDICATION
Manifold	Manifold identified, ready to use
High vacuum	High vacuum in operation
Canister full	Canister full, please dock the Rover
Error	Error

Lower chamber full	Lower chamber full
Dock	Docking in place
Smoke evacuator filter	Smoke evacuator filter about to its useful life

Symbols

The following symbols appear on the device and/or its labeling. For more information, see “Technical specifications”

Symbol	Description
Symbols on device	
	ON (POWER)
	OFF (POWER)
5L	5-LITER (5L) Chamber of the canister
25L	25-LITER (25L) Chamber of the canister
	ALTERNATING CURRENT (AC)
---	DIRECT CURRENT (DC)
	Type CF applied part, protection class against electrical shock
	General warning sign
	Refer to instruction manual/booklet
	This symbol is located near the protective ground locations on this device
	Caution: non-ionizing electromagnetic radiation
	Footswitch
HIGH VACUUM/HIGH FLOW Continuous Surgical Suction Range: -5 to -70 kPa / -37 to -528 mmHg	HIGH VACUUM/HIGH FLOW Continuous Surgical Suction Range: -5 to -70 kPa / -37 to -528 mmHg
	Manifold socket
	SMOKE FILTER COMPARTMENT
AUXILIARY SUCTION PORTS	AUXILIARY SUCTION PORTS
	Do not connect directly to chest tubes

	Do not connect directly to tracheal tubes
	Do not connect to closed wound drains
CE	This symbol signifies that the device is in conformity to the specifications of the Council Directive 93/42/EEC for medical products.
	Manufacturer. Date of manufacture.
REF	Catalog number
SN	Serial number
	Marking of electric and electronic equipment in accordance with Directive 2002/96/EC indicating separate collection for WEEE-Waste of electrical and electronic equipment when disposed.
Symbols on consumables	
	Consult instructions for use
	Do not reuse
LOT	Batch code
	Caution
LATEX	Latex free
DEHP DEHP-FREE	DEHP free
Symbols on exterior packaging	
	Fragile – handle with care
	This end up
	Keep dry
	Keep away from sunlight
Transport and storage conditions	
	Temperature limit: -20℃ ~+60 ℃

	Humidity limitation: 10% ~95%
	Atmospheric pressure limitation: 500 hPa ~ 1060 hPa
Operating conditions	
	Temperature limit: 10℃ ~+60 ℃
	Humidity limitation: 10% ~95%
	Atmospheric pressure limitation: 700 hPa ~ 1060 hPa

Symbols used in graphical user interface are explained in section System Overview.

Instructions

Before First Use

To Unpack the Rover

⚠ WARNING: HEAVY EQUIPMENT - ALWAYS have more than one person unpack and move this equipment from the shipping pallet. See the Specifications section for rover weight. Failure to comply may result in personal injury.

1. Remove the exterior packaging materials from the rover and recycle the material as required.

2. Using at least two people, remove the rover from the shipping pallet.

3. Inspect the rover and components for damage. If damage is apparent, DO NOT use the equipment.

To Initially Dock the Rover

See the To Dock the Rover section to perform initial docking of the rover.

To Test the Rover

1. <u>To Connect Power</u>

a. Connect the rover to facility electrical power using the power cord.

b. Tap the power switch to the ON position.

c. Read the WARNING message on the user interface, then tap the OK key to access the CONTROL screen (Figure 7).

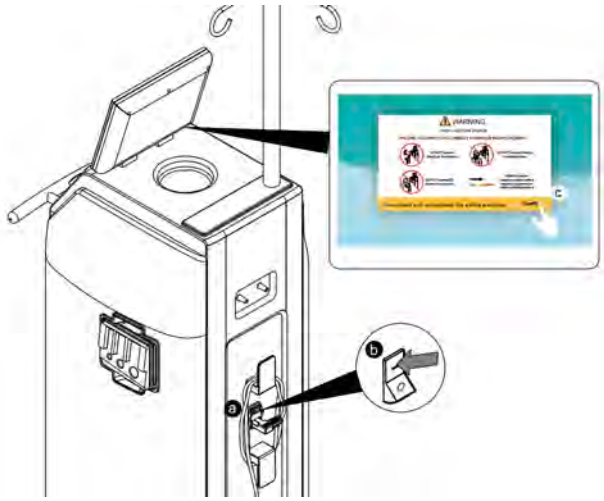

Figure 7 High Suction Device Warning

2. To Test Fluid Suction

a. After control the user interface, following the instructions of Patient information input view to input the patient information by scanning the patient's barcode with the scanner supplied with the rover or input the patient information directly or skip it by tapping the "skip" key below. See the Patient information input view section for more information.

b. Following the instructions of Manifold installation view to install a new disposable manifold into the manifold socket. Make sure the manifold is fully inserted and locked into place. See the instructions for use supplied with the manifold for more information.

c. Tap the START SUCTION key to start the vacuum pump (Figure 8). Make sure the vacuum pump starts. If not, see the Troubleshooting section.

d. Tap the SUCTION SETTING key to input or use the "Suction Setting Bar" to adjust the SUCTION level to the maximum suction level. Make sure the value displayed on the user interface changes and reaches a maximum suction level between 520 and 528 mmHg/ 68-70kPa. If not, see the Troubleshooting section.

Figure 8To Test Fluid Suction

3. To Test Smoke Evacuation

NOTE: Make sure a smoke evacuator filter is installed in the rover before testing smoke evacuation. See the Accessories section. See the instructions for use supplied with the smoke evacuator filter for installation information.

a. Tap the "Smoke Evacuator" key (Figure 9) or Depressing and releasing the footswitch (if connected).

Figure 9 To Test Smoke Evacuation

Figure 10 To Adjust Smoke Evacuation

b. Tap the "Smoke Evacuator Power Setting" key to input or use the " Smoke Evacuator Power Setting" bar to adjust the smoke evacuator power. Make sure the smoke evacuation functions correctly. If not, see the Troubleshooting section.

NOTE: See the “To Adjust the Rover Settings” section to make setting changes as required.

4. To Test the IV Pole

Tap the UP and DOWN ARROW of the IV Pole to control the IV pole (Figure 11). Make sure the IV pole functions correctly. If not, see the Troubleshooting section.

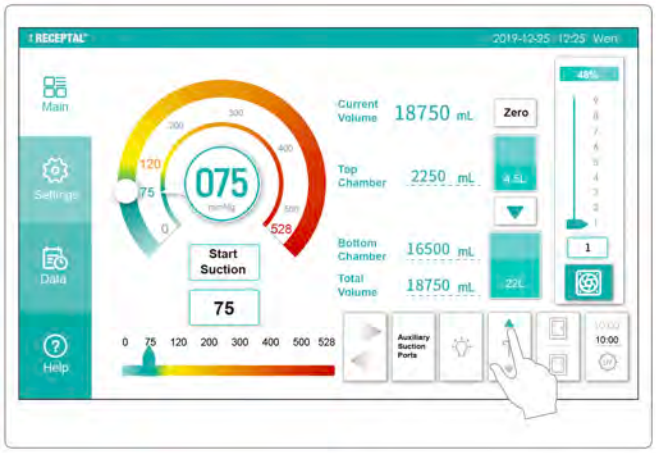

Figure 11 To Test IV Pole

5. To Test the Chamber access doors

Tap the Upper and Lower Chamber access door keys that control the Chamber access doors (Figure 12). Make sure the Upper and Lower Chamber access door functions correctly. If not, see the Troubleshooting section.

Figure 12 To Test Upper and Lower Chamber access door

6. To Test the 4.5-liter Chamber light

Tap the Chamber light key that control the Upper Chamber light (Figure 13). Make sure the 4.5-liter Chamber light functions correctly. If not, see the Troubleshooting section.

Figure 13 To Test 4.5-liter Chamber light

7. To Test the UV light

Tap the UV light key that control the UV light (Figure 14). Make sure the UV light functions correctly. If not, see the Troubleshooting section.

Figure 14 To Test UV light

To Adjust the Rover Settings

1. Make sure the power cord is connected between the rover and facility power.
2. Make sure the power switch is in the ON position and the HIGH SUCTION DEVICE WARNING has been acknowledged. Make sure the manifold is installed correctly.
3. From the user interface, tap the Settings key to open the system setup view (Figure15).
4. From the system settings view, tap as needed to select the system settings you want to adjust.
5. After setting adjustments are completed, the custom settings will be saved. For more setup information, please refer to the “Settings View” section and the “System Setting Options” section.

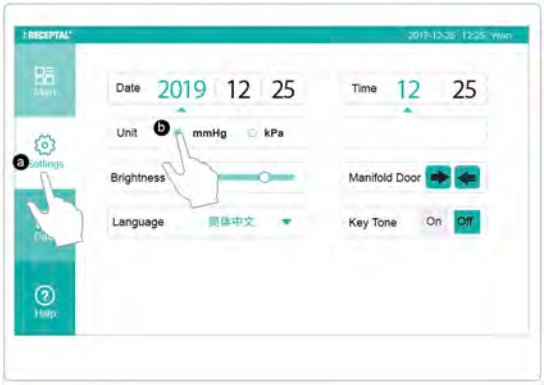

Figure 15 To Adjust the Rover

NOTE: After adjusting the rover system settings, disconnect the rover from facility power and wrap the power cord around the power cord bracket. The rover is now ready to be used in an operating room setting.

Before the Procedure

To Setup the Rover

⚠ WARNINGS：

- Upon initial receipt and before each use, inspect each component for damage. DO NOT use any equipment if damage is apparent or the inspection criteria are not met. See the Inspection and

Maintenance section for inspection criteria. DO NOT use the rover until it has been tested properly to ensure functionality. See the To Test the Rover section.

- ALWAYS clean the equipment as indicated upon initial receipt and before each use. DO NOT place the rover within the sterile field. Failure to comply may cause infection and result in patient or healthcare staff injury.

CAUTION: DO NOT clamp or attach any accessory onto the pole or base of the powered IV pole assembly.

NOTES:

- DO NOT use the rover until the docker has been installed and tested properly to ensure functionality. See the instructions for use supplied with the docker.
- ALWAYS close unused manifold ports, and remove or clamp unused tubing to maintain optimal suction levels.

1. To Connect Power

a. Position the rover on a flat surface and in a convenient location within the operating room.

b. Lock the rover's two front casters to prevent rover movement.

c. Orient the rover's touch screen for optimal viewing.

CAUTION: ALWAYS use the correct power cord. Configurations may vary. See the Accessories section for power cord options.

d. Connect the rover to facility electrical power using the appropriate power cord.

e. Push the power switch to the ON position.

f. Read the WARNING message on the user interface, then tap the OK key to access the CONTROL screen.

g. From the main view, tap the chamber access door keys to Open the canister access doors to allow viewing of the contents (Figure 16).

NOTE: If the suction setting is in the high suction range, the rover will provide an audible and visual indication of this condition. See the High Suction Indicator section.

Figure 16 To Connect Power

2. To Prepare For Fluid Suction

NOTE: The fluid suction tubing and suction accessory are applied parts.

a. After control the user interface, following the instructions of Patient information input view to input the patient information by scanning the patient's barcode with the scanner supplied with the rover or input the patient information directly or skip it by tapping the "skip" key below. See the Patient information input view section for more information.

b. Following the instructions of Manifold installation view to install a new disposable manifold into the manifold socket. Make sure the manifold is fully inserted and locked into place. See the instructions for use supplied with the manifold for more information.

c. Attach the fluid suction tubing to the port(s) of the installed manifold. ALWAYS close unused manifold ports.

d. Attach a fluid suction accessory to the end of the suction tubing if required.

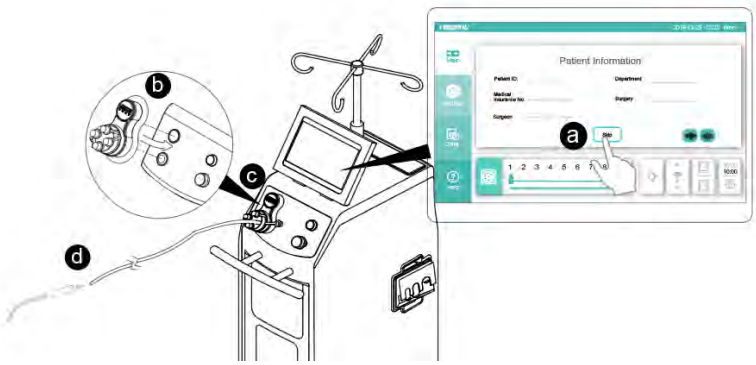

Figure 17 To Prepare for Fluid Suction

3. To Prepare For Smoke Evacuation

NOTES: Make sure a smoke evacuator filter is installed in the rover before using smoke evacuation. See the Accessories section. See the instructions for use supplied with the smoke evacuator filter for installation information.

a. Install the smoke evacuator tubing to the smoke evacuator filter.

b. Attach a smoke evacuator accessory to the end of the smoke tubing, if required.

c. Optional: Attach Footswitch plug into Footswitch jack on front bottom of rover.

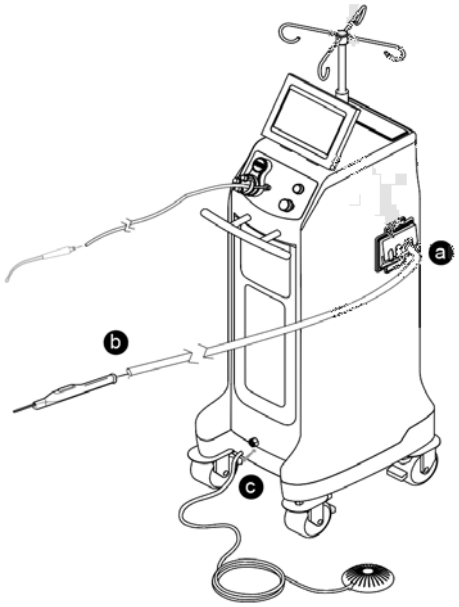

Figure 18 To Prepare for Smoke Evacuation

4. To Use the IV Pole

a. Hang one irrigation bag on each IV pole hook, if required. The maximum volume allowed per hook is 3000 milliliters (Figure 19).

b. Tap and hold the IV pole UP arrow key to raise the IV pole to the desired height.

c. See the To Operate the Rover section.

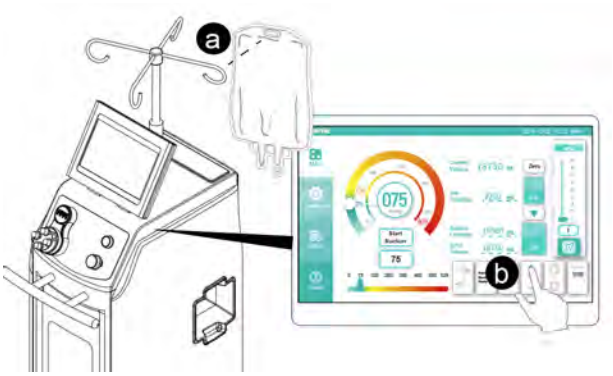

Figure 19 To Use the IV Pole

5. To Use the 4.5-liter Chamber light

a. Tap the Chamber light key to turn on the 4.5-liter Chamber light to illuminating the upper chamber (Figure 20).

b. See the To Operate the Rover section.

Figure 20 To Use 4.5-liter Chamber light

During the Procedure

To Operate the Rover

⚠ WARNINGS：

- HIGH SUCTION DEVICE [MAX = 528 mmHg/ 70kPa]
  - The effectiveness of aspiration is dependent upon the intensity of the vacuum applied.
  - ALWAYS use the minimum suction setting required to achieve the desired clinical outcome.
  - ALWAYS follow your institution's guidelines for suction limits.
  - DO NOT connect directly to chest tubes.
  - DO NOT connect to closed wound drains.
  - DO NOT connect directly to tracheal tubes.
  - NOT FOR USE as a suction source for intermittent suction applications.

  Death or serious injury can result from improper suction levels.

- The canister scale and fluid volume display are not diagnostic tools. DO NOT use the scale or fluid volume display to determine the amount of fluid lost from or retained by the patient.
- ALWAYS make sure rover power is ON when collecting fluid waste. The rover can only detect full canister if the rover is ON. If the rover is OFF, biohazard waste leakage or loss of suction can occur.
- The suction setting may only be adjusted by the SUCTION SETTING on the user interface. Interruption and restoration of rover power, whether accidental or intentional, does not reset the suction setting to zero.
- LOW SUCTION HAZARD

  NOT FOR USE as a suction source for the following applications:

  - Organ stabilizer/positioner devices
  - Patient positioner devices

  Death or serious injury can result from fluctuating suction levels.

NOTES:

- This equipment provides an adjustable suction limit of 37 to 528 mmHg/5 to 70kPa measured with all ports closed.
- Make sure the rover has been prepared for collection properly. See the To Setup the Rover section.

1. To Control Fluid Suction

NOTE: See the High Suction Indicator table for important condition, indication and action information.

a. While viewing the CONTROL screen on the user interface display, tap the SUCTION SETTING key or slide the Suction level gauge to adjust to the desired suction level.

b. Tap the START SUCTION key to start fluid suction.

Figure 21 To Set Suction Level

Figure 22 To Start Fluid Suction

High Suction Indicator

NOTE: The condition, indication and action described in this table pertain to one or both canisters

SUCTION CONDITION	INDICATION	ACTION
HIGH SUCTION LIMIT RANGE; the suction setting selected is at or above 120 mm-Hg/16kPa	one “High vacuum in operation” voice with user interface display flashes “High vacuum in operation”	Confirm whether a high range is desired.

2. To Control Smoke Evacuation

a. Tap the key that appears like a fan on the Touch screen (Figure 23) or depressing and releasing the footswitch (if connected) to start or stop smoke evacuation.

b. Tap the "Smoke Evacuator Power Setting" key to input or use the "Smoke Evacuator Power Setting" bar that located on the top of the fan image to adjust the amount of smoke suction, the motor speed is increased or decreased by 10% as the speed is from 1 (20% of the maximum speed) to 9 (100% of the maximum speed)) (Figure 24). The smoke suction control should be set at the lowest practical setting to completely remove the surgical smoke from the operative site.

Figure 23 To Control Smoke Evacuation

Figure 24 To Adjust Smoke Evacuation

3. To Adjust the IV Pole

Tap and hold the IV pole UP or DOWN arrow keys to raise or lower the pole height, respectively (Figure 25).

Figure 25 To Adjust IV Pole

4. To Open or Close the Chamber access doors

Tap the Upper or Lower Chamber access door keys to open/close the Upper and Lower Chamber access door (Figure 26).

Figure 26 To open or close Upper and Lower Chamber access door

5. To Open or Close the 4.5-liter Chamber light

Tap the Chamber light key to turn on or turn off the 4.5-liter Chamber light (Figure 27).

Figure 27 To turn on or turn off the 4.5-liter Chamber light

6. To Manage Full Canister

NOTE: See the Fluid Volume Indicators table for conditions, indications and actions related to a full or almost full canister.

a. If the 4.5-liter chamber is full, the contents in the 4.5-liter chamber would flows into the 22-liter chamber automatically. Tap the EMPTY 4.5L CANISTER key on the user interface anytime if you want to empty the 4.5-liter chamber (Figure 28).

b. If the 22-liter chamber is full, shutdown the rover for relocation. Dock the rover to empty the full canister. See the To Dock the Rover section.

NOTE: If the 22-liter chamber has insufficient capacity to receive the 4.5-liter chamber fluid, a screen will appear indicating the rover will require shutdown and docking to empty its full canister.

Figure 28 empty 4.5l chamber

NOTES:

The EMPTY 4.5L CHAMBER action will continue until the 22-liter chamber can no longer receive fluid waste or the 4.5-liter chamber is empty.

A maximum of four EMPTY 4.5L CHAMBER cycles are allowed between docking cycles.

The canister will return to their previous suction setting after the EMPTY 4.5L CANISTER action is complete.

Fluid Volume Indicators

FLUID VOLUME CONDITION	INDICATION	ACTION

Lower Chamber is full – The fluid volume level is near full capacity. Fluid suction will soon stop in the full canister.	One “Lower chamber full” voice; the Lower Chamber area flashes “Lower Chamber full”	Prepare to relocate and dock the rover to dispose of waste.
Canister full – The fluid volume level is at full capacity. Fluid suction has stopped in the full canister.	One “Canister full, please dock the Rover” voice; Touch screen flashes “Canister full, please dock the Rover”	Relocate and dock the rover to dispose of waste.

After the Procedure

To Shutdown the Rover

⚠ WARNING：

- BLOODBORNE PATHOGEN HAZARD：
  - ALWAYS wear personal protective equipment (PPE) when operating or handling this equipment.
  - ALWAYS leave tubing attached to the manifold and close unused ports during disposal.
  - ALWAYS follow local regulations regarding proper handling and disposal of biohazard waste.

  Failure to comply may cause infection and result in healthcare staff injury.

1. <u>To Remove Fluid Suction Components</u>

a. With suction active, gather the suction tubing toward the manifold port to purge the tubing of fluid waste. DO NOT remove any attached suction tubing from the manifold (Figure 29).

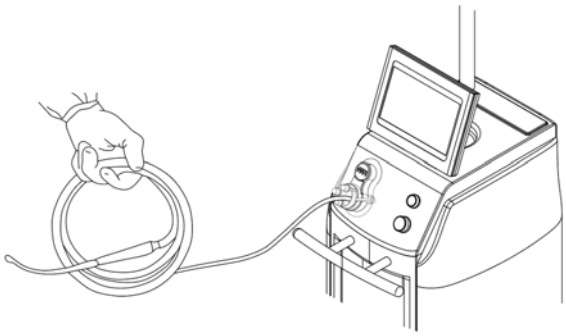

Figure 29 To Gather Suction Tubing

b. Adjust the SUCTION level to zero.

c. Push the “Suction Off/Stop Docking” button on the front panel to stop fluid suction (Figure 30).

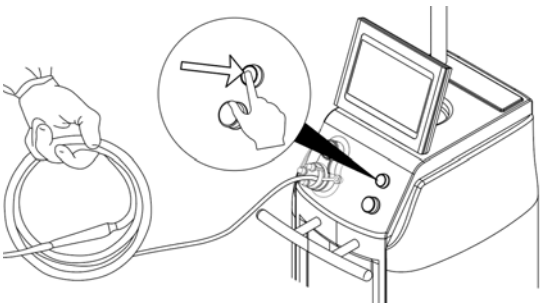

Figure 30 To Shutdown Suction

d. Push the pop the manifold out Button until the manifold is unlocked, then pull the manifold and attached suction tubing out of the receptacle, always keeping the manifold in a horizontal orientation (Figure 31).

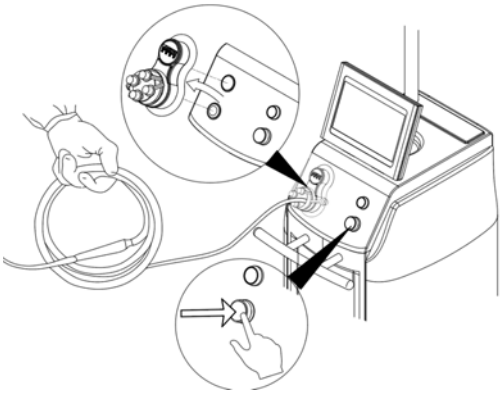

Figure 31 To Release Manifold

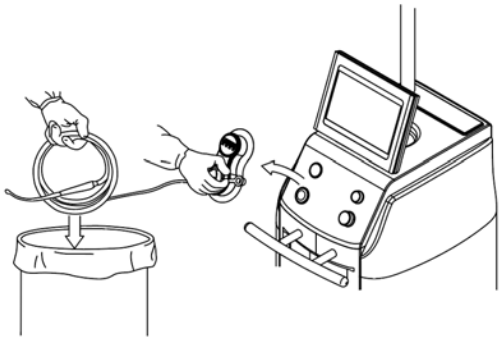

Figure 32 To Remove Manifold and Tubing

e. Properly dispose of the used manifold and attached suction tubing always maintaining the manifold in a horizontal orientation (Figure 32).

f. Remove all the remaining fluid suction accessories as required.

g. Close the Manifold door by tapping the Manifold door left icon on the user interface

2. To Remove Smoke Evacuation Components

a. Tap the key that appears like a fan on the Touch screen or depressing and releasing the footswitch (if connected) to stop smoke evacuation.

b. Remove the smoke evacuator tubing with any attachments.

Figure 33 To R**emo**ve Smoke Evacuation Components.

3. To Remove IV Pole Components

a. Tap the IV POLE DOWN key to lower the IV pole.

b. Remove any irrigation bags on the IV pole as required.

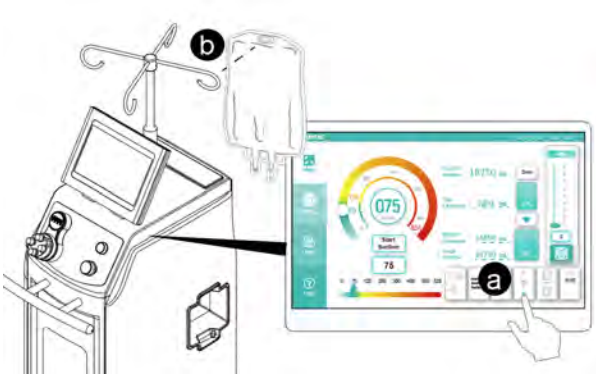

Figure 34 To Remove IV Pole Components

4. To Remove Power

a. Turn off the 4.5-liter chamber light by tapping the 4.5-liter light key on the user interface, if required.

b. Close the chamber access doors by tapping the chamber access door keys on the user interface, if required.

c. Push the power switch to the OFF position.

d. Disconnect the rover from facility electrical power. Wrap the power cord around the cord bracket.

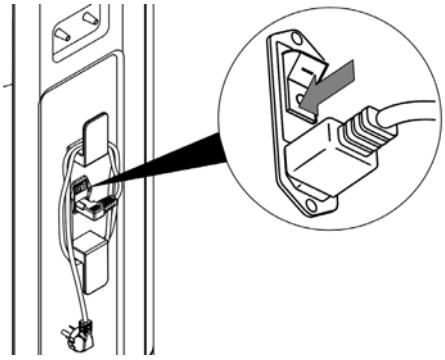

Figure 35 To Remove Power

5. To Prepare for Relocation

NOTE: Before relocation, remove all irrigation bags from the rover. The rover transport configuration is illustrated in Figure 36.

a. ALWAYS wipe down the rover between each surgical use. See the Cleaning section.

b. Unlock the four casters of the rover and relocate the rover as required.

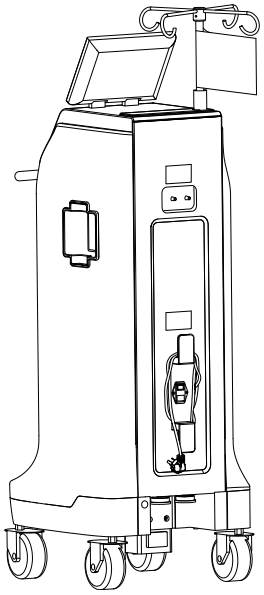

Figure 36 Transport Configuration

6. To Relocate the Rover

a. If both chambers are full or the rover contains fluid waste and will not be used within two hours, relocate the rover to the docker. See the To Dock the Rover section.

b. If the chambers are not full and the rover will be used within two hours, relocate the rover to the desired location. See the To Setup the Rover section.

NOTES:

- Dock the Rover for waste disposal as soon as practical, typically within two hours of the last use, to preclude extended wash cycles.
- The rover does not have to be connected to facility power when not in use.

To Dock the Rover

⚠ WARNINGS：

- ALWAYS keep hands out and away from the mating surfaces of the rover and docker during the docking procedure to avoid a pinch point hazard.
- BLOODBORNE PATHOGEN HAZARD
  - ALWAYS wear personal protective equipment (PPE) when operating or handling this equipment.
  - ALWAYS follow local regulations regarding proper handling and disposal of biohazard waste.
- Failure to comply may cause infection and result in healthcare staff injury.

NOTES:

- Dock the rover for waste disposal as soon as practical, typically within two hours of the last use, to preclude extended wash cycles.
- Before docking the rover, always allow the docker to warm up for at least 60 seconds after applying power to the docker.

- The docker provides power to the rover during the docking process.
- After docking the rover, DO NOT lock the rover casters.

1. To Prepare the Docker

a. Make sure the power switch is in the ON position and illuminated.

b. Make sure the bottle of Detergent has enough detergent to perform a wash cycle.

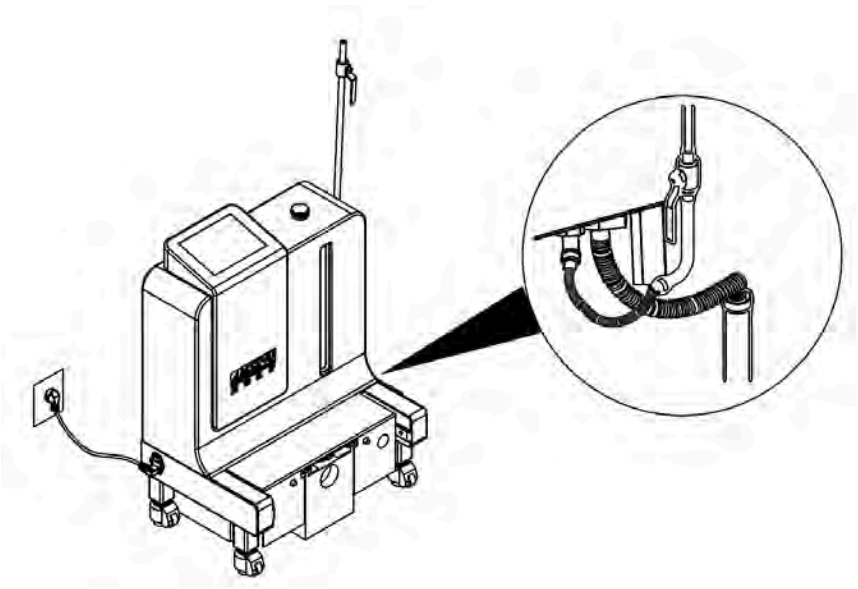

Figure 37 To Prepare the Docker

2. To Perform a Wash Cycle

a. Push the rover toward the docker and between the guides until the rover and docker attach automatically (Figure 38).

b. As the rover and docker attached together, the Wash Cycle View will display automatically and "Docking in place" voice message will be heard. From the Wash Cycle View select a cycle by tapping the related key. For the wash cycle options, refer to the wash cycle options table.

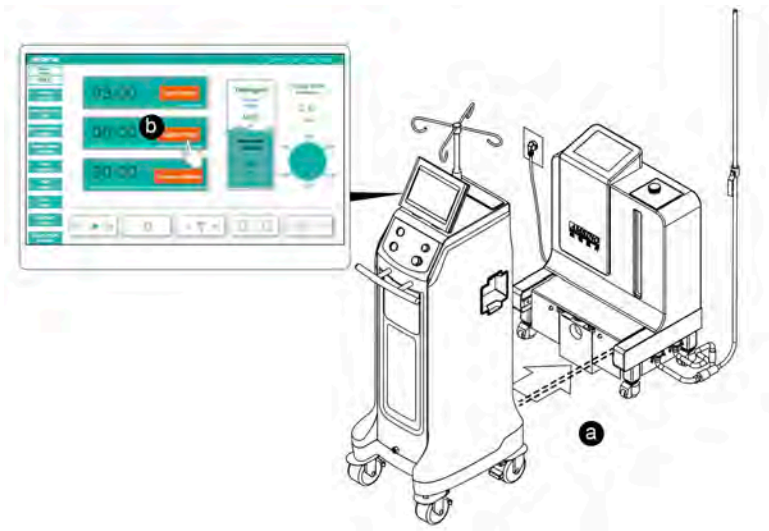

Figure 38 To Perform a Wash Cycle

NOTES:

- During the first rover docking procedure, the information on the user interface display may appear inconsistent. The procedure may also take a few more minutes than specified in the Wash Cycle Options table. Both conditions are normal and temporary.
- If a specific wash cycle is not selected within ten seconds, the “Wash” cycle will be performed automatically. See the Wash Cycle Options table.
- To exit the current wash cycle, push the OFF button to terminate the current a wash cycle and the rover detaches from the docker automatically. Pull the rover away from the docker. And dock again, select the needed wash cycle.

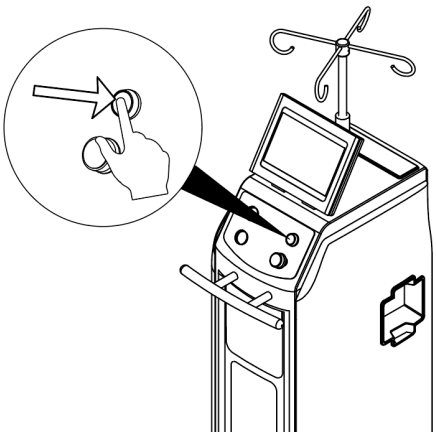

Figure 39 To cease the current wash Cycle

Wash Cycle Options

CYCLES	DESCRIPTION	TIME (approx.)
Wash	Cycle drains the contents, applies detergent to the interior walls of both chambers, and rinses the detergent with water.	6 minutes
Quick Drain	Cycle drains the contents of both chambers.	3 minutes
Extended Wash	Cycle drains the contents, applies detergent to the interior walls of both chambers and rinses the detergent with water. Intermittent periods of soaking occur during the cycle.	50 minutes

c. After the cycle is complete, the rover detaches from the docker automatically. Pull the rover away from the docker.

d. Visually inspect the chambers for any remaining soil. If soil remains, an Extended Wash cycle is available to provide a more thorough cleaning of the chambers.

NOTE: If this is the initial docking of the rover, make sure the rover is tested before use. See the To Test the Rover section.

Inspection and Maintenance

⚠WARNINGS:

- Upon initial receipt and before each use, inspect each component for damage. DO NOT use any

equipment if damage is apparent or the inspection criteria are not met.

- DO NOT disassemble, modify, service, or repair any system component or accessory, unless otherwise specified. Call AMSINO iReceptal Customer Service.

NOTES:

- Only individuals trained and experienced in the maintenance of reusable medical devices should install, inspect, and test this equipment.
- For service, contact your AMSINO sales representative or call AMSINO iReceptal Customer Service. Outside the US, contact your nearest AMSINO subsidiary.
- Maintenance documentation for this equipment is available upon request to AMSINO-authorized service personnel only.

INTERVAL	INSPECTION CRITERIA	ACTION
Before initial use	Check equipment for damage or missing components and for proper operation.	If damage is apparent, replace the equipment. See the Accessories section.
	Make sure the rover and docker operate as a system properly.	See the following sections: To Dock the Rover, To Test the Rover, and To Adjust the Rover Settings.
Before each use and after each cleaning	Check equipment for damage or missing components.	If damage is apparent, replace the equipment. See the Accessories section.
	Check for cleaning induced damage or unacceptable deterioration on all external surfaces of the rover, such as corrosion, discoloration, pitting, or cracked materials.	
	Check the canister and smoke evacuator filter cover, for cracks or damage.	
	Check the four casters with locks and make sure the locks function properly.	
	Check the power cord for cuts and the power cord plug for bent pins.	
	Check the power cord receptacle for bent pins or bent contacts.	
Six months	Check the replacement date on the smoke evacuator filter label. The smoke evacuator filter life is 80 hours.	Replace the smoke evacuator filter every six months or as indicated on the user interface display. See the Accessories section.

NOTE: If any component must be discarded, see the Disposal/Recycle section.

Cleaning

⚠ WARNING： ALWAYS clean the equipment as indicated upon initial receipt and before each use. Failure to comply may cause infection and result in patient or healthcare staff injury.

CAUTIONS:

- DO NOT immerse any system component in liquid. DO NOT allow liquids or moisture to enter any electrical connection.
- DO NOT sterilize any system component.
- DO NOT use solvents, lubricants, or other chemicals, including glutaraldehyde or similar chemical cleaners, unless otherwise specified.
- Use of unapproved disinfectants may cause system damage.

Recommended Equipment

- Personal Protective Equipment (PPE) as recommended by the disinfectant supplier (minimum: gown, gloves, face/eye shield)
- Soft, lint-free cloth
- Environmental Protection Agency (EPA) registered disinfectant with a claim for activity against Hepatitis B. The following disinfectants have been validated for use with the AMSINO iReceptal 3 Waste Management System:
  - Sodium Hypochlorite Based - Clorox Clean-Up. Disinfectant Cleaner with Bleach (EPA Reg. #67619-1)
  - Quaternary Ammonium Based - CaviCide (EPA Reg. #46781-6)

To Wipe Down the Rover

1. Wipe the external surfaces of the rover with a soft, lint-free cloth moistened with a non-abrasive, hospital disinfectant prepared according to the manufacturer's instructions. Clean surfaces until all visible soil is removed.
2. Wipe critical areas such as the handle, user interface, manifold port, and any other areas that may have become soiled. Including the infrared communication window.

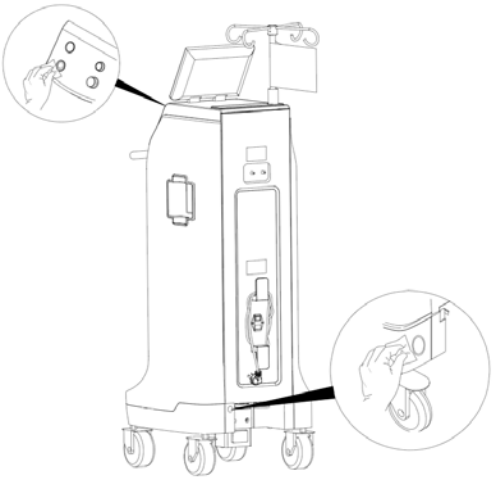

Figure 40 To wipe down the rover

3. Using a clean cloth moistened with disinfectant, wipe all surfaces. Make sure all surfaces remain visibly wet at room temperature for at least the minimum time specified in the instructions supplied by the disinfectant manufacturer.

4. Remove any excess disinfectant solution using a soft, lint-free cloth moistened with water if required by the instructions supplied by the disinfectant manufacturer.

5. Inspect the rover. See the Inspection and Maintenance section.

6. If the rover will be used again, use the rover handle to Tap and relocate the rover. See the To Setup the Rover section. If the rover will no longer be used, use the rover handle to Tap and relocate the rover to a storage area.

Storage and Handling

CAUTIONS：

- ALWAYS store and transport the equipment within the specified environmental condition values throughout its useful life. See the Specifications section.
- ALWAYS call AMSINO iReceptal 3 Customer Service before transporting or storing this equipment in freezing conditions. Failure to comply will cause the expansion of frozen internal fluid to damage the equipment.

To ensure the longevity, performance and safety of this equipment, use of the original packaging material is recommended when storing or transporting this equipment.

Disposal/Recycle

⚠ WARNINGS：

BLOODBORNE PATHOGEN AND CONTAMINATION HAZARDS

- ALWAYS follow local regulations for safe handling, recycling, and disposal of biohazardous fluid waste and iReceptal digital surgical suction equipment.

- Call AMSINO iReceptal 3 Customer Service for rover decontamination procedures.
- Discarded electromedical equipment must not be disposed together with waste but must be collected separately to guarantee ecologically correct disposal to prevent dispersion of potential pollutants into the environment. Please hand in the device at the end of its useful life to the local collection and recycling point for electrical and electronic devices.

Failure to comply may cause environmental contamination or infection and result in personal injury.

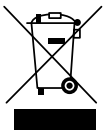

Per the European Community (EC) Waste Electrical and Electronic Equipment (WEEE) Directive 2012/19/EU, product must be collected separately. DO NOT dispose of as unsorted municipal waste. Contact local distributor for disposal information.

Troubleshooting

NOTE: For service, contact your AMSINO sales representative or call AMSINO iReceptal Customer Service. Outside the US, contact your nearest Stryker subsidiary.

PROBLEM	POTENTIAL CAUSE	CORRECTIVE ACTION
Rover Operation		
The rover does not power up and the power switch is in the ON position.	Power cord is not connected or is not connected securely.	Connect the power cord or make sure the power cord is connected securely.
No vacuum pump action after the SUCTION key is Taped.	Canister is full and an error occurs.	Dock the rover.
	Solid or liquid material has entered the vacuum pump.	Remove the rover from use. Contact AMSINO iReceptal Customer Service.
	An internal fuse is blown.	Remove the rover from use. Contact AMSINO iReceptal Customer Service.
The rover's fluid suction is weak or insufficient.	Manifold is not installed correctly.	Insert the manifold to make sure it is locked in place.
	Unused manifold ports are open.	Close all unused manifold ports of each canister.
	Suction tubing connection is not secure.	Make sure all suction tubing connections are secure.
	Unused suction tubing is not clamped.	Clamp any suction tubing not in use.
	Suction tubing is blocked or damaged.	Clear or replace the suction tubing.
	Suction accessory is blocked or damaged.	Clear or replace the suction accessory.
	Suction tubing is too long or has a narrow diameter.	Use shorter length or larger diameter suction tubing.
	Manifold is damaged.	Replace the manifold. See the Accessories section. See the

		instructions for use supplied with the manifold.
	The SUCTION SETTING are too low.	Adjust the SUCTION SETTING .
	The vacuum pump or internal sensor is damaged.	Remove the rover from use. Contact AMSINO iReceptal Customer Service.
The rover's suction capability is lost.	The vacuum pump is damaged.	Remove the rover from use. Contact AMSINO iReceptal Customer Service.
A filter error appears on the user interface display.	The smoke evacuator filter has exceeded its useful life.	Replace the smoke evacuator filter. See the Accessories section. See the instructions for use supplied with the filter.
The rover is releasing a strong odor.	The smoke evacuator filter has exceeded its useful life.	Replace the smoke evacuator filter. See the Accessories section. See the instructions for use supplied with the filter.
The smoke evacuator fails to operate after activation (EVACUATE SMOKE key is Taped).	The smoke evacuator is damaged.	Remove the rover from use. Contact AMSINO iReceptal Customer Service.
A smoke evacuator error appears on the user interface display.		
	The smoke evacuator filter is not installed.	Install the smoke evacuator filter. See the instructions for use supplied with filter.
	The smoke evacuator filter is installed incorrectly.	Install the smoke evacuator filter again. See the instructions for use supplied with filter.
	The smoke evacuator is damaged.	Remove the rover from use. Contact AMSINO iReceptal Customer Service.
IV pole height cannot be adjusted to its maximum height.	IV pole is supporting too much weight.	Remove excessive weight from IV pole.
	The IV pole is bent, kinked, or pinched.	Remove the rover from use. Contact AMSINO iReceptal Customer Service.
Fluid does not drain from the 5-liter chamber into the 25-liter chamber after Taping the EMPTY 4.5L CHAMBER key.	A fluid waste clog exists at the bottom of the 4.5-liter chamber.	Remove the rover from use. Close all used and unused manifold ports. Turn both SUCTION SETTING dials to the maximum value. Tap the SUCTION key. Tap the EMPTY 4L CHAMBER key. Contact AMSINO iReceptal

		Customer Service if the clog persists.
An error occurs during EMPTY 4.5L CHAMBER procedure.	More than four EMPTY 4.5L CHAMBER procedures have been attempted.	Dock the rover.
	The contents of the 4.5-liter chamber cannot fit into the 25-liter chamber.	Dock the rover.
Sporadic electrical interference is experienced.	Electrical noise is present.	Turn off all the electrical equipment not in use in the room.
		Relocate the electrical equipment to maximize the distance between the equipment. Increase spatial distance.
		Plug equipment into different outlets.

PROBLEM	POTENTIAL CAUSE	CORRECTIVE ACTION
Docking Operation		
The rover will not dock or an error has occurred during docking.	The docker power cord is not connected or is loosely connected.	Make sure the docker power cord is connected securely.
	The docker power switch is in the OFF position.	Make sure the power switch is in the ON position and illuminated. If power switch is OFF, Tap the power switch to the ON position. Wait 60 seconds. Dock the rover.
	The docker power switch is in the ON position, but not illuminated.	Make sure facility power is provided to the wall receptacle. If facility power is OFF, apply facility power to the docker. Wait 60 seconds. Dock the rover.
	The docker is not receiving facility water.	Make sure the water inlet hose is connected correctly. Make sure the facility water supply valve is open. Dock the rover.
	The docker requires a power reset.	Remove power, then apply power to the docker. Wait 60 seconds. Dock the rover.
	If the problem persists, the docker may be damaged.	Contact AMSINO iReceptal Customer Service.
The docker does not dispense detergent during the cleaning cycle.	The bottle of detergent is empty.	Replace the bottle of the detergent. See the Accessories section.
	If the problem persists, the docker may be damaged.	Contact AMSINO iReceptal Customer Service.
An error occurs while the rover is	The fluid connectors prevent the	Remove power, apply power to

docked and the rover cannot be removed from the docker.	removal of the rover from the docker.	the docker. Wait 10 seconds. Pull the rover away from the docker. Wait 60 seconds. Dock the rover.
	If the problem persists, the fluid connectors may be damaged.	Contact AMSINO iReceptal Customer Service.
The rover cannot be removed from docker.	The four casters are locked.	Make sure the four casters are unlocked. The casters do not need to be locked when the rover is docked. Pull the rover away from the docker.

Error Messages

NOTE: For service, contact your AMSINO sales representative or call AMSINO iReceptal Customer Service. Outside the US, contact your nearest Stryker subsidiary.

Error Message	ACTION
VACUUM PUMP ERROR	CALL SERVICE
SMOKE EVAC ERROR	CALL SERVICE
LEVEL SENSOR OF UPPER CHAMBER OR VALVE BETWEEN CHAMBER ERROR	CALL SERVICE
AIR PUMP, SOLENOID VALVE, ERROR	CALL SERVICE
WATER PUMP OR LEVEL SENSOR OF LOWER CHAMBER ERROR	CALL SERVICE
DETERGENT PUMP ERROR	CALL SERVICE
SMOKE FILTER EXPIRED	REPLACE SMOKE FILTER
NO SMOKE FILTER DETECTED	SMOKE FILTER NOT DETECTED - REPLACE SMOKE FILTER

Specifications

TABLE 1. Rover specifications

REF	iRR301-01	iRR302-01
Electrical Power Requirements:	100-120V~, 50/60 Hz, 8 A, single phase 24 V ⎓, 3 A during docking procedure; rover receives power from docker REF iRD301-01	220-240V~, 50/60 Hz, 4.5 A, single phase 24 V ⎓, 3 A during docking procedure; rover receives power from docker REF iRD302-01
Power inlet module	Power switch with 250V fuses on neutral and line connection	Power switch with 250V fuses on neutral and line connection
European Conformity:		CE
Product Safety Certification:	IEC 60601-1:2005, IEC 60601-1:2005/AMD1:2012 Medical electrical equipment – Part 1: General requirements for basic safety and essential performance IEC 60601-1-2:2014 Collateral Standard: Electromagnetic disturbances – Requirements and tests IEC 60601-1-6:2010, IEC 60601-1-6:2010/AMD1:2013 Collateral Standard: Usability EN ISO 10079-3:2014 Medical suction equipment – Part 3: Suction equipment powered from a vacuum or positive gas source	EU Medical Device Directive 93/42/EEC and Directive 2007/47/EC IEC 60601-1:2005, IEC 60601-1:2005/AMD1:2012 Medical electrical equipment – Part 1: General requirements for basic safety and essential performance IEC 60601-1-2:2014 Collateral Standard: Electromagnetic disturbances – Requirements and tests IEC 60601-1-6:2010, IEC 60601-1-6:2010/AMD1:2013 Collateral Standard: Usability EN ISO 10079-3:2014 Medical suction equipment – Part 3: Suction equipment powered from a vacuum or positive gas source RoHs directive 2011/65/EU
Dimensions	Width：49.7cm Height：254cm (with IV pole up)；153.8cm (with IV pole down) Depth：66.5cm	
Mode of Operation	Continuous	
Volume	26.5 -liter capacity（combination of 4.5-liter and 22-liter chambers）	
Mass	97.85kg —collection empty 127.85kg —collection full	
Ingress Protection (IP):	IPX0	
Equipment Type:	Type CF Applied Part	
Equipment Classification:	Class I Medical Electrical (ME) Equipment	

Pollution Degree	2
Environmental Conditions:	Operation： Temperature Limitation：10℃ ~ 40 ℃ Humidity Limitation： 30% ~ 75% Atmospheric Pressure Limitation:：70kPa ~ 106kPa Storage and Transportation (before initial use)： Temperature Limitation：-20℃ ~ 40 ℃ Humidity Limitation： 10% ~ 75% Atmospheric Pressure Limitation：50kPa ~ 106kPa Storage and Transportation (after initial use)： Temperature Limitation：10℃ ~ 40 ℃ Humidity Limitation： 10% ~ 75% Atmospheric Pressure Limitation：50kPa ~ 106kPa
Installation location	< 3,000 m above sea level. Usage not allowed in oxygen-rich or explosion- hazard environment.
IV Pole Capacity:	12,000 mL or 3000 mL per IV pole hook; for example four three-liter (3000 mL) IV bags
Light Emitting Diode (LED) Classification (infrared communication windows):	WARNING: INVISIBLE LED RADIATION DO NOT VIEW DIRECTLY WITH OPTICAL INSTRUMENTS CLASS 1M LED PRODUCT — Viewing the laser output with certain optical instruments (for example, eye loupes, magnifiers and microscopes) within a distance of 100 mm may pose an eye hazard.
Ground Type:	Protective Earth (ground); when connected to facility power
Suction	
Suction Limit range	37 to 528 mmHg at 1 mmHg increments；measured with all ports closed 5-70 kPa at 1 kPa increments；measured with all ports closed
Suction Tube Connection	Inner diameter：>6.4mm
Suction performance category	High vacuum/high flow
Vacuum Measurement range	0-80kpa
Vacuum Measurement Accuracy:	± 5% of full scale
Display resolution	1kPa/1mmHg. Suction level gauge
Fluid collection	
Display range	upper chamber 0 …5,000mL lower chamber 0 … 25,000mL total volume 0 … 30,000mL
Measurement accuracy	4.5L, ±50ml 22L, ±150ml NOTE: Volume measurements specified do not account for fluid evaporation or an inclined plane of operation that exceeds the specified range.

Smoke evacuation	
Maximum Smoke Evacuator Flow Setting	Standard Hose I.D. Flow Rates 22mm (7/8''). 707LPM (25CFM) 9.5mm (3/8''). 130LPM (4.6CFM) 6.4mm (1/4''). 60LPM (2.1CFM) NOTE: The specified flow rates were obtained using smoke tubing with a 1.8m length. Actual flow rates may vary depending on the length and diameter of the smoke tubing used.
Smoke evacuation tube connection	6.4mm, 9.5mm, 22mm
RFID	
Operating frequency range	13.56MHz
Channels	
Channel separation	
Rated maximum peak power	
Modulation	
FCCID	
IC	

TABLE 2. Consumables specifications

Single-patient manifold	
Shelf life	2 years from manufacturing
Storage Conditions	Keep dry, Keep away from sunlight
ULPA filter	
Shelf life	2 years from manufacturing
Storage Conditions	Keep dry, Keep away from sunlight

Electromagnetic Compatibility

Guidance and manufacturer's declaration - electromagnetic emissions		
The iReceptal 3 Rovers, REF iRR301-01 iRR302-01, is intended for use in the electromagnetic environment specified below. The customer or the user of the iReceptal 3 Rovers, REF iRR301-01 iRR302-01 and, should assure that it is used in such an environment.		
Emissions test	Compliance	Electromagnetic environment - guidance
RF emissions CISPR 11	Group 1	The Rovers, REF iRR301 and REF iRR302, use RF energy only for its internal function. Therefore, its RF emissions are very low and are not likely to cause any interference in nearby electronic equipment.
RF emissions CISPR 11	Class A	The IReceptal 3 Rovers, REF iRR301 and REF iRR302, are suitable for use in all establishments other than domestic, and may be used in domestic establishments and those directly connected to the public low-voltage power supply network that supplies buildings used for domestic purposes, provided the following warning is heeded: WARNING: This equipment/system is intended for use by healthcare professionals only. This equipment/ system may cause radio interference or may disrupt the operation of nearby equipment. It may be necessary to take mitigation measures, such as reorienting or relocating the IReceptal 3 Rovers, REF iRR301 and REF iRR302, or shielding the location.
Harmonic emissions IEC 61000-3-2	Class A	
Voltage fluctuations/flicker emissions IEC 61000-3-3	Complies	

Guidance and manufacturer's declaration - electromagnetic immunity			
The IReceptal 3 Rovers, REF iRR301-01 iRR302-01, are intended for use in the electromagnetic environment specified below. The customer or the user of the IReceptal 3 Rovers, REF iRR301-01 iRR302-01, should assure that it is used in such an environment.			
Immunity test	IEC 60601 test level	Compliance level	Electromagnetic environment - guidance
Electrostatic discharge（ESD）IEC 61000-4-2	±6 kv contact ±8 kv air	±6 kv contact ±8 kv air	Floors should be wood, concrete or ceramic tile. If floors are covered with synthetic material, the relative humidity should be at least 30%.
Electrical fast transient/burst IEC 61000-4-4	±2 kv for power supply Lines ±1kVfor input/output lines	±2 kv for power supply Lines ±1kVfor input/output lines	Mains power quality should be that of a typical commercial or hospital environment.
Surge IEC 61000-4-5	±1 kv line(s) to line(s) ±2 kv line(s) to earth	±1 kv line(s) to line(s) ±2 kv line(s) to earth	Mains power quality should be that of a typical commercial or hospital environment.
Voltage dips, short interruptions and voltage	<5% U_T (>95% dip in U_T) for 0.5 cycle	<5% U_T (>95% dip in U_T) for 0.5 cycle	Mains power quality should be that of a typical commercial or hospital environment. If the user of the IReceptal 3

variations on power supply input lines IEC 61000-4-11	40% U_T (60% dip in U_T) for 5 cycles 70% U_T (30% dip in U_T) for 25 cycles <5% U_T (>95% dip in U_T) for 5 s	40% U_T (60% dip in U_T) for 5 cycles 70% U_T (30% dip in U_T) for 25 cycles <5% U_T (>95% dip in U_T) for 5	Rovers, REF iRR301-01 iRR302-01, requires continued operation during power mains interruptions, it is recommended that the IReceptal 3 Rovers, iRR301-01 iRR302-01, be powered from an uninterruptible power supply or a battery.
Power frequency (50/60 Hz) magnetic field IEC 61000-4-8	3 A / m	3 A/m	Power frequency magnetic fields should be at levels characteristics of a typical location in a typical commercial or hospital environment.
Conducted RF IEC 61000-4-6 Radiated RF IEC 61000-4-3	3 Vrms 150 khz to 80 MHz 3 V / m 80 MHz to 2.5 GHz	3 V 3 V/m	Portable and mobile RF communications equipment should be used no closer to any part of the IReceptal 3 Rovers, iRR301-01 iRR302-01, including cables, than the recommended separation distance calculated from the equation applicable to the frequency of the transmitter. Recommended separation distance $d=1.2\sqrt{P}$ 150 kHz to 80 MHz $d=1.2\sqrt{P}$ 80 MHz to 800 MHz $d=2.3\sqrt{P}$ 800 MHz to 2.5 GHz where P is the maximum output power rating of the transmitter in watts (W) according to the transmitter manufacturer and d is the recommended separation distance in metres (m). Field strengths from fixed RF transmitters, as determined by an electromagnetic site survey[a] should be less than the compliance level in each frequency range[b]. Interference may occur in the vicinity of equipment marked with the following symbol ： (Non-ionizing eletromagnetic radiation)
NOTE 1: At 80 MHz and 800 MHz the higher frequency range applies. NOTE 2: These guidelines may not apply in all situations. Electromagnetic propagation is affected by absorption and reflection from structures, objects and people.			
[a] Field strengths from fixed transmitters, such as base stations for radio (cellular/cordless) telephones and land mobile radios, amateur radio, AM and FM radio broadcast and TV broadcast cannot be predicted theoretically with accuracy. To			

assess the electromagnetic environment due to fixed RF transmitters, an electromagnetic site survey should be considered. If the measured field strength in the location in which the IReceptal 3 Rovers, iRR301-01 iRR302-01, are used exceeds the applicable RF compliance level above, the IReceptal 3 Rovers, iRR301-01 iRR302-01, should be observed to verify normal operation. If abnormal performance is observed, additional measures may be necessary, such as re-orienting or relocating the IReceptal 3 Rovers, iRR301-01 iRR302-01.

[b] Over the frequency range 150 kHz to 80 MHz, field strengths should be less than 3 V/m.

Recommended separation distances between portable and mobile RF communications equipment and the IReceptal 3 Rovers, REF iRR301-01 iRR302-01			
The IReceptal 3 Rovers, REF iRR301-01 iRR302-01, are intended for use in an electromagnetic environment in which radiated RF disturbances are controlled. The customer or the user of the IReceptal 3 Rovers, iRR301-01 iRR302-01, can help prevent electromagnetic interference by maintaining a minimum distance between portable and mobile RF communications equipment (transmitters) and the IReceptal 3 Rovers, iRR301-01 iRR302-01, as recommended below, according to the maximum output power of the communications equipment			
Rated maximum output power of transmitter W	Separation distance according to frequency of transmitter m		
	50 khz 至 80 MHz d = 1.2 P	80 MHz 至 800 MHz d = 1.2 P	800 MHz 至 2.5 GHz d = 2.3 P
0.01	0.12	0.12	0.23
0.1	0.38	0.38	0.73
1	1.2	1.2	2.3
10	3.8	3.8	7.3
100	12	12	23
For transmitters rated at a maximum output power not listed above, the recommended separation distance d in meters (m) can be estimated using the equation applicable to the frequency of the transmitter, where P is the maximum output power rating of the transmitter in watts (W) according to the transmitter manufacturer. NOTE 1: At 80 MHz and 800 MHz, the separation distance for the higher frequency range applies. NOTE 2: These guidelines may not apply in all situations. Electromagnetic propagation is affected by absorption and reflection from structures, objects and people.			

Appendix

To Use Auxiliary Suction Ports (optional)

The auxiliary suction ports allow connection to a hospital wall suction regulator if an alternate suction source is required.

⚠ WARNINGS：

- The rover CAN regulate hospital wall suction. ALWAYS use a hospital wall suction regulator to first control suction level and use the rover to second control and monitor suction level when using the auxiliary suction ports. Failure to comply could result in serious injury or death.
- ALWAYS make sure rover power is ON when collecting fluid waste. The rover can only detect full chambers if the rover is ON. If the rover is OFF, biohazard waste leakage or loss of suction can occur.

NOTES:

- The rover is equipped with two auxiliary suction ports. Connecting both auxiliary ports of a canister to the hospital wall suction regulator will increase airflow and improve suction performance compared to connecting only one auxiliary port of a canister.
- If the ports are used, electrical power must be applied to the rover. The rover will regulate the vacuum level and will display vacuum and volume values and provide an audible indication if the canister fluid level exceeds its pre-defined limit.
- Applying maximum suction up to 760 mmHg will not damage the rover.

1. Verify the rover is connected to facility power and Push the power switch to the ON position (Figure 41).

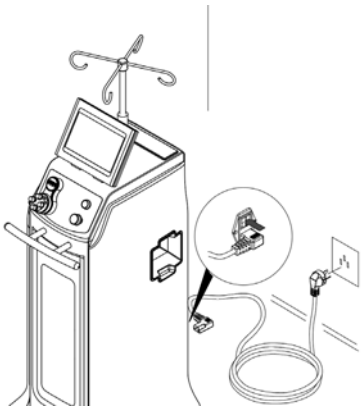

Figure 41 To Connect Power

2. Read the WARNING message on the user interface display, then Tap OK key to access the CONTROL screen (Figure 42).

Figure 42 High Suction Device Warning

3. Install a new disposable manifold into the manifold socket. Make sure the manifold is fully inserted and locked into place.

4. Attach suction tubing between the hospital wall suction regulator and the auxiliary suction ports on the rover (Figure 43).

5. Apply and regulate the suction level provided to the rover from the hospital wall suction regulator.

6. Tap the “Auxiliary Suction Port” on the touch screen to have the rover to second control the suction level (Figure 43).

7. Regulate and monitor suction level.

8. Pressing the Stop Suction button below the touch screen to stop Auxiliary Suction.

Figure 43 To Connect Auxiliary Suction Ports and start Auxiliary suction