S T S L A B

# RADIO TEST REPORT

Report No.: STS2011199W01

Issued for

Network Smartware Inc

830, Hillview Court, Suite 270 Milpitas, CA 95035

| | |
|---|---|
| **Product Name:** | Netsmart Router |
| **Brand Name:** | Network Smartware |
| **Model Name:** | NSAC1200RZ |
| **Series Model:** | N/A |
| **FCC ID:** | 2AYKCNSAC1200RZ |
| **Test Standard:** | FCC Part 15.247 |

Any reproduction of this document must be done in full. No single part of this document may be reproduced without permission from STS, all test data presented in this report is only applicable to presented test sample.

Shenzhen STS Test Services Co., Ltd.
A 1/F, Building B, Zhuoke Science Park, No.190 Chongqing Road, HepingShequ,
Fuyong Sub-District, Bao'an District, Shenzhen, Guang Dong, China
TEL: +86-755 3688 6288 FAX: +86-755 3688 6277 E-mail:sts@stsapp.com

# TEST RESULT CERTIFICATION

**Applicant's Name** ..... : Network Smartware Inc

Address ..... : 830, Hillview Court, Suite 270 Milpitas, CA 95035

**Manufacturer's Name**..... : JLZTLink Industry (Shen Zhen) Co.,Ltd

Address ..... : 401, Building D, SanweiHongwan Industrial Park next to Baoan Avenue, Gushu Community, Xixiang, Sanwei Community, Hangcheng Street, Baoan District, Shenzhen, Guangdong

**Product Description**

Product Name ..... : Netsmart Router

Brand Name ..... : Network Smartware

Model Name..... : NSAC1200RZ

Series Model ..... : N/A

**Test Standards** ..... : FCC Part15.247

Test Procedure.....: ANSI C63.10-2013

This device described above has been tested by STS, the test results show that the equipment under test (EUT) is in compliance with the FCC requirements. And it is applicable only to the tested sample identified in the report.
This report shall not be reproduced except in full, without the written approval of STS, this document only be altered or revised by STS, personal only, and shall be noted in the revision of the document.

**Date of Test**..... :

Date of receipt of test item..... : 30 Nov. 2020

Date (s) of performance of tests..... : 30 Nov. 2020 ~ 28 Dec. 2020

Date of Issue ..... : 28 Dec. 2020

Test Result ..... : **Pass**

Testing Engineer : Chris Chen

(Chris Chen)

Technical Manager : Sean She

(Sean she)

Authorized Signatory : Vita Li

(Vita Li)

Table of Contents Page


**1. SUMMARY OF TEST RESULTS 6**

1.1 TEST FACTORY 7

1.2 MEASUREMENT UNCERTAINTY 7

**2. GENERAL INFORMATION 8**

2.1 GENERAL DESCRIPTION OF THE EUT 8

2.2 DESCRIPTION OF THE TEST MODES 10

2.3 TEST SOFTWARE AND POWER LEVEL 11

2.4 BLOCK DIAGRAM SHOWING THE CONFIGURATION OF SYSTEM TESTED 11

2.5 DESCRIPTION OF NECESSARY ACCESSORIES AND SUPPORT UNITS 12

2.6 EQUIPMENTS LIST FOR ALL TEST ITEMS 13

**3. EMC EMISSION TEST 15**

3.1 CONDUCTED EMISSION MEASUREMENT 15

3.2 RADIATED EMISSION MEASUREMENT 19

**4. CONDUCTED SPURIOUS & BAND EDGE EMISSION 31**

4.1 LIMIT 31

4.2 TEST PROCEDURE 31

4.3 DEVIATION FROM STANDARD 31

4.4 TEST SETUP 31

4.5 EUT OPERATION CONDITIONS 31

4.6 TEST RESULTS 32

**5. POWER SPECTRAL DENSITY TEST 64**

5.1 LIMIT 64

5.2 TEST PROCEDURE 64

5.3 DEVIATION FROM STANDARD 64

5.4 TEST SETUP 64

5.5 EUT OPERATION CONDITIONS 64

5.6 TEST RESULTS 65

**6. BANDWIDTH TEST 81**

6.1 LIMIT 81

6.2 TEST PROCEDURE 81

6.3 DEVIATION FROM STANDARD 81

6.4 TEST SETUP 81

6.5 EUT OPERATION CONDITIONS 81

**Table of Contents** **Page**


6.6 TEST RESULTS 82

**7. PEAK OUTPUT POWER TEST 98**

7.1 LIMIT 98

7.2 TEST PROCEDURE 98

7.3 DEVIATION FROM STANDARD 98

7.4 TEST SETUP 98

7.5 EUT OPERATION CONDITIONS 98

7.6 TEST RESULTS 99

**8. ANTENNA REQUIREMENT 101**

8.1 STANDARD REQUIREMENT 101

8.2 EUT ANTENNA 101

**APPENDIX-PHOTOS OF TEST SETUP 102**

## Revision History

| Rev. | Issue Date | Report No. | Effect Page | Contents |
|---|---|---|---|---|
| 00 | 28 Dec. 2020 | STS2011199W01 | ALL | Initial Issue |
| | | | | |

# 1. SUMMARY OF TEST RESULTS

Test procedures according to the technical standards:
KDB 558074 D01 15.247 Meas Guidance v05r02.

| FCC Part 15.247,Subpart C | | | |
|---|---|---|---|
| Standard Section | Test Item | Judgment | Remark |
| 15.207 | Conducted Emission | PASS | -- |
| 15.247 (a)(2) | 6dB Bandwidth | PASS | -- |
| 15.247 (b)(3) | Output Power | PASS | -- |
| 15.209 | Radiated Spurious Emission | PASS | -- |
| 15.247 (d) | Conducted Spurious & Band Edge Emission | PASS | -- |
| 15.247 (e) | Power Spectral Density | PASS | -- |
| 15.205 | Restricted Band Edge Emission | PASS | -- |
| Part 15.247(d)/ Part 15.209(a) | Band Edge Emission | PASS | -- |
| 15.203 | Antenna Requirement | PASS | -- |

NOTE:

(1) 'N/A' denotes test is not applicable in this Test Report.

(2) All tests are according to ANSI C63.10-2013.

## 1.1 TEST FACTORY

SHENZHEN STS TEST SERVICES CO., LTD
Add. : A 1/F, Building B, Zhuoke Science Park, No.190 Chongqing Road, HepingShequ, Fuyong Sub-District, Bao'an District, Shenzhen, Guang Dong, China

FCC test Firm Registration Number: 625569

IC test Firm Registration Number: 12108A

A2LA Certificate No.: 4338.01

## 1.2 MEASUREMENT UNCERTAINTY

The reported uncertainty of measurement y ±U, where expended uncertainty U is based on a standard uncertainty multiplied by a coverage factor of k=2, providing a level of confidence of approximately 95 %.

| No. | Item | Uncertainty |
|---|---|---|
| 1 | RF output power, conducted | ±0.68dB |
| 2 | Unwanted Emissions, conducted | ±2.988dB |
| 3 | All emissions, radiated 30-1GHz | ±4.39dB |
| 4 | All emissions, radiated 1G-6GHz | ±5.10dB |
| 5 | All emissions, radiated>6G | ±5.48dB |
| 6 | Conducted Emission (9KHz-150KHz) | ±2.79dB |
| 7 | Conducted Emission (150KHz-30MHz) | ±2.80dB |

# 2. GENERAL INFORMATION

## 2.1 GENERAL DESCRIPTION OF THE EUT

| | |
|---|---|
| Product Name | Netsmart Router |
| Trade Name | Network Smartware |
| Model Name | NSAC1200RZ |
| Series Model | N/A |
| Model Difference | N/A |
| Product Description | The EUT is a Netsmart Router<br>Operation Frequency: 802.11b/g/n 20: 2412~2462 MHz<br>802.11n(40MHz):2422~2452MHz<br>Modulation Type: 802.11b(DSSS):CCK,DQPSK,DBPSK<br>802.11g(OFDM):BPSK,QPSK,16-QAM,64-QAM<br>802.11n(OFDM):BPSK,QPSK,16-QAM,64-QAM<br>Number of Channel: 802.11b/g/n20: 11CH<br>802.11n 40: 7CH<br>Antenna Designation: Integral<br>Antenna Gain(dBi): Antenna number: 2<br>ANT 1 gain : 5dBi<br>ANT 2 gain : 5dBi<br>MIMO technology Directional gain=8.01dBi<br>Please refer to the Note 3.<br>Duty Cycle: >98% |
| Channel List | Please refer to the Note 2. |
| Adapter | Input: AC~100-240V AC, 50/60Hz<br>Output: DC 12V_1A |
| Hardware version number | V1.2 |
| Software versionnumber | OpenWrt 19.07-SNAPSHOT r11130-a7f0a72 / LuCI openwrt-19.07 branch git-20.313.59566-7460e9d |
| Connecting I/O Port(s) | Please refer to the Note 1. |

802.11b/g : SISO mode only, 802.11n H20 /H40: MIMO mode only.

Note:

1. For a more detailed features description, please refer to the manufacturer's specifications or the User Manual.

2.

| Operation Frequency of channel | | | |
|---|---|---|---|
| 802.11b/g/n(20MHz) | | Channel List for 802.11n(40MHz) | |
| Channel | Frequency | Channel | Frequency |
| 01 | 2412 | 03 | 2422 |
| 02 | 2417 | 04 | 2427 |
| 03 | 2422 | 05 | 2432 |
| 04 | 2427 | 06 | 2437 |
| 05 | 2432 | 07 | 2442 |
| 06 | 2437 | 08 | 2447 |
| 07 | 2442 | 09 | 2452 |
| 08 | 2447 | | |
| 09 | 2452 | | |
| 10 | 2457 | | |
| 11 | 2462 | | |

Note:
In section 15.31(m), regards to the operating frequency range over 10 MHz, the Lowest frequency, themiddle frequency, and the highest frequency of channel were selected to perform the test, and the selectedchannel see below:
Carrier Frequency Channel

2.4GHz Test Frequency:

| For 802.11b/g/n (HT20) | | For 802.11n (HT40) | |
|---|---|---|---|
| Channel | Freq.(MHz) | Channel | Freq.(MHz) |
| 01 | 2412 | 03 | 2422 |
| 06 | 2437 | 06 | 2437 |
| 11 | 2462 | 09 | 2452 |

3. KDB 662911 D01 Multiple Transmitter Output v02r01
2) Directional Gain Calculations for In-Band Measurements
a) Basic methodology with NANT transmit antennas, each with the same directional gain GANT dBi, being driven by NANT transmitter outputs of equal power. Directional gain is to be computed as follows:
(i) If any transmit signals are correlated with each other,
Directional gain = GANT + 10 log(NANT) dBi
(ii) If all transmit signals are completely uncorrelated with each other,
Directional gain = GANT

Antenna number: 2
ANT 1 gain : 5dBi
ANT 2 gain : 5dBi

GANT + 10 log(NANT) dBi
MIMO technology Directional gain=5+10log2=8.01dBi

Note: The antenna information refer the manufacturer provide report, applicable only to the tested sample identified in the report.

## 2.2 DESCRIPTION OF THE TEST MODES

Each of these EUT operation mode(s) or test configuration mode(s) mentioned above was evaluated respectively.

| Worst Mode | Description | Data Rate |
|---|---|---|
| Mode 1 | TX IEEE 802.11b CH1 | 1 Mbps |
| Mode 2 | TX IEEE 802.11b CH6 | 1 Mbps |
| Mode 3 | TX IEEE 802.11 b CH11 | 1 Mbps |
| Mode 4 | SISO mode | 1 Mbps |
| Mode 5 | TX IEEE 802.11g CH1 | 6 Mbps |
| Mode 6 | TX IEEE 802.11g CH6 | 6 Mbps |
| Mode 7 | TX IEEE 802.11g CH11 | 6 Mbps |
| Mode 8 | SISO mode | 6 Mbps |
| Mode 9 | TX IEEE 802.11n HT20 CH1 | MCS 0 |
| Mode 10 | TX IEEE 802.11n HT20 CH6 | MCS 0 |
| Mode 11 | TX IEEE 802.11n HT20 CH11 | MCS 0 |
| Mode 12 | keeping MIMO TX mode | MCS 0 |
| Mode 13 | TX IEEE 802.11n HT40 CH3 | MCS 0 |
| Mode 14 | TX IEEE 802.11n HT40 CH6 | MCS 0 |
| Mode 15 | TX IEEE 802.11n HT40 CH9 | MCS 0 |
| Mode 16 | keeping MIMO TX mode | MCS 0 |

Note:

(1) The measurements are performed at all Bit Rate of Transmitter, the worst data was reported.

(2) We have be tested for all avaiable U.S. voltage and frequencies(For 120V,50/60Hz and 240V, 50/60Hz) for which the device is capable of operation, and the worst case of 120V /60Hz is shown in the report.

(3) The battery is fully-charged during the radited and RF conducted test.

AC Conducted Emission

| Test Case | |
|---|---|
| AC Conducted Emission | Mode17: Keeping TX + WLAN Link |

2.3 TEST SOFTWARE AND POWER LEVEL

During testing channel & power controlling software provided by the customer was used to control the operating channel as well as the output power level.

| RF Function | Type | Mode Or Modulation type | ANT Gain(dBi) | ANT 1 Power Class | ANT 2 Power Class | Software For Testing |
|---|---|---|---|---|---|---|
| WIFI(2.4G) | 2.4G WIFI | 802.11b | ANT 1: 5<br>ANT 2: 5<br>MIMO: 8.01 | 5 | 5 | QATool_Dbg |
| | | 802.11g | | 5 | 5 | |
| | | 802.11n(HT20) | | 5 | 5 | |
| | | 802.11n(HT40) | | 5 | 5 | |

2.4 BLOCK DIAGRAM SHOWING THE CONFIGURATION OF SYSTEM TESTED

Radiation Test Set

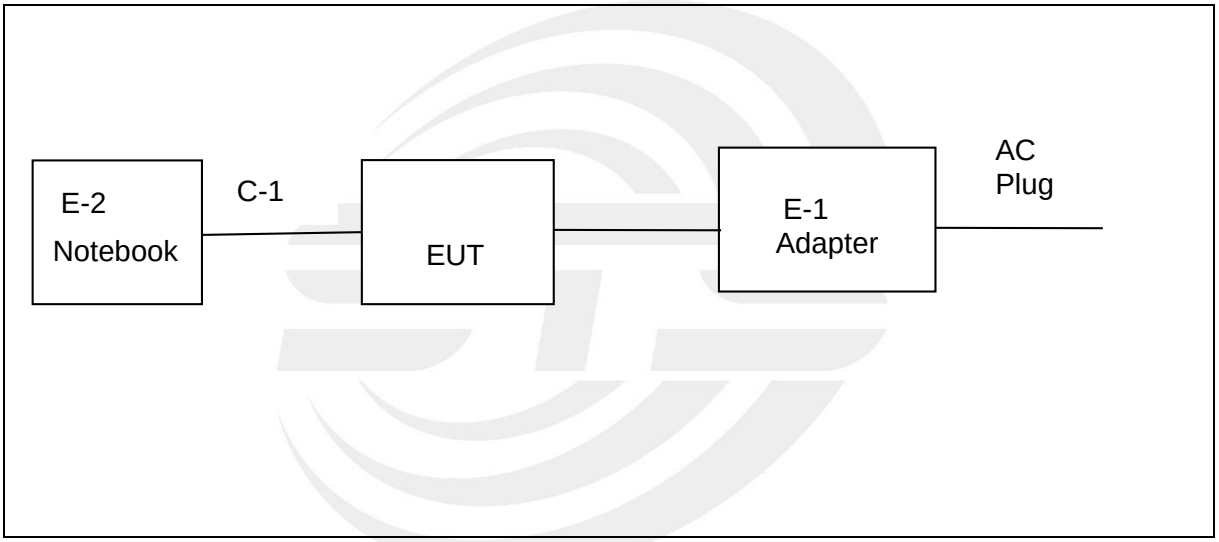


Conduction Test Set

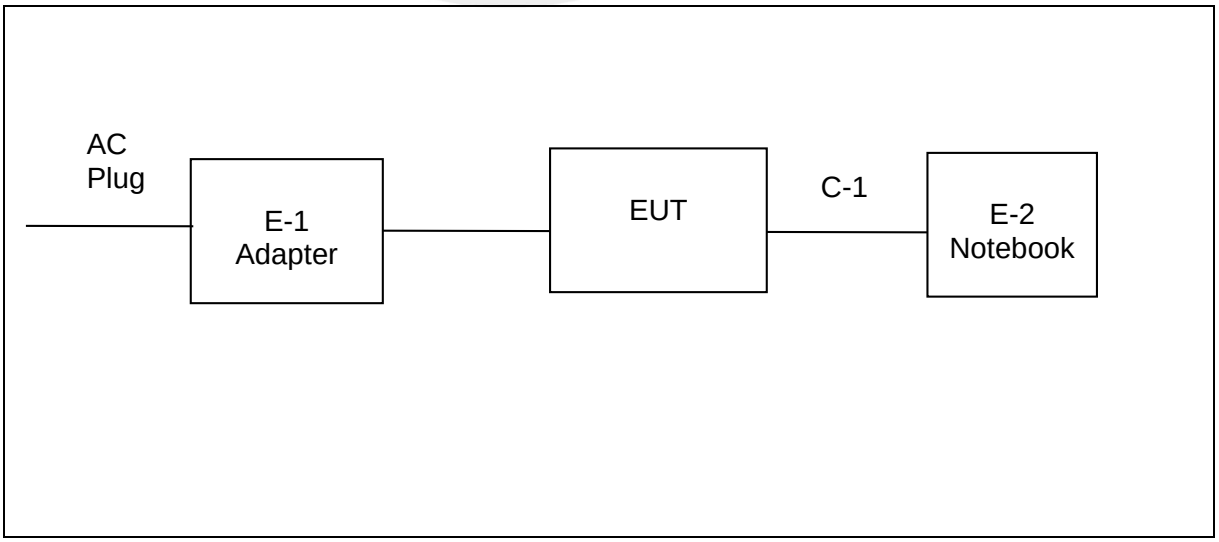

## 2.5 DESCRIPTION OF NECESSARY ACCESSORIES AND SUPPORT UNITS

The EUT has been tested as an independent unit together with other necessary accessories or support units. The following support units or accessories were used to form a representative test configuration during the tests.

Necessary accessories

| Item | Equipment | Mfr/Brand | Model/Type No. | Length | Note |
|---|---|---|---|---|---|
| E-1 | Adapter | N/A | GLH1201000 | N/A | N/A |
| C-1 | LAN Cable | N/A | N/A | 120cm | NO |
| | | | | | |
| | | | | | |

Support units

| Item | Equipment | Mfr/Brand | Model/Type No. | Length | Note |
|---|---|---|---|---|---|
| E-2 | Notebook | DELL | Inspiron 14-3467 | N/A | N/A |
| | | | | | |
| | | | | | |

Note:

(1) For detachable type I/O cable should be specified the length in cm in『Length』column.
(2) “YES” is means “with core”; “NO” is means “without core”.

## 2.6 EQUIPMENTS LIST FOR ALL TEST ITEMS

Radiation Test equipment

| Kind of Equipment | Manufacturer | Type No. | Serial No. | Last calibration | Calibrated until |
|---|---|---|---|---|---|
| Test Receiver | R&S | ESCI | 101427 | 2020.10.12 | 2021.10.11 |
| Signal Analyzer | R&S | FSV 40-N | 101823 | 2020.10.10 | 2021.10.09 |
| Active loop Antenna | ZHINAN | ZN30900C | 16035 | 2019.07.11 | 2021.07.10 |
| Bilog Antenna | TESEQ | CBL6111D | 34678 | 2020.10.12 | 2022.10.11 |
| Horn Antenna | SCHWARZBECK | BBHA 9120D | 02014 | 2019.10.15 | 2021.10.14 |
| SHF-EHF Horn Antenna (18G-40GHz) | A-INFO | LB-180400-KF | J211020657 | 2020.10.12 | 2022.10.11 |
| Pre-Amplifier (0.1M-3GHz) | EM | EM330 | 060665 | 2020.10.12 | 2021.10.11 |
| Pre-Amplifier (1G-18GHz) | SKET | LNPA-01018G-45 | SK2018080901 | 2020.10.12 | 2021.10.11 |
| Pre-Amplifier (18G-40GHz) | SKET | LNPA-1840-50 | SK2018101801 | 2020.10.10 | 2021.10.09 |
| Temperature & Humidity | HH660 | Mieo | N/A | 2020.10.13 | 2021.10.12 |
| Turn table | EM | SC100_1 | 60531 | N/A | N/A |
| Antenna mast | EM | SC100 | N/A | N/A | N/A |
| Test SW | FARAD | EZ-EMC(Ver.STSLAB-03A1 RE) | | | |

Conduction Test equipment

| Kind of Equipment | Manufacturer | Type No. | Serial No. | Last calibration | Calibrated until |
|---|---|---|---|---|---|
| Test Receiver | R&S | ESCI | 101427 | 2020.10.12 | 2021.10.11 |
| LISN | R&S | ENV216 | 101242 | 2020.10.12 | 2021.10.11 |
| LISN | EMCO | 3810/2NM | 23625 | 2020.10.12 | 2021.10.11 |
| Temperature & Humidity | HH660 | Mieo | N/A | 2020.10.13 | 2021.10.12 |
| Test SW | FARAD | EZ-EMC(Ver.STSLAB-03A1 RE) | | | |

RF Connected Test

| Kind of Equipment | Manufacturer | Type No. | Serial No. | Last calibration | Calibrated until |
|---|---|---|---|---|---|
| Power Sensor | Keysight | U2021XA | MY55520005 | 2020.10.10 | 2021.10.09 |
| | | | MY55520006 | 2020.10.10 | 2021.10.09 |
| | | | MY56120038 | 2020.10.10 | 2021.10.09 |
| | | | MY56280002 | 2020.10.10 | 2021.10.09 |
| Signal Analyzer | Agilent | N9020A | MY51110105 | 2020.03.05 | 2021.03.04 |
| Temperature & Humidity | HH660 | Mieo | N/A | 2020.10.13 | 2021.10.12 |
| MIMO Power measurement test Set | Keysight | U2021XA | MY55520005 | 2020.10.10 | 2021.10.09 |
| Test SW | FARAD | EZ-EMC(Ver.STSLAB-03A1 RE) | | | |

# 3. EMC EMISSION TEST

## 3.1 CONDUCTED EMISSION MEASUREMENT

### 3.1.1 POWER LINE CONDUCTED EMISSION LIMITS

The radio frequency voltage that is conducted back onto the AC power line on any frequency or frequencies, within the band 150 kHz to 30 MHz, shall not exceed the limits in the following table.

| FREQUENCY (MHz) | Conducted Emissionlimit (dBuV) | |
|---|---|---|
| | Quasi-peak | Average |
| 0.15 -0.5 | 66 - 56 * | 56 - 46 * |
| 0.50 -5.0 | 56.00 | 46.00 |
| 5.0 -30.0 | 60.00 | 50.00 |

Note:

(1) The tighter limit applies at the band edges.

(2) The limit of " * " marked band means the limitation decreases linearly with the logarithm of the frequency in the range.

The following table is the setting of the receiver

| **Receiver Parameters** | **Setting** |
|---|---|
| Attenuation | 10 dB |
| Start Frequency | 0.15 MHz |
| Stop Frequency | 30 MHz |
| IF Bandwidth | 9 kHz |

3.1.2 TEST PROCEDURE

a. The EUT is 0.8 m from the horizontal ground plane and 0.4 m from the vertical ground plane with EUT being connected to the power mains through a line impedance stabilization network (LISN). All other support equipments are powered from additional LISN(s). The LISN provides 50 Ohm/ 50uH of coupling impedance for the measuring instrument.
b. Interconnecting cables that hang closer than 40 cm to the ground plane shall be folded back and forth in the center forming a bundle 30 to 40 cm long.
c. I/O cables that are not connected to a peripheral shall be bundled in the center. The end of the cable may be terminated, if required, using the correct terminating impedance. The overall length shall not exceed 1 m.
d. LISN is at least 80 cm from the nearest part of EUT chassis.
e. For the actual test configuration, please refer to the related Item –EUT Test Photos.

3.1.3 TEST SETUP

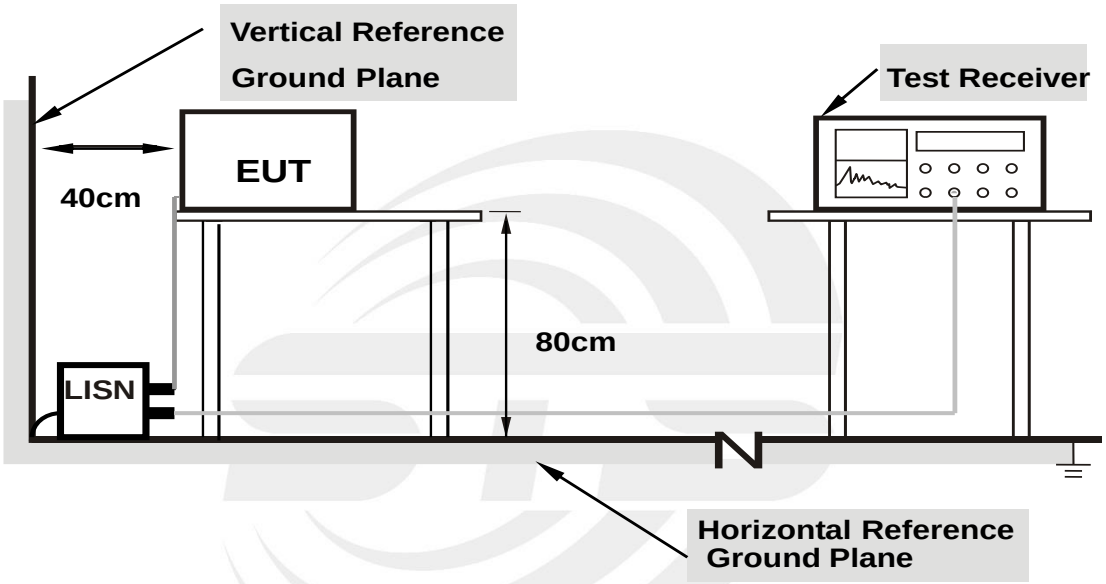


**Note: 1. Support units were connected to second LISN.**

**2. Both of LISNs (AMN) are 80 cm from EUT and at least 80 cm from other units and other metal planes support units.**

3.1.4 EUT OPERATING CONDITIONS

The EUT was configured for testing in a typical fashion (as a customer would normally use it). The EUT has been programmed to continuously transmit during test. This operating condition was tested and used to collect the included data.

3.1.5 TEST RESULT

| | | | |
|---|---|---|---|
| Temperature: | 26.2(C) | Relative Humidity: | 53%RH |
| Test Voltage: | AC 120V/60Hz | Phase: | L |
| Test Mode: | Mode 17 | | |

| No. | Frequency | Reading | Correct | Result | Limit | Margin | Remark |
|---|---|---|---|---|---|---|---|
| | (MHz) | (dBuV) | Factor(dB) | (dBuV) | (dBuV) | (dB) | |
| 1 | 0.1900 | 27.65 | 20.30 | 47.95 | 64.04 | -16.09 | QP |
| 2 | 0.1900 | 12.71 | 20.30 | 33.01 | 54.04 | -21.03 | AVG |
| 3 | 0.5620 | 22.25 | 20.38 | 42.63 | 56.00 | -13.37 | QP |
| 4 | 0.5620 | 15.06 | 20.38 | 35.44 | 46.00 | -10.56 | AVG |
| 5 | 1.2100 | 13.97 | 20.15 | 34.12 | 56.00 | -21.88 | QP |
| 6 | 1.2100 | 2.88 | 20.15 | 23.03 | 46.00 | -22.97 | AVG |
| 7 | 2.6140 | 13.06 | 20.11 | 33.17 | 56.00 | -22.83 | QP |
| 8 | 2.6140 | 0.31 | 20.11 | 20.42 | 46.00 | -25.58 | AVG |
| 9 | 9.2140 | 12.06 | 19.87 | 31.93 | 60.00 | -28.07 | QP |
| 10 | 9.2140 | -2.25 | 19.87 | 17.62 | 50.00 | -32.38 | AVG |
| 11 | 29.8420 | 13.46 | 20.99 | 34.45 | 60.00 | -25.55 | QP |
| 12 | 29.8420 | 2.74 | 20.99 | 23.73 | 50.00 | -26.27 | AVG |

Remark:
1. All readings are Quasi-Peak and Average values
2. Margin = Result (Result =Reading + Factor)–Limit
3. Factor=LISN factor+Cable loss+Limiter (10dB)

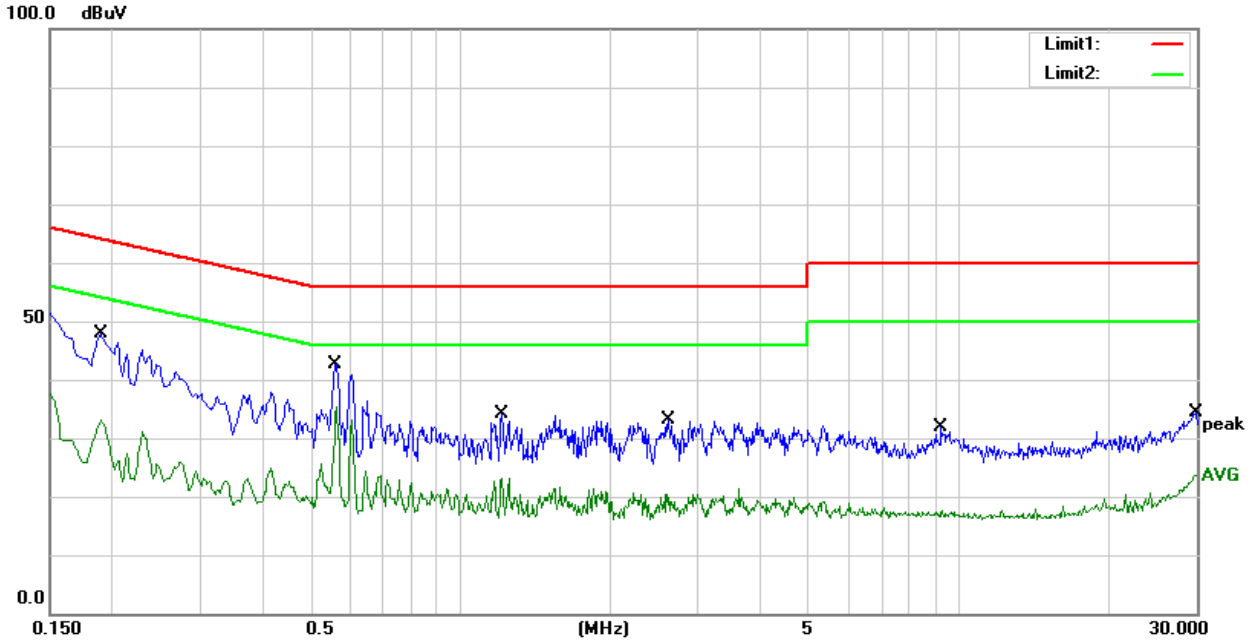

| | | | |
|---|---|---|---|
| Temperature: | 26.2(C) | Relative Humidity: | 53%RH |
| Test Voltage: | AC 120V/60Hz | Phase: | N |
| Test Mode: | Mode 17 | | |

| No. | Frequency | Reading | Correct | Result | Limit | Margin | Remark |
|---|---|---|---|---|---|---|---|
| | (MHz) | (dBuV) | Factor(dB) | (dBuV) | (dBuV) | (dB) | |
| 1 | 0.1500 | 30.46 | 20.19 | 50.65 | 66.00 | -15.35 | QP |
| 2 | 0.1500 | 15.79 | 20.19 | 35.98 | 56.00 | -20.02 | AVG |
| 3 | 0.6020 | 19.64 | 20.35 | 39.99 | 56.00 | -16.01 | QP |
| 4 | 0.6020 | 10.88 | 20.35 | 31.23 | 46.00 | -14.77 | AVG |
| 5 | 1.2060 | 11.26 | 20.15 | 31.41 | 56.00 | -24.59 | QP |
| 6 | 1.2060 | 0.41 | 20.15 | 20.56 | 46.00 | -25.44 | AVG |
| 7 | 2.9380 | 10.25 | 20.09 | 30.34 | 56.00 | -25.66 | QP |
| 8 | 2.9380 | -1.09 | 20.09 | 19.00 | 46.00 | -27.00 | AVG |
| 9 | 8.9460 | 9.34 | 19.88 | 29.22 | 60.00 | -30.78 | QP |
| 10 | 8.9460 | -2.68 | 19.88 | 17.20 | 50.00 | -32.80 | AVG |
| 11 | 29.9860 | 13.13 | 21.00 | 34.13 | 60.00 | -25.87 | QP |
| 12 | 29.9860 | 0.79 | 21.00 | 21.79 | 50.00 | -28.21 | AVG |

Remark:
1. All readings are Quasi-Peak and Average values
2. Margin = Result (Result =Reading + Factor)–Limit
3. Factor=LISN factor+Cable loss+Limiter (10dB)

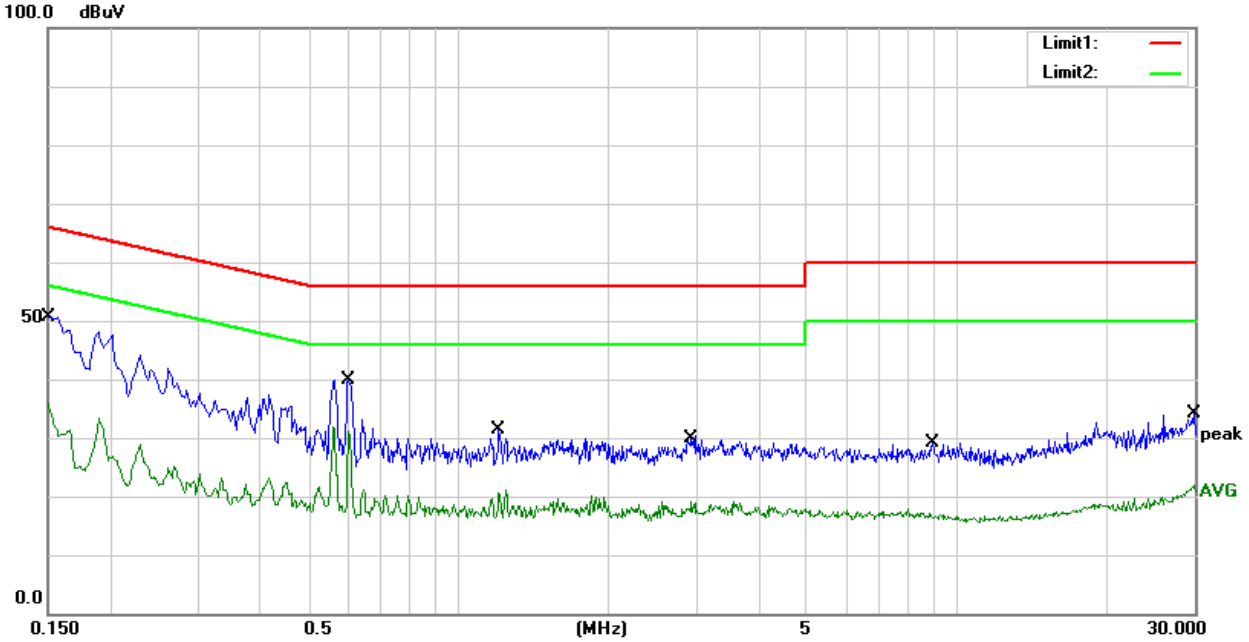

## 3.2 RADIATED EMISSION MEASUREMENT

### 3.2.1 RADIATED EMISSION LIMITS

In any 100 kHz bandwidth outside the operating frequency band. In case the emission fall within the Restricted band specified on Part15.205(a)&209(a) limit in the table and according to ANSI C63.10-2013 below has to be followed.

LIMITS OF RADIATED EMISSION MEASUREMENT (0.009MHz - 1000MHz)

| Frequencies (MHz) | Field Strength (micorvolts/meter) | Measurement Distance (meters) |
|---|---|---|
| 0.009~0.490 | 2400/F(KHz) | 300 |
| 0.490~1.705 | 24000/F(KHz) | 30 |
| 1.705~30.0 | 30 | 30 |
| 30~88 | 100 | 3 |
| 88~216 | 150 | 3 |
| 216~960 | 200 | 3 |
| Above 960 | 500 | 3 |

LIMITS OF RADIATED EMISSION MEASUREMENT (1000MHz-25GHz)

| FREQUENCY (MHz) | (dBuV/m) (at 3M) | |
|---|---|---|
| | PEAK | AVERAGE |
| Above 1000 | 74 | 54 |

Notes:

(1) The limit for radiated test was performed according to FCC PART 15C.

(2) The tighter limit applies at the band edges.

(3) Emission level (dBuV/m)=20log Emission level (uV/m).

LIMITS OF RESTRICTED FREQUENCY BANDS

| FREQUENCY (MHz) | FREQUENCY (MHz) | FREQUENCY (MHz) | FREQUENCY (GHz) |
|---|---|---|---|
| 0.090-0.110 | 16.42-16.423 | 399.9-410 | 4.5-5.15 |
| 0.495-0.505 | 16.69475-16.69525 | 608-614 | 5.35-5.46 |
| 2.1735-2.1905 | 16.80425-16.80475 | 960-1240 | 7.25-7.75 |
| 4.125-4.128 | 25.5-25.67 | 1300-1427 | 8.025-8.5 |
| 4.17725-4.17775 | 37.5-38.25 | 1435-1626.5 | 9.0-9.2 |
| 4.20725-4.20775 | 73-74.6 | 1645.5-1646.5 | 9.3-9.5 |
| 6.215-6.218 | 74.8-75.2 | 1660-1710 | 10.6-12.7 |
| 6.26775-6.26825 | 108-121.94 | 1718.8-1722.2 | 13.25-13.4 |
| 6.31175-6.31225 | 123-138 | 2200-2300 | 14.47-14.5 |
| 8.291-8.294 | 149.9-150.05 | 2310-2390 | 15.35-16.2 |
| 8.362-8.366 | 156.52475-156.52525 | 2483.5-2500 | 17.7-21.4 |
| 8.37625-8.38675 | 156.7-156.9 | 2690-2900 | 22.01-23.12 |
| 8.41425-8.41475 | 162.0125-167.17 | 3260-3267 | 23.6-24.0 |
| 12.29-12.293 | 167.72-173.2 | 3332-3339 | 31.2-31.8 |
| 12.51975-12.52025 | 240-285 | 3345.8-3358 | 36.43-36.5 |
| 12.57675-12.57725 | 322-335.4 | 3600-4400 | Above 38.6 |
| 13.36-13.41 | | | |

For Radiated Emission

| Spectrum Parameter | Setting |
|---|---|
| Attenuation | Auto |
| Detector | Peak/QP/AV |
| Start Frequency | 9 KHz/150KHz(Peak/QP/AV) |
| Stop Frequency | 150KHz/30MHz(Peak/QP/AV) |
| RB / VB (emission in restricted band) | 200Hz (From 9kHz to 0.15MHz)/<br>9KHz (From 0.15MHz to 30MHz);<br>200Hz (From 9kHz to 0.15MHz)/<br>9KHz (From 0.15MHz to 30MHz) |

| Spectrum Parameter | Setting |
|---|---|
| Attenuation | Auto |
| Detector | Peak/QP |
| Start Frequency | 30 MHz(Peak/QP) |
| Stop Frequency | 1000 MHz (Peak/QP) |
| RB / VB (emission in restricted band) | 120 KHz / 300 KHz |

| Spectrum Parameter | Setting |
|---|---|
| Attenuation | Auto |
| Detector | Peak/AV |
| Start Frequency | 1000 MHz(Peak/AV) |
| Stop Frequency | 10th carrier hamonic(Peak/AV) |
| RB / VB (emission in restricted band) | 1 MHz / 3 MHz(Peak)<br>1 MHz/1/T MHz(AVG) |

For Restricted band

| Spectrum Parameter | Setting |
|---|---|
| Detector | Peak/AV |
| Start/Stop Frequency | Lower Band Edge: 2310 to 2430 MHz<br>Upper Band Edge: 2445 to 2500 MHz |
| RB / VB | 1 MHz / 3 MHz(Peak)<br>1 MHz/1/T MHz(AVG) |

| Receiver Parameter | Setting |
|---|---|
| Start ~ Stop Frequency | 9kHz~90kHz / RB 200Hz for PK & AV |
| Start ~ Stop Frequency | 90kHz~110kHz / RB 200Hz for QP |
| Start ~ Stop Frequency | 110kHz~490kHz / RB 200Hz for PK & AV |
| Start ~ Stop Frequency | 490kHz~30MHz / RB 9kHz for QP |
| Start ~ Stop Frequency | 30MHz~1000MHz / RB 120kHz for QP |

3.2.2 TEST PROCEDURE

a. The measuring distance at 3 m shall be used for measurements at frequency 0.009MHz up to 1GHz, and above 1GHz.
b. The EUT was placed on the top of a rotating table 0.8 m (above 1GHz is 1.5 m) above the ground at a 3 m anechoic chamber test site. The table was rotated 360 degree to determine the position of the highest radiation.
c. The height of the equipment shall be 0.8 m (above 1GHz is 1.5 m); the height of the test antenna shall vary between 1 m to 4 m. Horizontal and vertical polarization of the ANT 1re set to make the measurement.
d. The initial step in collecting conducted emission data is a spectrum analyzer peak detector mode pre-scanning the measurement frequency range. Significant peaks are then marked and QuasiPeak detector mode will be re-measured.
e. If the Peak Mode measured value is compliance with and lower than Quasi Peak Mode Limit, the EUT shall be deemed to meet QP Limits and no additional QP Mode measurement was performed.
f. For the actual test configuration, please refer to the related Item –EUT Test Photos.

Note:

Both horizontal and vertical antenna polarities were tested and performed pretest to three orthogonal axis. The worst case emissions were reported.

3.2.3 TEST SETUP

(A) Radiated Emission Test-Up Frequency Below 30MHz

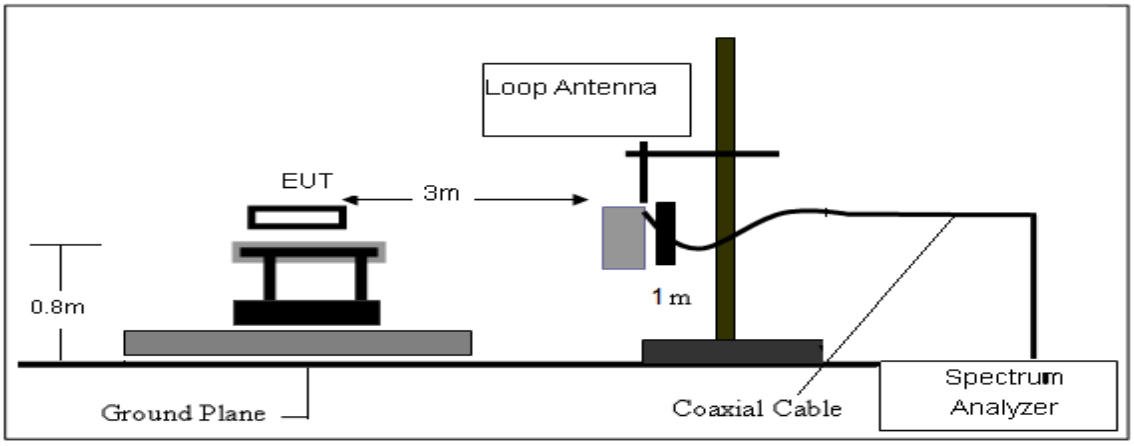


(B) Radiated Emission Test-Up Frequency 30MHz~1GHz

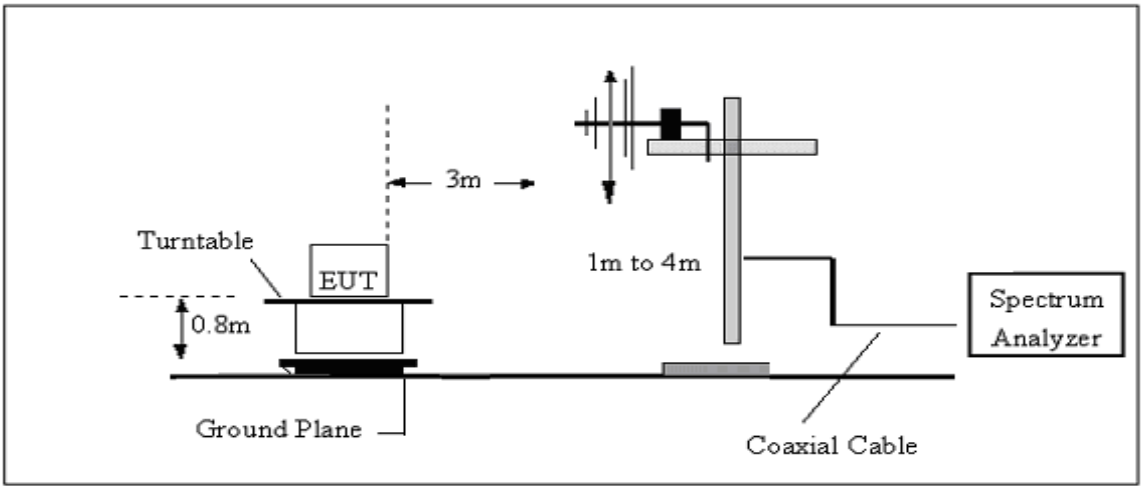


(C) Radiated Emission Test-Up Frequency Above 1GHz

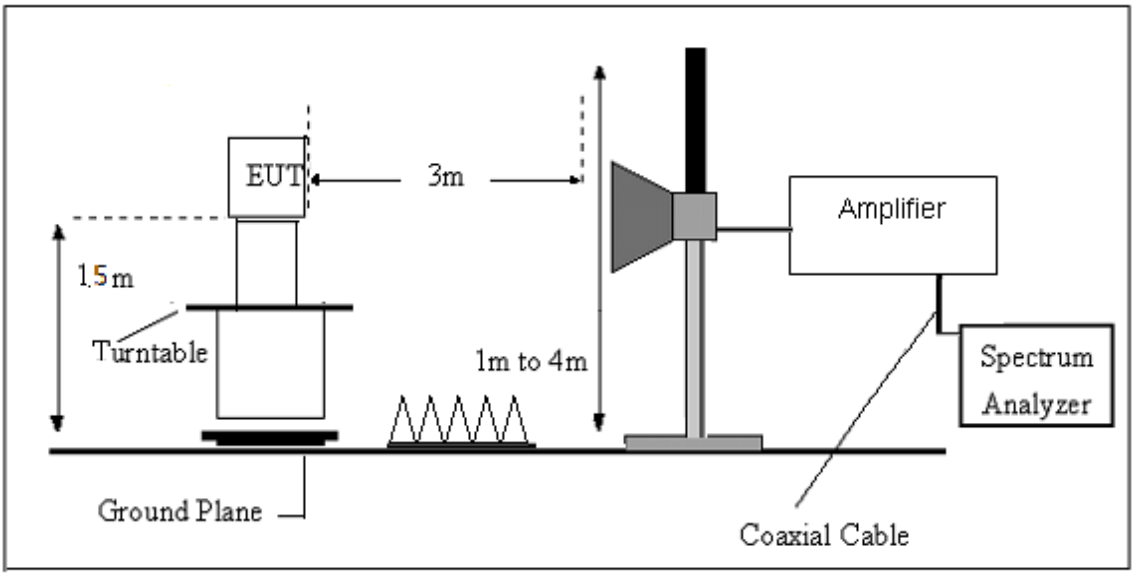


3.2.4 EUT OPERATING CONDITIONS

Please refer to section 3.1.4 of this report.

3.2.5 FIELD STRENGTH CALCULATION

The field strength is calculated by adding the Antenna Factor and Cable Factor and subtracting theAmplifier Gain and Duty Cycle Correction Factor (if any) from the measured reading. The basic equation with a sample calculation is as follows:

FS = RA + AF + CL - AG

Where

FS = Field Strength

CL = Cable Attenuation Factor (Cable Loss)

RA = Reading Amplitude

AG = Amplifier Gain

AF = Antenna Factor

For example

| Frequency | FS | RA | AF | CL | AG | Factor |
|---|---|---|---|---|---|---|
| (MHz) | (dBμV/m) | (dBμV/m) | (dB) | (dB) | (dB) | (dB) |
| 300 | 40 | 58.1 | 12.2 | 1.6 | 31.9 | -18.1 |

Factor=AF+CL-AG

3.2.6 TEST RESULT

9KHz-30MHz

| | | | |
|---|---|---|---|
| Temperature: | 23.1(C) | Relative Humidtity: | 60%RH |
| Test Voltage: | AC 120V/60Hz | Polarization: | -- |
| Test Mode: | TX Mode | | |

| Freq. (MHz) | Reading (dBuV/m) | Limit (dBuV/m) | Margin (dB) | State P/F | Test Result |
|---|---|---|---|---|---|
| -- | -- | -- | -- | -- | PASS |
| -- | -- | -- | -- | -- | PASS |

Note:
The amplitude of spurious emissions which are attenuated by more than 20dB below the permissible value has no need to be reported.
Distance extrapolation factor =40 log (specific distance/test distance)(dB);
Limit line = specific limits(dBuv) + distance extrapolation factor.

(30MHz - 1000MHz)

| | | | |
|---|---|---|---|
| Temperature: | 23.1(C) | Relative Humidtity: | 60%RH |
| Test Voltage: | AC 120V/60Hz | Phase: | Horizontal |
| Test Mode: | Mode 1/2/3/4/5/6/7/8/9/10/11/12/13/14/15/16 (Mode 12 worst mode) | | |

| No. | Frequency | Reading | Correct | Result | Limit | Margin | Remark |
|---|---|---|---|---|---|---|---|
| | (MHz) | (dBuV) | Factor(dB/m) | (dBuV/m) | (dBuV/m) | (dB) | |
| 1 | 108.5700 | 61.54 | -19.22 | 42.32 | 43.50 | -1.18 | QP |
| 2 | 142.5200 | 57.73 | -18.18 | 39.55 | 43.50 | -3.95 | QP |
| 3 | 332.6400 | 45.30 | -13.62 | 31.68 | 46.00 | -14.32 | QP |
| 4 | 398.6000 | 42.19 | -11.20 | 30.99 | 46.00 | -15.01 | QP |
| 5 | 750.7100 | 33.08 | -2.16 | 30.92 | 46.00 | -15.08 | QP |
| 6 | 997.0900 | 34.94 | 2.04 | 36.98 | 54.00 | -17.02 | QP |

Remark:

1. Margin = Result (Result =Reading + Factor )–Limit
2. Factor= Antenna factor+Cable attenuation factor(cable loss)-Amplifier gain

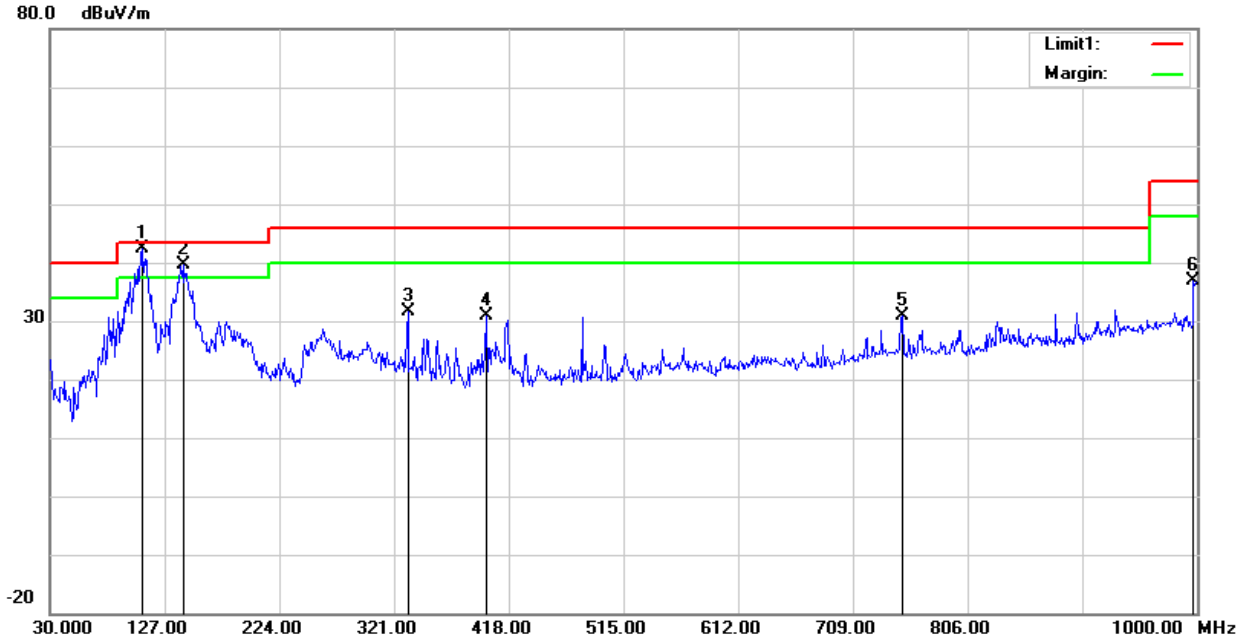

| | | | |
|---|---|---|---|
| Temperature: | 23.1(C) | Relative Humidtity: | 60%RH |
| Test Voltage: | AC 120V/60Hz | Phase: | Vertical |
| Test Mode: | Mode 1/2/3/4/5/6/7/8/9/10/11/12/13/14/15/16 (Mode 12 worst mode) | | |

| No. | Frequency | Reading | Correct | Result | Limit | Margin | Remark |
|---|---|---|---|---|---|---|---|
| | (MHz) | (dBuV) | Factor(dB/m) | (dBuV/m) | (dBuV/m) | (dB) | |
| 1 | 79.4700 | 56.43 | -23.11 | 33.32 | 40.00 | -6.68 | QP |
| 2 | 108.5700 | 58.51 | -19.22 | 39.29 | 43.50 | -4.21 | QP |
| 3 | 398.6000 | 41.03 | -11.20 | 29.83 | 46.00 | -16.17 | QP |
| 4 | 480.0800 | 40.52 | -8.65 | 31.87 | 46.00 | -14.13 | QP |
| 5 | 831.2200 | 33.19 | -0.70 | 32.49 | 46.00 | -13.51 | QP |
| 6 | 912.7000 | 37.31 | -0.14 | 37.17 | 46.00 | -8.83 | QP |

Remark:.

1. Margin = Result (Result =Reading + Factor )–Limit
2. Factor= Antenna factor+Cable attenuation factor(cable loss)-Amplifier gain

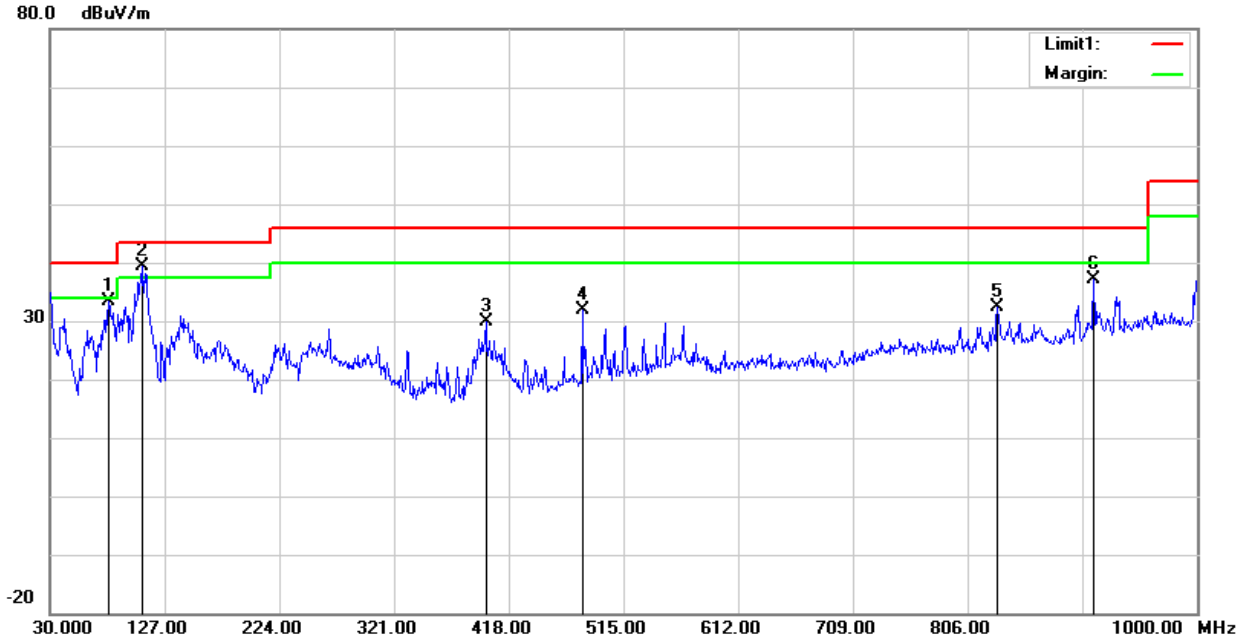

(1000MHz-25GHz) Restricted band and Spurious emission Requirements

# 802.11 n(HT20)

| Frequency | Meter Reading | Amplifier | Loss | Antenna Factor | Corrected Factor | Emission Level | Limits | Margin | Detector | Comment |
|---|---|---|---|---|---|---|---|---|---|---|
| (MHz) | (dBμV) | (dB) | (dB) | (dB/m) | (dB) | (dBμV/m) | (dBμV/m) | (dB) | Type | |
| Low Channel (802.11n20/2412 MHz) | | | | | | | | | | |
| 3264.86 | 61.54 | 44.70 | 6.70 | 28.20 | -9.80 | 51.74 | 74.00 | -22.26 | PK | Vertical |
| 3264.86 | 51.74 | 44.70 | 6.70 | 28.20 | -9.80 | 41.94 | 54.00 | -12.06 | AV | Vertical |
| 3264.65 | 62.15 | 44.70 | 6.70 | 28.20 | -9.80 | 52.35 | 74.00 | -21.65 | PK | Horizontal |
| 3264.65 | 50.97 | 44.70 | 6.70 | 28.20 | -9.80 | 41.17 | 54.00 | -12.83 | AV | Horizontal |
| 4824.41 | 58.37 | 44.20 | 9.04 | 31.60 | -3.56 | 54.81 | 74.00 | -19.19 | PK | Vertical |
| 4824.41 | 49.48 | 44.20 | 9.04 | 31.60 | -3.56 | 45.92 | 54.00 | -8.08 | AV | Vertical |
| 4824.55 | 59.19 | 44.20 | 9.04 | 31.60 | -3.56 | 55.63 | 74.00 | -18.37 | PK | Horizontal |
| 4824.55 | 50.26 | 44.20 | 9.04 | 31.60 | -3.56 | 46.70 | 54.00 | -7.30 | AV | Horizontal |
| 5359.79 | 49.38 | 44.20 | 9.86 | 32.00 | -2.34 | 47.04 | 74.00 | -26.96 | PK | Vertical |
| 5359.79 | 40.35 | 44.20 | 9.86 | 32.00 | -2.34 | 38.01 | 54.00 | -15.99 | AV | Vertical |
| 5359.82 | 47.18 | 44.20 | 9.86 | 32.00 | -2.34 | 44.84 | 74.00 | -29.16 | PK | Horizontal |
| 5359.82 | 38.27 | 44.20 | 9.86 | 32.00 | -2.34 | 35.93 | 54.00 | -18.07 | AV | Horizontal |
| 7235.69 | 53.58 | 43.50 | 11.40 | 35.50 | 3.40 | 56.98 | 74.00 | -17.02 | PK | Vertical |
| 7235.69 | 43.61 | 43.50 | 11.40 | 35.50 | 3.40 | 47.01 | 54.00 | -6.99 | AV | Vertical |
| 7235.75 | 54.94 | 43.50 | 11.40 | 35.50 | 3.40 | 58.34 | 74.00 | -15.66 | PK | Horizontal |
| 7235.75 | 44.41 | 43.50 | 11.40 | 35.50 | 3.40 | 47.81 | 54.00 | -6.19 | AV | Horizontal |
| Middle Channel (802.11n20/2437 MHz) | | | | | | | | | | |
| 3264.85 | 61.70 | 44.70 | 6.70 | 28.20 | -9.80 | 51.90 | 74.00 | -22.10 | PK | Vertical |
| 3264.85 | 50.33 | 44.70 | 6.70 | 28.20 | -9.80 | 40.53 | 54.00 | -13.47 | AV | Vertical |
| 3264.66 | 61.25 | 44.70 | 6.70 | 28.20 | -9.80 | 51.45 | 74.00 | -22.55 | PK | Horizontal |
| 3264.66 | 50.66 | 44.70 | 6.70 | 28.20 | -9.80 | 40.86 | 54.00 | -13.14 | AV | Horizontal |
| 4874.46 | 58.68 | 44.20 | 9.04 | 31.60 | -3.56 | 55.12 | 74.00 | -18.88 | PK | Vertical |
| 4874.46 | 49.86 | 44.20 | 9.04 | 31.60 | -3.56 | 46.30 | 54.00 | -7.70 | AV | Vertical |
| 4874.57 | 59.39 | 44.20 | 9.04 | 31.60 | -3.56 | 55.83 | 74.00 | -18.17 | PK | Horizontal |
| 4874.57 | 49.70 | 44.20 | 9.04 | 31.60 | -3.56 | 46.14 | 54.00 | -7.86 | AV | Horizontal |
| 5359.77 | 48.53 | 44.20 | 9.86 | 32.00 | -2.34 | 46.19 | 74.00 | -27.81 | PK | Vertical |
| 5359.77 | 40.23 | 44.20 | 9.86 | 32.00 | -2.34 | 37.89 | 54.00 | -16.11 | AV | Vertical |
| 5359.66 | 47.85 | 44.20 | 9.86 | 32.00 | -2.34 | 45.51 | 74.00 | -28.49 | PK | Horizontal |
| 5359.66 | 38.22 | 44.20 | 9.86 | 32.00 | -2.34 | 35.88 | 54.00 | -18.12 | AV | Horizontal |
| 7310.91 | 54.58 | 43.50 | 11.40 | 35.50 | 3.40 | 57.98 | 74.00 | -16.02 | PK | Vertical |
| 7310.91 | 43.76 | 43.50 | 11.40 | 35.50 | 3.40 | 47.16 | 54.00 | -6.84 | AV | Vertical |
| 7310.73 | 54.73 | 43.50 | 11.40 | 35.50 | 3.40 | 58.13 | 74.00 | -15.87 | PK | Horizontal |
| 7310.73 | 43.86 | 43.50 | 11.40 | 35.50 | 3.40 | 47.26 | 54.00 | -6.74 | AV | Horizontal |

| High Channel (802.11n20/2462 MHz) | | | | | | | | | | |
|---|---|---|---|---|---|---|---|---|---|---|
| 3264.62 | 61.71 | 44.70 | 6.70 | 28.20 | -9.80 | 51.91 | 74.00 | -22.09 | PK | Vertical |
| 3264.62 | 50.87 | 44.70 | 6.70 | 28.20 | -9.80 | 41.07 | 54.00 | -12.93 | AV | Vertical |
| 3264.82 | 60.77 | 44.70 | 6.70 | 28.20 | -9.80 | 50.97 | 74.00 | -23.03 | PK | Horizontal |
| 3264.82 | 50.69 | 44.70 | 6.70 | 28.20 | -9.80 | 40.89 | 54.00 | -13.11 | AV | Horizontal |
| 4924.32 | 58.44 | 44.20 | 9.04 | 31.60 | -3.56 | 54.88 | 74.00 | -19.12 | PK | Vertical |
| 4924.32 | 49.66 | 44.20 | 9.04 | 31.60 | -3.56 | 46.10 | 54.00 | -7.90 | AV | Vertical |
| 4924.36 | 58.18 | 44.20 | 9.04 | 31.60 | -3.56 | 54.62 | 74.00 | -19.38 | PK | Horizontal |
| 4924.36 | 50.02 | 44.20 | 9.04 | 31.60 | -3.56 | 46.46 | 54.00 | -7.54 | AV | Horizontal |
| 5359.80 | 48.28 | 44.20 | 9.86 | 32.00 | -2.34 | 45.94 | 74.00 | -28.06 | PK | Vertical |
| 5359.80 | 40.33 | 44.20 | 9.86 | 32.00 | -2.34 | 37.99 | 54.00 | -16.01 | AV | Vertical |
| 5359.57 | 48.15 | 44.20 | 9.86 | 32.00 | -2.34 | 45.81 | 74.00 | -28.19 | PK | Horizontal |
| 5359.57 | 38.45 | 44.20 | 9.86 | 32.00 | -2.34 | 36.11 | 54.00 | -17.89 | AV | Horizontal |
| 7385.89 | 54.02 | 43.50 | 11.40 | 35.50 | 3.40 | 57.42 | 74.00 | -16.58 | PK | Vertical |
| 7385.89 | 43.82 | 43.50 | 11.40 | 35.50 | 3.40 | 47.22 | 54.00 | -6.78 | AV | Vertical |
| 7385.79 | 54.51 | 43.50 | 11.40 | 35.50 | 3.40 | 57.91 | 74.00 | -16.09 | PK | Horizontal |
| 7385.79 | 44.97 | 43.50 | 11.40 | 35.50 | 3.40 | 48.37 | 54.00 | -5.63 | AV | Horizontal |

Remark:

1. Factor = Antenna Factor + Cable Loss – Pre-amplifier.
2. Scan with 802.11b, 802.11g, 802.11n (HT-20), 802.11n (HT-40) all have been tested the ANT 1, ANT 2 and ANT 1+2, the worst case is 802.11n(HT20) of the ANT 1+2.
   Emission Level = Reading + Factor
   Margin = Limit - Emission Level
3. The frequency emission of peak points that did not show above the forms are at least 20dB below the limit, the frequency emission is mainly from the environment noise.

3.2.6 TEST RESULTS(Restricted band Requirements)

**802.11 n(HT20)-Low**

Horizontal

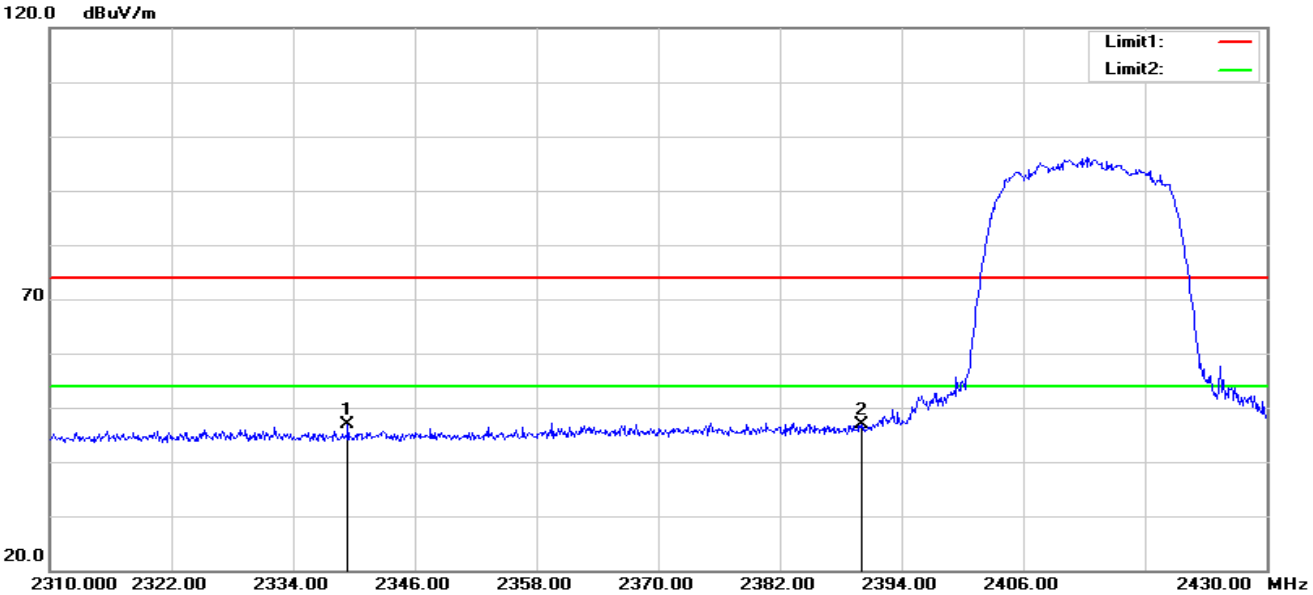


| No. | Frequency | Reading | Correct | Result | Limit | Margin | Remark |
|---|---|---|---|---|---|---|---|
| | (MHz) | (dBuV) | Factor(dB/m) | (dBuV/m) | (dBuV/m) | (dB) | |
| 1 | 2339.400 | 43.13 | 3.68 | 46.81 | 74.00 | -27.19 | peak |
| 2 | 2390.000 | 42.54 | 4.34 | 46.88 | 74.00 | -27.12 | peak |

Vertical

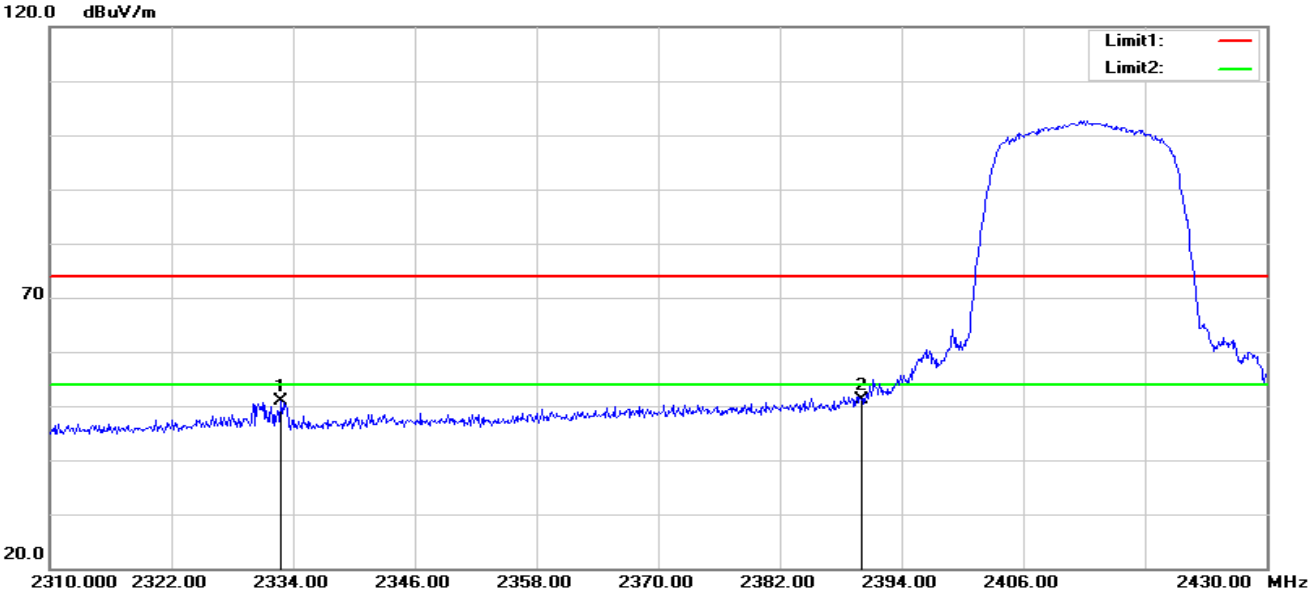


| No. | Frequency | Reading | Correct | Result | Limit | Margin | Remark |
|---|---|---|---|---|---|---|---|
| | (MHz) | (dBuV) | Factor(dB/m) | (dBuV/m) | (dBuV/m) | (dB) | |
| 1 | 2332.800 | 47.34 | 3.65 | 50.99 | 74.00 | -23.01 | peak |
| 2 | 2390.000 | 46.81 | 4.34 | 51.15 | 74.00 | -22.85 | peak |

**802.11 n(HT20)-High**

Horizontal

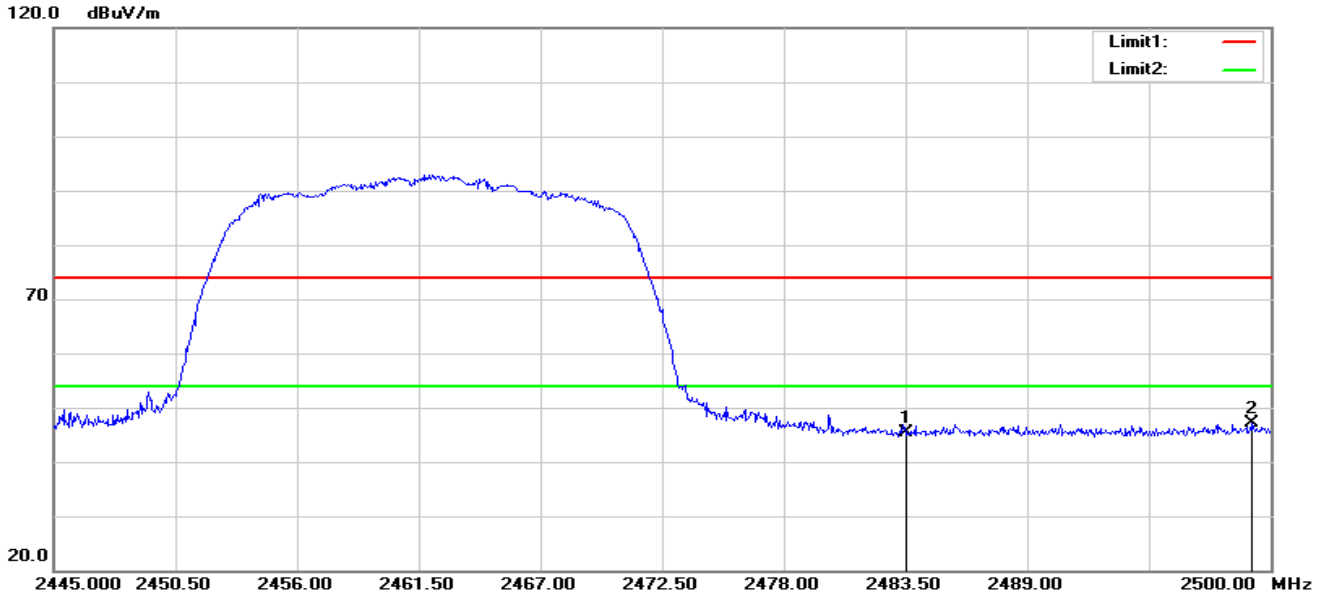


| No. | Frequency | Reading | Correct | Result | Limit | Margin | Remark |
|---|---|---|---|---|---|---|---|
| | (MHz) | (dBuV) | Factor(dB/m) | (dBuV/m) | (dBuV/m) | (dB) | |
| 1 | 2483.500 | 40.77 | 4.60 | 45.37 | 74.00 | -28.63 | peak |
| 2 | 2499.120 | 42.51 | 4.65 | 47.16 | 74.00 | -26.84 | peak |

Vertical

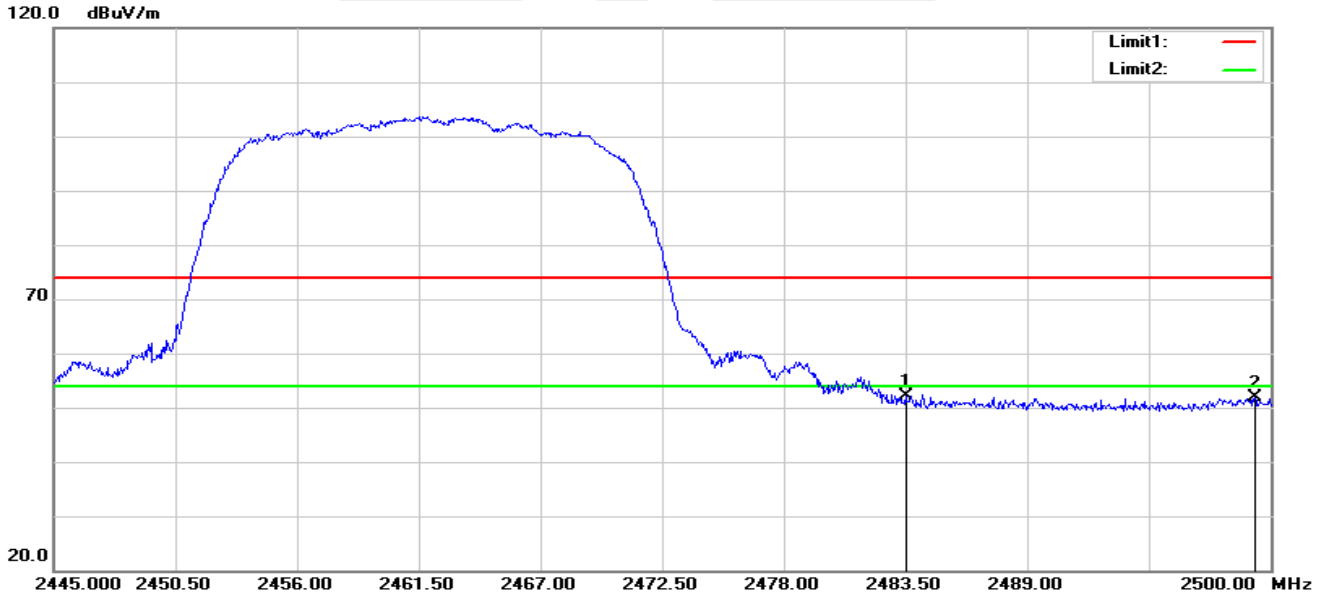


| No. | Frequency | Reading | Correct | Result | Limit | Margin | Remark |
|---|---|---|---|---|---|---|---|
| | (MHz) | (dBuV) | Factor(dB/m) | (dBuV/m) | (dBuV/m) | (dB) | |
| 1 | 2483.500 | 47.64 | 4.60 | 52.24 | 74.00 | -21.76 | peak |
| 2 | 2499.285 | 47.34 | 4.65 | 51.99 | 74.00 | -22.01 | peak |

Note: 802.11b, 802.11g, 802.11n (HT-20), 802.11n (HT-40),all have been tested the ANT 1, ANT 2 and ANT 1+2, the worst case is 802.11 n(HT20) of the ANT 1+2.

# 4. CONDUCTED SPURIOUS & BAND EDGE EMISSION

## 4.1 LIMIT

According to FCC section 15.247(d), in any 100kHz bandwidth outside the frequency band in which the spread spectrum or digitally modulated intentional radiator is operating, the radio frequency power that is produced by the intentional radiator shall be at least 20dB below that in the 100kHz bandwidth within the band that contains the highest level of the desired power, based on either an RF conducted or a radiated measurement.

## 4.2 TEST PROCEDURE

| Spectrum Parameter | Setting |
|---|---|
| Detector | Peak |
| Start/Stop Frequency | 30 MHz to 10th carrier harmonic |
| RB / VB (emission in restricted band) | 100 KHz/300 KHz |
| Trace-Mode: | Max hold |

For Band edge

| Spectrum Parameter | Setting |
|---|---|
| Detector | Peak |
| Start/Stop Frequency | Lower Band Edge: 2300 to 2432 MHz<br>Upper Band Edge: 2442 to 2500 MHz |
| RB / VB (emission in restricted band) | 100 KHz/300 KHz |
| Trace-Mode: | Max hold |

## 4.3 DEVIATION FROM STANDARD

No deviation.

## 4.4 TEST SETUP

The EUT which is powered by the Battery, is connected to the Spectrum Analyzer; the RF load attached to the EUT antenna terminal is 50Ohm; the path loss as the factor is calibrated to correct the reading.

Make the measurement with the spectrum analyzer's resolution bandwidth (RBW) = 100 kHz. In order to make an accurate measurement, set the span greater than RBW.

## 4.5 EUT OPERATION CONDITIONS

Please refer to section 3.1.4 of this report.

## 4.6 TEST RESULTS

Note: The emission level of ANT1&ANT 2 have attenuated 3dB below the limits, so the MIMO mode passed.

ANT 1

| | | | |
|---|---|---|---|
| Temperature: | 25℃ | Relative Humidity: | 60% |
| Test Voltage: | AC 120V/60Hz | Test Mode: | TX b Mode /CH01, CH06, CH11 |

CH 01

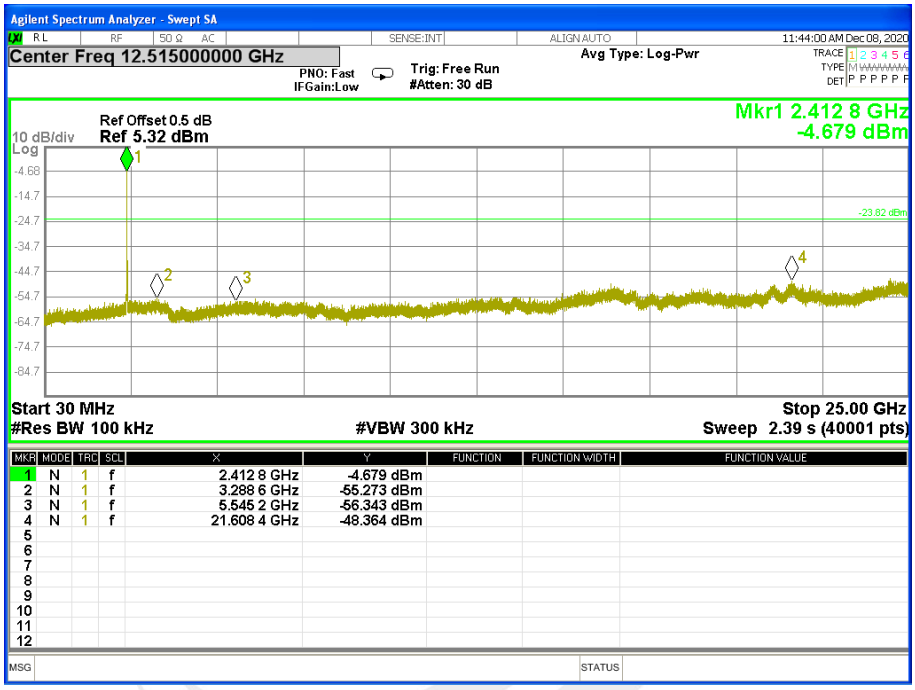


CH 06

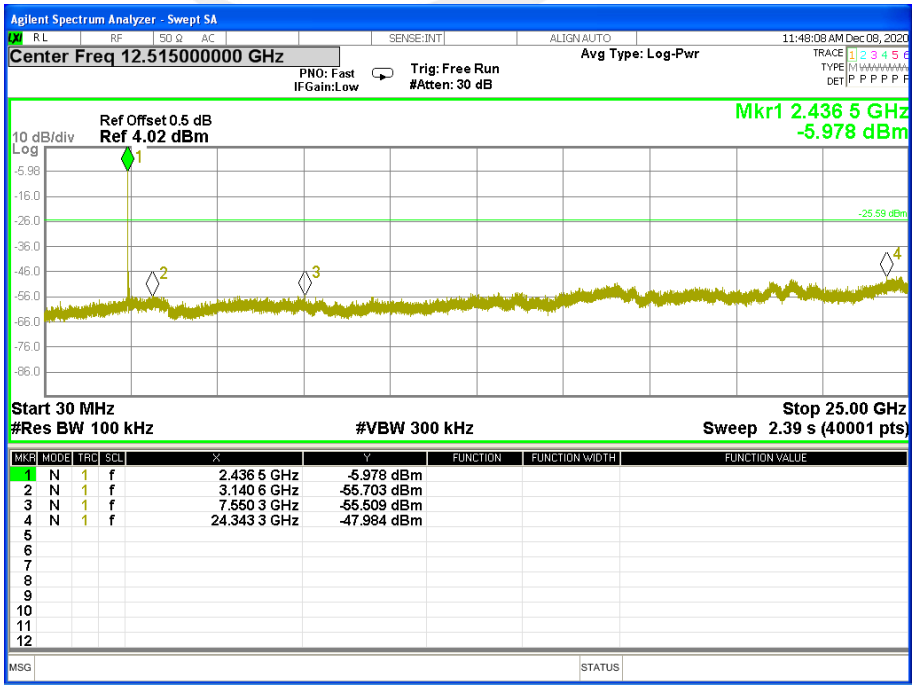

CH 11

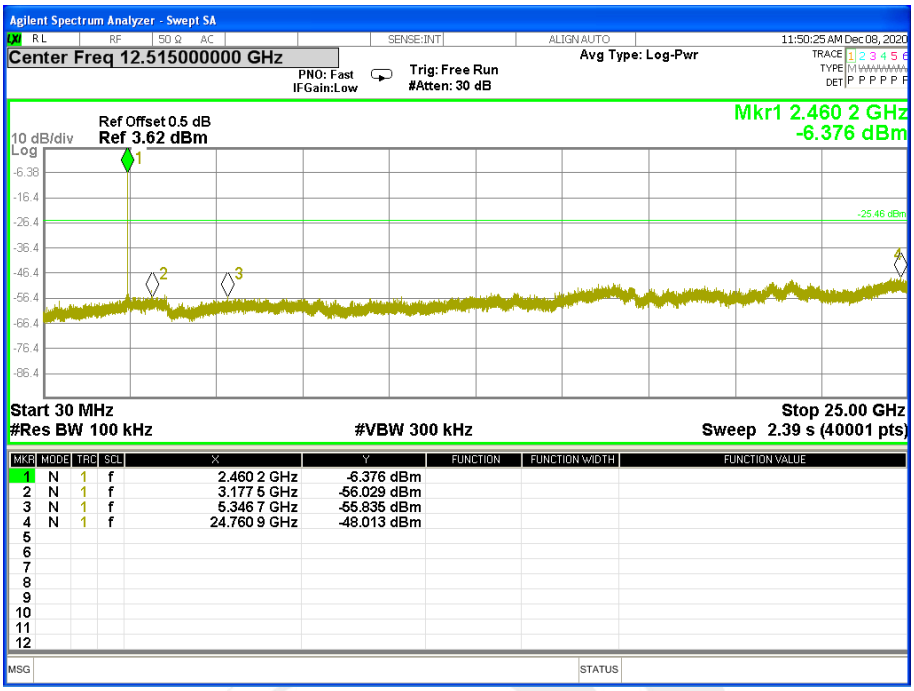
Agilent Spectrum Analyzer - Swept SA
Center Freq 12.515000000 GHz
PNO: Fast
IFGain:Low
Trig: Free Run
#Atten: 30 dB
Avg Type: Log-Pwr
11:50:25 AM Dec 08, 2020
Ref Offset 0.5 dB
10 dB/div
Ref 3.62 dBm
Mkr1 2.460 2 GHz
-6.376 dBm
-25.46 dBm
Start 30 MHz
#Res BW 100 kHz
#VBW 300 kHz
Stop 25.00 GHz
Sweep 2.39 s (40001 pts)
1 N 1 f 2.460 2 GHz -6.376 dBm
2 N 1 f 3.177 5 GHz -56.029 dBm
3 N 1 f 5.346 7 GHz -55.835 dBm
4 N 1 f 24.760 9 GHz -48.013 dBm

Band edge(it's also the reference level for conducted spurious emission)

CH 01

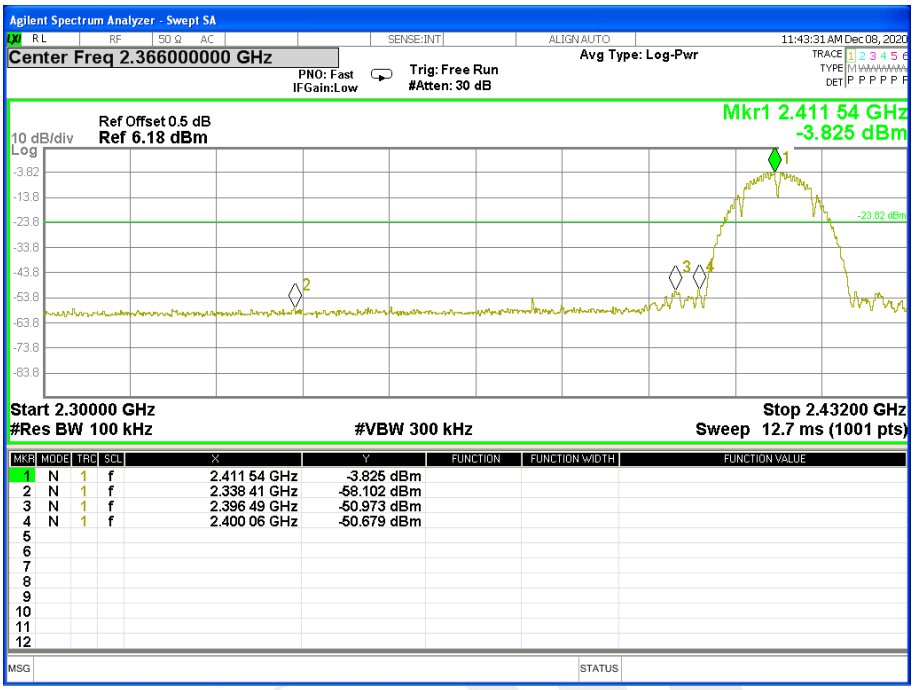

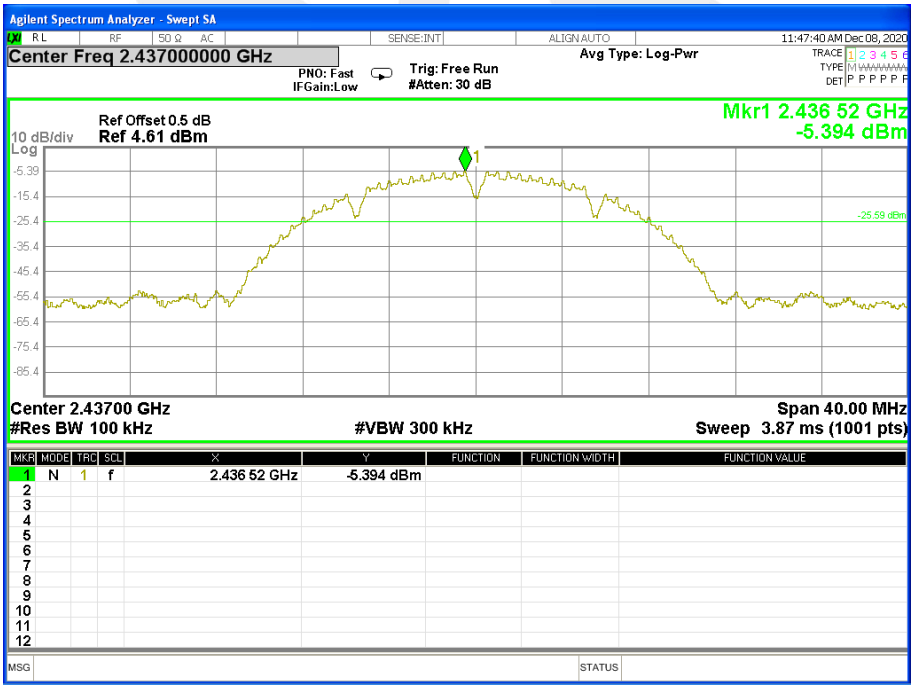
CH 06