Baby Monitor

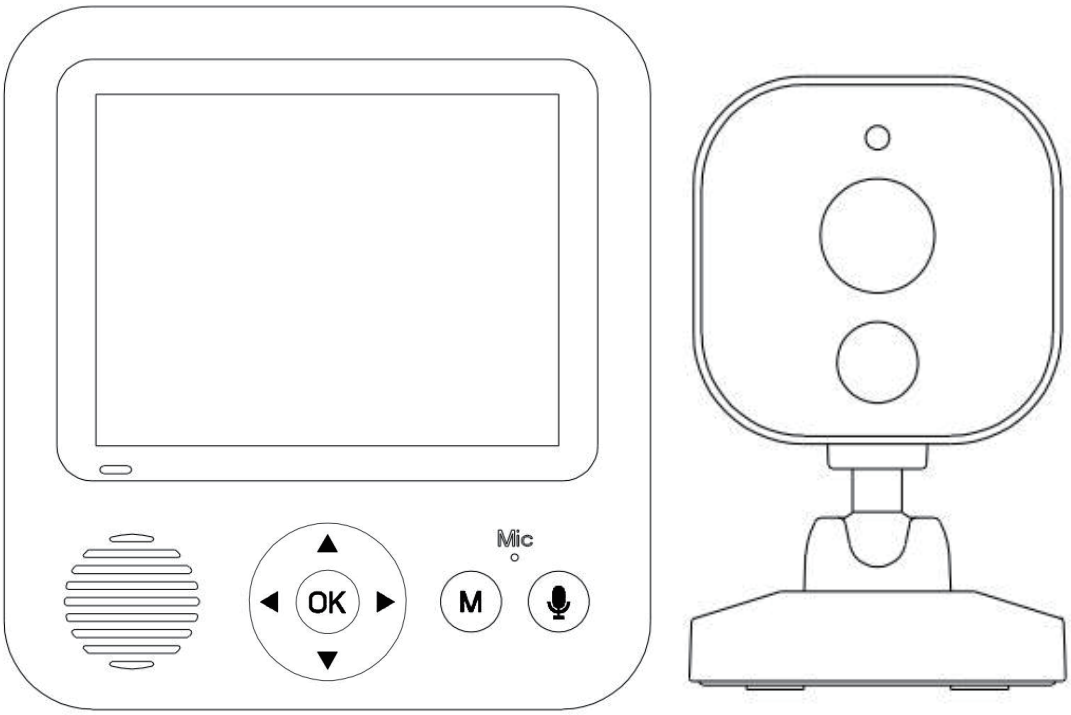

ABM900 User Manual

Dear Customer,

We are truly grateful that you have chosen us as your best product dealer. You are our most highly valued customers and it has been a sincere pleasure serving you. We hope that you will enjoy the fantastic quality of our products and services. We will continue our efforts to meet your requirements and expectations in the future as well. Your suggestions will help us shape our business to perfectly fit your standards.

This user's manual can help you have a thorough understanding of this product, and solve any problem that customers may encounter in using our products. Please read carefully for the user guide before using the device.

☠ Warning

DANGER - Keep the adapter cable away from the baby to avoid a choking hazard from entangling the baby's neck.

Keep the baby camera unit and cable out of the reach of children more than 3 feet or 1 meter away.

Do not place the camera or power supply in a child's cot/crib.

Camera settings and usage

- Fix the camera in a place where can be observed well of children/babies.
- Place the camera on a flat surface such as a dressing table, writing desk or shelf.

This baby monitor meets all relevant standards related to electromagnetic fields and is safe to use when operating in accordance with the instructions of the user guide. Therefore, please read the user guide carefully before using the device.

- Must be assembled by an adult.

- This baby monitor can not be used instead of adult guardianship.
- Keep this user guide in a safe place for future reference.
- Do not cover the baby monitor with a towel or blanket.
- Do not use the baby monitor near water.
- Do not install the baby monitor near a heat source.
- Only use the supplied charger and power adaptor. Never use another charger or power adaptor as this may damage the device.
- Do not touch the plug with a sharp or metal object.

Important notes for installing a baby monitor

- When using the camera and the displayer, it’s a must to be able to establish a wireless communication between them. The communication distance between the two devices is affected by environmental conditions.
- Any large metal objects between two devices may block wireless signals,such as refrigerators, metal doors or reinforced concrete.
- The strength of the signal may be attenuated by other solid buildings (such as walls), radios or electrical equipment (such as televisions, computers).
- If the signal lost, try to move the device to a different location indoors.
- Do not place the displayer and the camera in a range of **1.5** meter, otherwise it will cause howling.

Product list：

1 * Camera

1 * Displayer

1 * User Manual

2 * Power Adapter+ power-charging cable

（Longer charging cable for camera）

Please use a D C 5V adapter, preferably the original one.

INDEX

1.1 DISPLAYER OVERVIEW..... 5
1.2 DISPLAYER STATUS BAR ICON..... 6
1.3 DISPLAYER MENU ICON..... 6
1.4 CAMERA OVERVIEW.....7
2.1 HOW TO TURN ON DEVICE..... 7
2.2 PAIRING..... 7
2.3 CHECKING THE IMAGE OF BABY CAMERA.....8
3.1 CAMERA BUTTON FUNCTION..... 8
3.2 NIGHT VISION MODE..... 9
3.3 INSTALLATION.....9
4.1 INTERCOM MODE.....9
4.2 VOLUME ADJUSTMENT.....9
4.3 FEEDING REMINDER (ALARM)..... 9
4.4 LULLABY.....10
4.5 SYSTEM TIME SETTING.....10
4.6 TEMPERATURE DISPLAY.....10
4.7 CAMERA DISPLAY SELECTION..... 11
4.8 VOX SETTING..... 12
4.9 DISPLAY BRIGHTNESS.....12
5. CAMERA IMAGE ZOOM IN.....13
6. BUTTON SOUND.....13
7. POWER LEVEL..... 13
8. SIGNAL LEVEL.....13
9. CLEANING..... 13
10. FAQ & TROUBLESHOOTING..... 14
11. SPECIFICATION 15

1. PRODUCT OVERVIEW

1.1 DISPLAYER OVERVIEW

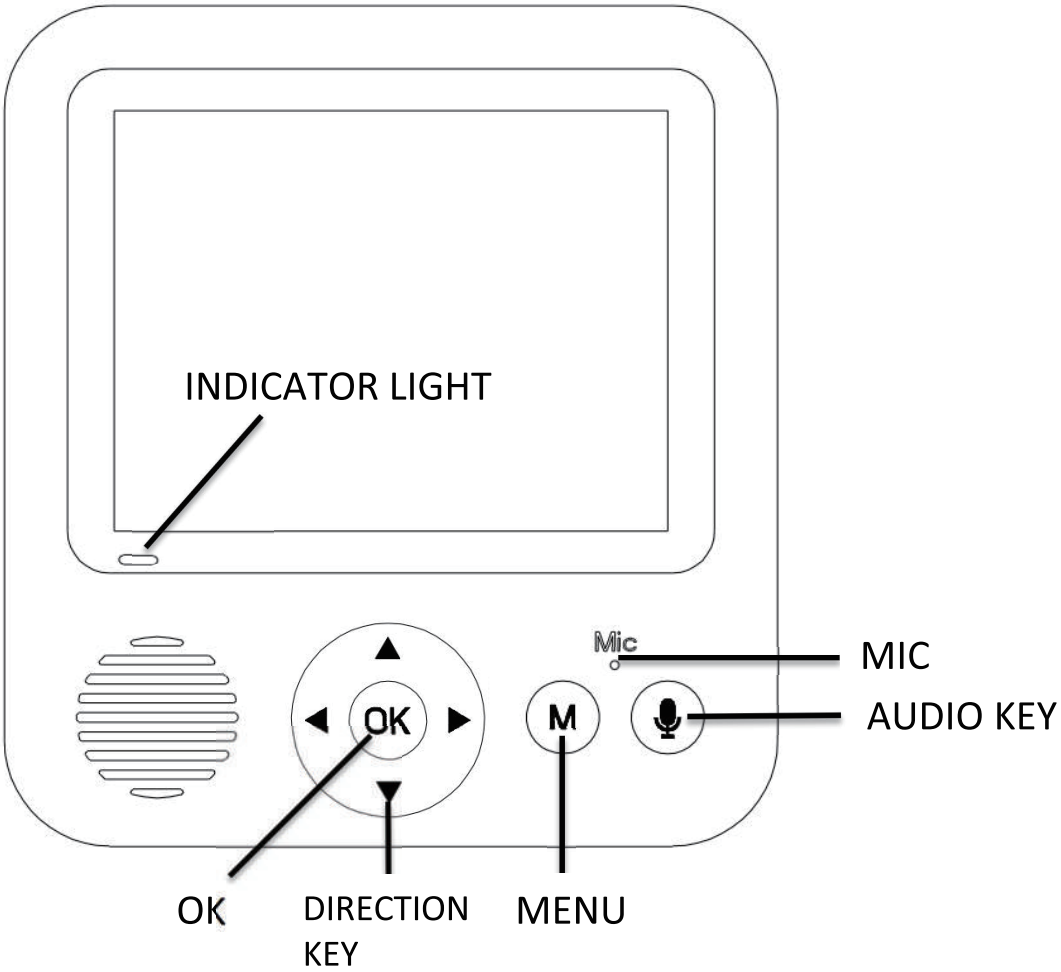

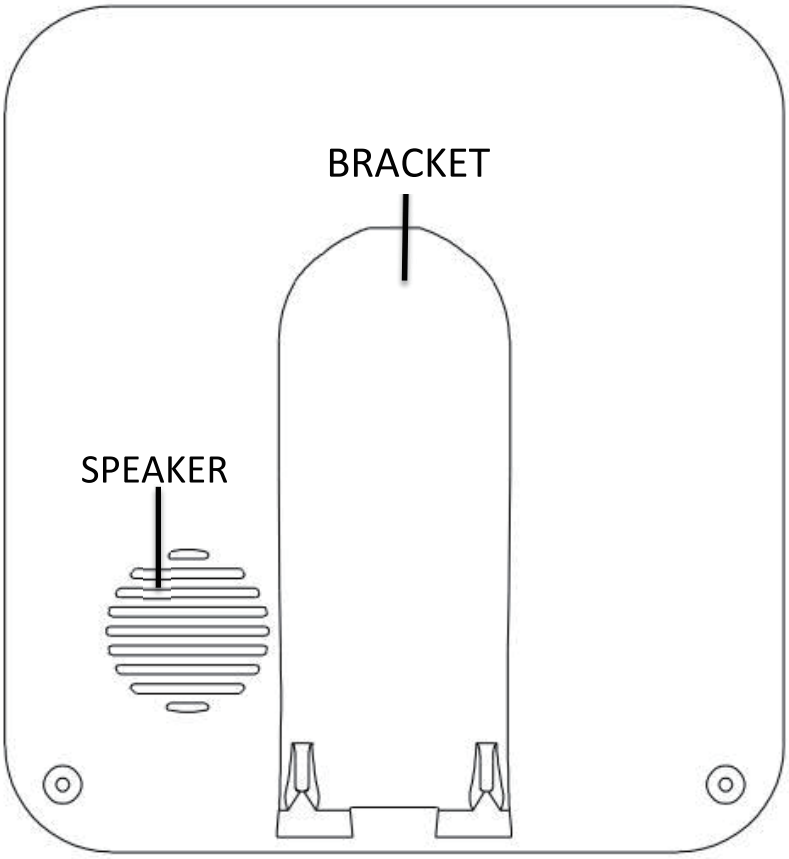

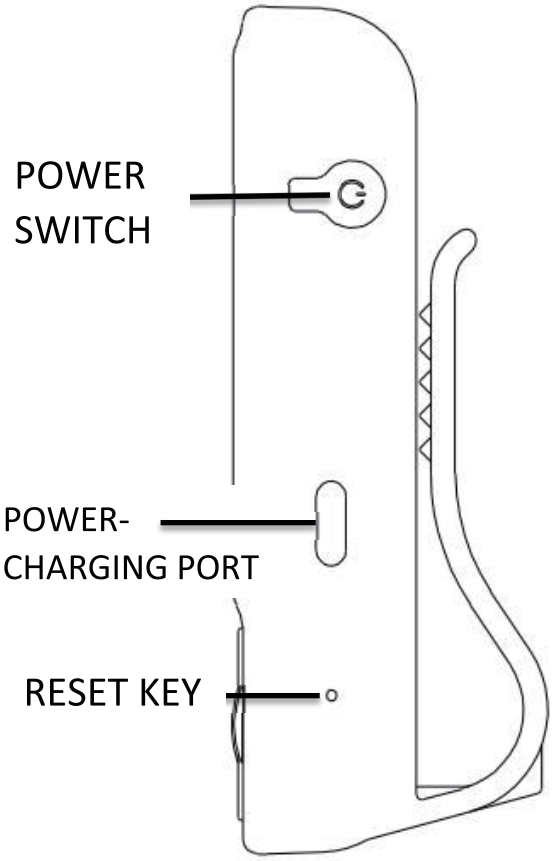

1.2 DISPLAYER STATUS BAR ICON

	SIGNAL LEVEL (5 Levels)
	NO SIGNAL
	CAMERA 1
	CAMERA 2 (customized)
	CAMERA IMAGE ZOOM IN 2 TIMES
	CAMERA SWITCH
	LULLABY TURN ON /OFF
	Volume setting (6 levels can be set)
	INTERCOM MODE
	NIGHT VISION MODE
VOX	CRYING DETECTION （HIGH,MED,LOW ）
24℃	BABY ROOM TEMPERATURE DISPLAY
05:51	SYSTEM TIME
	BATTERY POWER

1.3 DISPLAYER MENU ICON

	Volume setting (6 levels)	
	Feeding Reminder Time Setting （Can Set 5 Alarms）	OFF 0:30 1:00 2:00 3:00 4:00
	Lullaby Selection (8 Lullabies)	OFF ♪1 ♪2 ♪3 ♪4 ♪5 ♪6 ♪7 ♪8
	System Time Setting	00:00:00
	Temperature Setting (℃ / ℉ / Temperature alarm on and off)	℃ ℉ <20> <30>
	Camera Selection (add/delete/switch)	
VOX	VOX Sound Detection Setting	HIGH MID LOW OFF
	LCD brightness (6 levels)	
	Camera zoom in / out	

1.4 CAMERA OVERVIEW

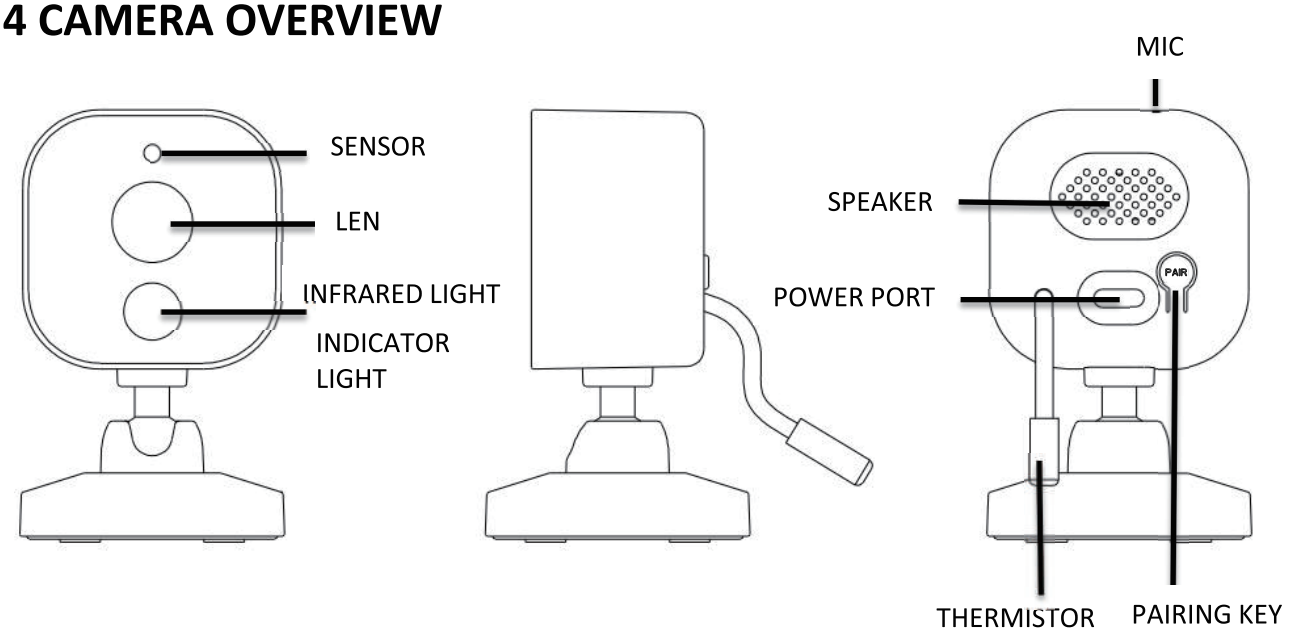

2. OPERATION

2.1 HOW TO TURN ON DEVICE

The baby monitor provides two power adaptors + power-charging cables. One is to connect the camera, and the other is to connect the displayer for charging battery.

(1) Connect the camera with power adaptor + cable, and plug the power adapter to the 110-240V AC outlet. The camera will automatically be turned on, and the blue indicator will be on (the night mode will automatically turn off), Connect the displayer with power adaptor + cable, and plug the power adapter to the 110-240V AC outlet. pressing the power key to turn on monitor.

(2) Press and hold the power button of the display device for 3 seconds to turn it on or off.

2.2 PAIRING

Once the camera and the displayer are both turned on, they will be paired automatically. If not, follow the steps as below:

(1) Turn on the displayer and press menu key M . Press < or > to select camera and press OK to confirm. In the pop-up bar, press ∧ button to select and press OK to confirm, and then press ∧ or ∨ to choose 1 or 2 to pair. At this time, the blue indicator light of the display device will flash and a prompt Keep pressing the button of the camera for three seconds to pair will appear on the display device

screen, the blue indicator light stops blinking when the device is paired successfully.

If no device is paired for 30 seconds, it will automatically exit the pairing mode, or you can press and hold for 1.5 seconds within 30 seconds to exit the pairing mode directly.

(2) When the camera is connected to the power supply and turned on, Press and hold the pairing key for 3 seconds, and then the blue light will flash quickly. It means that the camera is now in the pairing mode. Once the camera has connected with the displayer, the indicator light will turn off. Now the displayer can show the image that the camera captures.

If there is no device pairing for 1 minute, it will automatically exit the pairing mode.

(Note: One camera can only be connected to one monitor. If the pairing fails several times in a row, please contact the after-sales service or local dealer.)

2.3 CHECKING THE IMAGE OF BABY CAMERA

When both the camera and the displayer are normally turned on, the displayer should be able to show the image from the camera (If the displayer does not show the image properly, please check the pairing condition.).

(1) If the connection fails, please re-pair according to the **2.2 PAIRING** instruction.

(2) Press the key M to enter the menu, and select the camera you want to watch.

3. CAMERA USE

3.1 Camera button function

Keep pressing the button for 3 seconds to enter the pairing mode. Quit the pairing mode in 1 minute.

3.2 NIGHT VISION MODE

The camera is equipped with 1 pcs high-intensity infrared LED light, which helps to capture clear images in the dark. When the built-in optical sensor detects that the ambient light is weak, the infrared LED will become automatically light up. The screen of the displayer will be shown in black and white color, and the icon will be displayed in the status bar at the top of the screen.

3.3 INSTALLATION

(1) Place the camera at the area you want to monitor.

(2) Adjust the camera view angle by turning the camera up, down, left or right until a satisfactory image is obtained on the displayer.

4. THE DISPLAYER MENU

4.1 INTERCOM MODE

Please press the key if you want to enter the two-way talkback mode, and then you can talk with your little baby. And release the key when the conversation is over. Meanwhile, the camera system will enter intercom mode after releasing the key of the displayer.

4.2 VOLUME ADJUSTMENT

There are two ways to adjust the volume.

(1) In the main interface, short press the key < or > to adjust volume in a shortcut way.

(2) Or press the key M to pop up the menu. Press the key < or > to choose , and press the key OK to confirm to enter the volume mode. And then press press < or > button to adjust volume of the camera. The volume has 6 levels for option.

4.3 FEEDING REMINDER (ALARM)

(1) Press the key M to enter the main menu.

(2) Press the key < or > to choose , and press the key OK to confirm.

(3) Press the key ∧ or ∨ to select the alarm time for the feeding reminder(0.5h、1h、2h、3h、4h). Press the key M to return to the previous step.

If the alarm time is set, the displayer will beep every 0.5h/1h/2h/3h/ 4h, and the flashing feeding mark will appear on the screen. Press any key to cancel feeding reminder.

4.4 LULLABY

(1) Press the key M to enter the main menu.

(2) Press the key < or > to choose ♪, and press the key OK to confirm.

(3) In the pop-up menu bar, press the key ∧ or ∨ to select the lullaby, and press the key OK to confirm. To play all the music in a loop, select ♪ and press the key OK to confirm. Press the key M to return to the previous step.

4.5 SYSTEM TIME SETTING

(1) Press the key M to enter the main menu.

(2) Press the key < or > to choose ⏲, and press the key OK to confirm.

(3) In the pop-up menu bar, press the key OK to choose in turn the hour,minute,second, and press the key < or > to adjust in turn the hour,minute,second. Press the key M to return to the previous step after completing the system time setting.

4.6 TEMPERATURE DISPLAY

(1) Press the key M to enter the main menu.

(2) Press the key < or > to 🌡, and press the key OK to confirm.

(3) In the pop-up menu bar, press the key ∧ or ∨ button to select ℃ or ℉, and press the key OK to confirm. Press the key M to return to the previous step.

(4) Press the key ^ or v in the pop-up bar menu, select and press the key OK to enter the sub-menu of setting the alarming temperature < 2 8 >.

Press the key ^ and v to choose to set the high or low warning temperature.

Press the key < and > to set the temperature value to be warned (℃ setting range 28℃~37℃, ℉setting range 82℉~98℉). If the current ambient temperature is higher than the set warning temperature, the system automatically prompts a high temperature warning.

Do the same to set the low warning temperature (℃ setting range 0℃~26℃, ℉ setting range 32℉~78℉). If the current ambient temperature is lower than the warning temperature, the system automatically prompts a low temperature warning.

(5) The screen status bar will show the temperature from the temperature sensor at the back of the camera. If the temperature is higher than the high warning temperature, the temperature reading will become red, and the red mark will appear on the screen. If the temperature is lower than the low warning temperature, the temperature reading will become blue, and the blue mark will appear. Meanwhile, above or below the set temperature will emit BB.alarm sound, and press any key to cancel BB.sound. If the temperature is not restored to the set temperature range, the BB alarm sound will still be emitted 30 seconds later.

4.7 CAMERA DISPLAY SELECTION

(1) Press the key M to enter the main menu.

(2) Press the key < or > to choose , and then press the key OK to enter the sub-menu .

(3) Select , and press the key OK to choose or for pairing. After the pairing is successful, the displayer will show the image from or .

(4) Select to enter delete mode, and then press OK to delete or . If delete successfully, no-camera-connection will be reminded.

(5) Select , and press the key OK to see the sub-menu, and choose the or to view the image. Or you can choose to enter cyclic mode, and the image from the cam1 or cam2 will switch in every 15 seconds.

4.8 VOX SETTING

VOX detection: Turn on the VOX mode, and the display screen will become light off in 30 seconds when the camera side is in silent. When the ambient volume of the camera is louder than the set value, the displayer screen will become light up.

(1) Press the key M to enter the main menu.

(2)Press the key < or >, and press OK to enter VOX mode.

(3) Select LOW MID HIGH or press OFF button to turn off VOX mode.

(4) Even in the VOX-off mode, short press the key to enter VOX mode in a shortcut way (the screen will be turned off , but it will keep transferring sound from the camera).

Note: At the status of VOX-off, press the key , and the displayer screen will become light off. The sound from the camera is still heard at any time. This mode is suitable while the baby is playing but the adult needs to leave for a while.

When the VOX mode is turned on, the screen and sound will be turned off in 30 seconds when the camera side is in silent . When the ambient sound of the camera is louder than the set value, the display screen will become light up and the speaker will make a sound. This mode is suitable to use at night.

4.9 DISPLAY BRIGHTNESS

(1) In the main interface, press the key ∧ or ∨ to adjust the display brightness in a shortcut way.

5 CAMERAM ZOOM IN

（1） Press the key M to enter main menu.

(2) Press the < or > , and choose , and then press the key OK to zoom in and the mark will appear. Press the key OK again to recover to the original image size.

6. BUTTON SOUND

Pressing the key M for 5 seconds on the displayer interface to turn off the button sound. Keep pressing the key M again for 5 seconds again to turn on the button sound.

7. POWER LEVEL

The mark shows the current power level. The mark is lower power level, and will prompt LOW BATTERY. After the 5 consecutive beep sound , the beep sound will disappear, and only keep reminding LOW BATTERY.

8. SIGNAL

(1) Signal mark. If there is a large signal tower base station or high power signal interference equipment in the current environment, it may cause interference to the product, and the mark appears. When the signal has been disconnected for 5 seconds, the mark will appear and flashes, and the monitor will make beep sound for 5 times. After the 5 times of beep sound, the monitor will only leave the mark flashing. Now the monitor is disconnected with the camera.

9. CLEANING

Clean the device with a slightly damp cloth or an antistatic wipe. Never use detergents or abrasive solvents.

Cleaning and maintenance

- Do not use thinner, other solvents or chemicals to clean any part of the product, which will result in damage to the product. This damage is not covered by the warranty.
- Do not expose the product to high temperatures, humidity, or strong sunlight, and do not get it wet.

10. FAQ & TROUBLESHOOTING

1. Q: Why is the signal in the room is bad?

A: a. Check if the receiving antenna of the displayer terminal is turned on;

b. Due to different wall materials of different houses, the blocking of 2.4G signals is different. When the signal is not satisfied, the position can be adjusted.

2. Q:Why there is always some noise in the background?

A:It is impossible to eliminate all the noise. This kind of howling has always been a problem in the audio field. Please keep the displayer and the camera separate in 1.5 meters away or more.

Tip: The microphone of the receiver and camera cannot be the opposite. That is the reason why some users get confused when they operate the devices and always get noise in the background. This phenomenon is an uncontrollable factor.

3.Q:Why the temperature is not precision shown on the screen?

A:a. There is a difference in indoor air circulation.

b. The temperature sensor just placed in a new environment, and there will be a deviation within two hours.

4.Q:How to eliminate howling?

A:Please keep your receiver and camera separate in 1.5 meters away or more.

Tip: The microphone of the receiver and camera cannot be the opposite. That is the reason why some users get confused when they operate the devices and always get noise in the background. This phenomenon is an uncontrollable factor.

11. SPECIFIACATION

Technical Parameter			
Model	ABM900	Display size	2.8-Inch IPS
Sensor	CMOS 1/4	Camera	1280*720P
View Angle	60 Degree	Transmission method	2.4GHz FHSS
Battery	1500 mAh	Transmission distance	300M(Open Space)
Monitor power consumption	1.6W	Temperature detection	Support
Camera power consumption	1.5W	Cry reminder	Support
Working temperature	-20℃~65℃	Lullaby	Support
Material	ABS	Feeding reminder	Support
Monitor N.W		Night vision	Support
Camera N.W		Monitor size	88x81x19mm(L*W*T)
		Camera size	46x46x75mm(L*W*T)

FCC SDoC

NOTE: This equipment has been tested and found to comply with the limits for a Class B digital device, pursuant to part 15 of the FCC Rules. These limits are designed to provide reasonable protection against harmful interference in a residential installation. This equipment generates, uses and can radiate radio frequency energy and, if not installed and used in accordance with the instructions, may cause harmful interference to radio communications. However, there is no guarantee that interference will not occur in a particular installation. If this equipment does cause harmful interference to radio or television reception, which can be determined by turning the equipment off and on, the user is encouraged to try to correct the interference by one or more of the following measures:

—Reorient or relocate the receiving antenna.

—Increase the separation between the equipment and receiver.

—Connect the equipment into an outlet on a circuit different from that to which the receiver is connected.

—Consult the dealer or an experienced radio/TV technician for help.

FCC Statement:

This equipment has been tested and found to comply with the limits for a Class B digital device, pursuant to part 15 of the FCC Rules. These limits are designed to provide reasonable protection against harmful interference in a residential installation. This equipment generates, uses and can radiate radio frequency energy and, if not installed and used in accordance with the instructions, may cause harmful interference to radio communications. However, there is no guarantee that interference will not occur in a particular installation. If this equipment does cause harmful interference to radio or television reception, which can be determined by turning the equipment off and on, the user is encouraged to try to correct the interference by one or more of the following measures:

- Reorient or relocate the receiving antenna.
- In crease the separation between the equipment and receiver.

. Connect the equipment into an outlet on a circuit different from that to which the receiver is connected.

-Consult the dealer or an experienced radio/TV technician for help.

Caution: Any changes or modifications to this device not explicitly approved by manufacturer could void your authority to operate this equipment.

This device complies with part 15 of the FCC Rules. Operation is subject to the following two conditions: (1)This device may not cause harmful interference, and (2)this device must accept any interference received, including interference that may cause undesired operation.

RF Exposure Information:

This equipment complies with FCC radiation exposure limits set forth for an uncontrolled environment. This equipment should be installed and operated with minimum distance 20cm between the radiator &your body.