NILE Series - RENO

Bluetooth 5.0 + NFC-A Module

RENO module Datasheet

Version 1.0

Table of Contents

1 Overview 4
2 Features 5
2.1 RENO Features 5
3 Module block Diagram 6
4 Pin Definition 7
4.1 Pin-out 7
4.2 Pin Table 8
5 Electrical Specifications 10
5.1 Absolute maximum ratings 10
5.2 Recommended operating conditions 11
5.3 Performance specifications 12
5.3.1 Radio performance specifications 12
5.3.2 NFC Power and Performance 13
6 Functional description 14
6.1 Clocks 14
6.2 RESET pin 14
6.3 Security 14
6.3.1 AAR — Accelerated address resolver 14
6.3.2 CCM — AES CCM mode encryption 15
6.3.3 CRYPTOCELL 15
6.3.4 ECB — AES electronic codebook mode encryption 16
6.3.5 RNG — Random number generator 16
6.4 Digital Interfaces 16
6.4.1 UART 16
6.5 GPIO 17
6.6 NFCT — Near field communication tag 17
6.6.1 Battery protection 18
6.7 Antenna Interface 18
7 Power management 19
7.1 Power Supply options 19
7.2 Deepsleep mode 19

7.3 Current consumption numbers 19
8 Software architecture 20
8.1 Overview 20
8.2 Features 20
8.3 Software Block diagram 21
8.4 Software development 21
9 Package Description 22
9.1 Mechanical characteristics 22
9.2 Landing pattern 22
9.3 Physical Dimensions and pad Location 22
10 Regulatory qualifications and approvals 22
11 Product Shipping, Storage and Handling 22
11.1 Package Information 22
11.2 Storage and Baking Instructions 22
11.3 Mounting process and soldering recommendations 23
12 Product label and ordering information 23
12.1 Part Ordering 24
Contact Information 24

Table of Figures

Figure 1: Block diagram 6
Figure 2: RENO Module pin out 7
Figure 3: NFCT Antenna tuning 18
Figure 4: RENO Software Block Diagram 21
Figure 5: Module Label 23

Table of Tables

Table 1: RENO Pin Table 10
Table 2: Absolute maximum ratings 11
Table 3: Recommended operating conditions 11
Table 4: General radio characteristics 12
Table 5: Receiver characteristics 12
Table 6: Transmit characteristics 13
Table 7: RSSI 13
Table 8: NFCT power 13
Table 9: NFCT electrical specification 14
Table 10: Current consumption numbers 19
Table 11: Mechanical characteristics 22
Table 12: Module Label Description 24
Table 13: Part Ordering for RENO module 24
Table 14: Part Ordering for RENO EVK/DVK 24

1 Overview

RENO is a highly integrated ultra-low-power certified wireless radio module supporting full featured Bluetooth 5.0 (Bluetooth Low Energy). RENO module is based on Nordic nRF52840 SoC. By integrating complete wireless hardware and software in a small form factor, this module enables users to add wireless with minimal host load and reduces the total system cost.

These fine-tuned RF and certified modules deliver high performance for user devices. This globally certified module reduces user's time to market with integrated wireless stacks, network stack, and all the advanced security features (ARM Trust Zone Cryptocell-310). This module supports host interface for easy integration of the wireless connectivity in various Internet of Things verticals like Wearable's, Home automation, Industrial IoT and Smart medical.

This module communicates with external host through UART interface using Ivativ Host Interface Software (IVHIS).

Module specifications

- Wireless Protocols: Bluetooth 5 and NFC-A
- Frequency: 2.402 – 2.480 GHz
- On-air Data rates:
  - Bluetooth 5 - 2Mbps, 1Mbps, 500kbps, 125kbps
  - NFC – 106 kbps
- Security Features: Secure boot and all security features of BLE specification
- Antenna options: PCB antenna or MHF4 connector
- Operating modes: BLE
- Programmable output power: -20dBm to +8dBm
- Receive Sensitivity: Bluetooth 5
  - -103dBm at 125kbps
  - -99dBm at 500kbps
  - -96dBm at 1Mbps
  - -92dBm at 2Mbps
- Current consumption:
  - 450nA – Deep sleep mode
  - 1.1mA – TX at 8dBm output power
- GPIO: Up to 26 configurable
- Range > 1400 meters (Line of Sight)
- Power supply and operating voltage range: 1.7v to 5.5v, Integrated DC-DC and LDO
- Temperature: -40°C to 85°C
- Humidity: 5-90% non-condensing
- Package: 10 mm x 15 mm x 1.6 mm (including shield), 0.5mm pitch

2 Features

2.1 RENO Features

- Full featured Bluetooth Low Energy 5.0 (BLE)
- Support for UART to interface with host MCU.
- Easy to use AT commands set and Binary APIs to develop applications on host MCU with minimal porting effort
- Highlights of Ivativ APIs and AT commands
    - Ready to use on all popular MCUs with minimal porting effort
    - Seamless integration for RTOS or bare-metal based user application
    - Agnostic to underlying SoC / Chipset and its respective SDKs / firmware
    - Secure boot enabled
- Highly optimized hardware for ultra-low power consumption with excellent performance
- BLE secure connections and privacy
- NFC tag
- 2 x UART
- 1 x NFC A Tag

Certifications

- Regulatory certifications - FCC/IC, ETSI
- BT SIG 5 product level (module) certification

Full Featured Bluetooth 5

It supports all Bluetooth 5 features including long range (125kbps and 500kbps), 2M and advertising extensions

Processing power and flash flexibility

The RENO incorporates the powerful ARM Cortex-M4 CPU with Floating Point Unit (FPU) running at 64 MHz enabling the most demanding applications with complex arithmetic requirements to be realized in a single chip solution.

It has got a flash-based SoC and offers all the flexibility associated with using flash memory. It supports Over-The-Air Device Firmware Updates (OTA-DFU) when it is in the field.

On-chip NFC tag support

This module includes a passive NFC tag functionality. It works at 13.56MHz with a data rate of 106kbps. An external NFC reader can read and write data to the module through this interface. Module can’t initiate NFC communications or read other NFC tags. This interface can be used to wake-on-field to wake up the module from deep sleep enabling low power applications. Can be used OOB (out of band) pairing with Bluetooth applications to simplify the authentication by carrying authentication information on NFC link.

NFC Applications:

- Advanced high-performance wearable's
- Wearables for secure payments
- Virtual Reality/Augmented Reality systems
- Smart Home sensor networks
- Smart city sensor networks
- High performance HID controllers
- Internet of Things (IoT) sensor networks
- Smart door locks
- Connected white goods

3 Module block Diagram

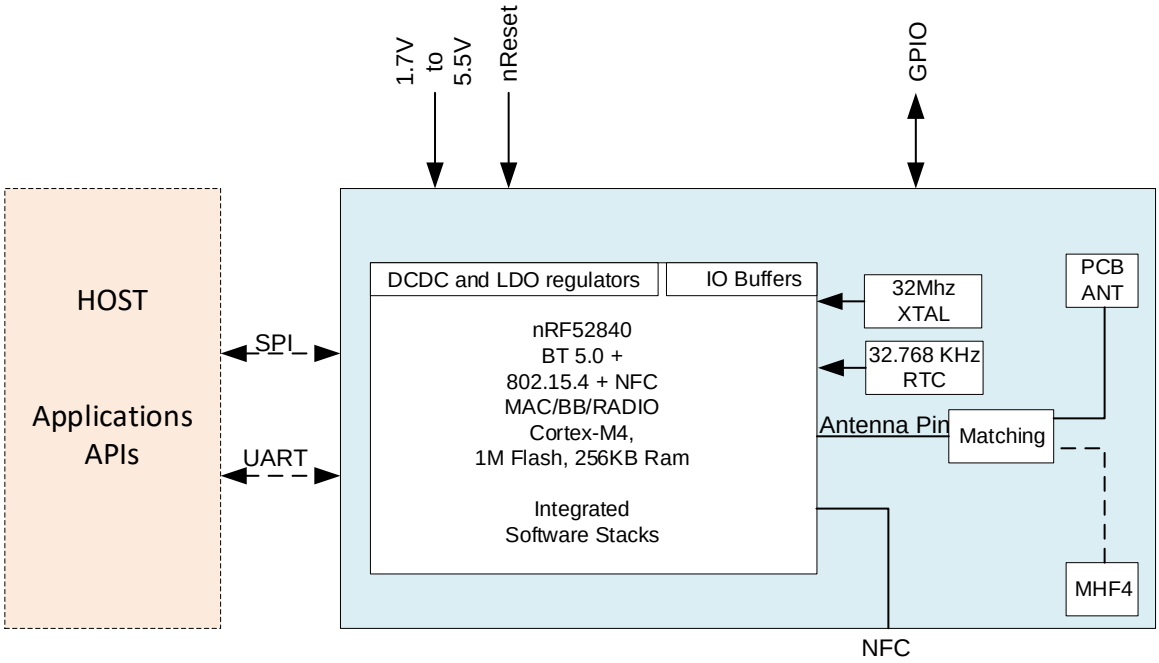

Figure 1: Block diagram

4 Pin Definition

4.1 Pin-out

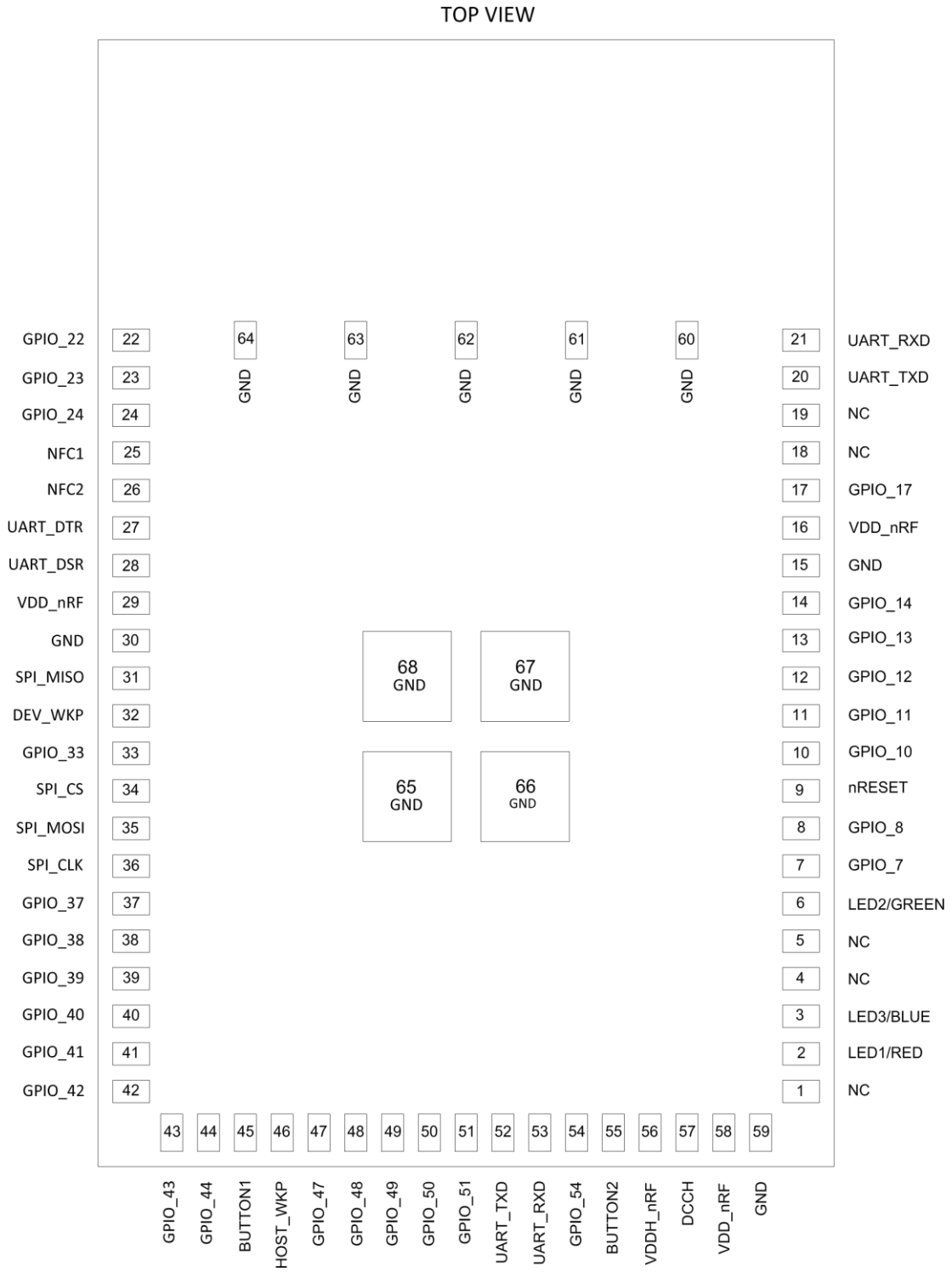

Figure 2: RENO Module pin out

4.2 Pin Table

Note: Unless mentioned specifically, any GPIO can be configured to required digital or analog interface.

Pin Number	RENO Pin Name	Pin Type	Description
1	NC		No Connect
2	LED1/RED	O	System status signal. Active low.
3	LED3/BLUE	O	System status signal. Active low.
4	NC		No Connect
5	NC		No Connect
6	LED2/GREEN	O	System status signal. Active low
7	GPIO_7	I/O	General purpose IO
8	GPIO_8	I/O	General purpose IO
9	nReset	I	Active low reset
10	GPIO_10	I/O	General purpose IO
11	GPIO_11	I/O	General purpose IO
12	GPIO_12	I/O	General purpose IO
13	GPIO_13	I/O	General purpose IO
14	GPIO_14	I/O	General purpose IO
15	GND	Ground	Ground
16	VDD_nRF	Power	3.3V DCDC output Power supply. When 5V input is used, this pin can supply 3.3V accessories (max 20mA drive)
17	GPIO_17	I/O	General purpose IO
18	NC		No Connect
19	NC		No Connect
20	UART_TXD	O	UART TX Data
21	UART_RXD	I	UART RX Data
22	GPIO_22	I/O	General purpose IO. Recommended for Standard drive, low frequency I/O
23	GPIO_23	I/O	General purpose IO
24	GPIO_24	I/O	General purpose IO
25	NFC1	I	NFC Antenna Connection
26	NFC2	I	NFC Antenna Connection
27	UART_DTR	O	UART DTR
28	UART_DSR	I	UART DSR
29	VDD_nRF	Power	3.3V DCDC output Power supply. When 5V input is used, this pin can supply 3.3V accessories (max 20mA drive)
30	GND	Ground	Ground
31	SPI_MISO	O	SPI MISO

32	DEV_WKP	I	General purpose IO to wake up the module from standby mode.
33	GPIO_33	I/O	General purpose IO. Recommended for Standard drive, low frequency I/O
34	SPI_CS	I	SPI Chip Select
35	SPI_MOSI	I	SPI MOSI
36	SPI_CLK	I	SPI Clock
37	GPIO_37	I/O	General purpose IO. Recommended for Standard drive, low frequency I/O
38	GPIO_38	I/O	General purpose IO. Recommended for Standard drive, low frequency I/O
39	GPIO_39	I/O	General purpose IO. Recommended for Standard drive, low frequency I/O
40	GPIO_40	I/O	General purpose IO. Recommended for Standard drive, low frequency I/O
41	GPIO_41	I/O	General purpose IO. Recommended for Standard drive, low frequency I/O
42	GPIO_42	I/O	General purpose IO. Recommended for Standard drive, low frequency I/O
43	GPIO_43	I/O	General purpose IO
44	GPIO_44	I/O	General purpose IO
45	BUTTON1	I	Active low button input 1
46	HOST_WKP	O	General purpose IO to wake up the host from sleep
47	GPIO_47	I/O	General purpose IO
48	GPIO_48	I/O	General purpose IO
49	GPIO_49	I/O	General purpose IO
50	GPIO_50	I/O	General purpose IO
51	GPIO_51	I/O	General purpose IO
52	UART_TXD	I/O	UART TX data
53	UART_RXD	I/O	UART RX data
54	GPIO_54	I/O	General purpose IO
55	BUTTON 2	I	Active low button input 2
56	VDDH_nRF	Power	5V external supply
57	DCCH	Power	First DCDC (5V to 3.3V) output. Add a 10uH between this pin and pin 16 when 5V DCDC is enabled
58	VDD_nRF	Power	3.3V DCDC output Power supply. When 5V input is used, this pin can supply 3.3V accessories (max 20mA drive)
59	GND	Ground	Ground pad
60	GND	Ground	Ground pad
61	GND	Ground	Ground pad
62	GND	Ground	Ground pad
63	GND	Ground	Ground pad

64	GND	Ground	Ground pad
65	GND	Ground	Ground pad
66	GND	Ground	Ground pad
67	GND	Ground	Ground pad
68	GND	Ground	Ground pad

Table 1: RENO Pin Table

5 Electrical Specifications

5.1 Absolute maximum ratings

Maximum ratings are the extreme limits to which the chip can be exposed for a limited amount of time without permanently damaging it. Exposure to absolute maximum ratings for prolonged periods of time may affect the reliability of the device.

Parameter	Min.	Max.	Units
Supply voltages			
VDD	-0.3	+3.9	V
VDDH	-0.3	+5.8	V
VBUS	-0.3	+5.8	V
VSS		0	V
I/O pin voltage			
$V_{I/O}$, VDD <=3.6V	-0.3	VDD + 0.3	V
$V_{I/O}$, VDD >=3.6V	-0.3	3.9	V
NFC antenna pin current			
$I_{NFC1/2}$		80	mA
Radio			
RF input level		10	dBm
Environmental aQFN™ package			
Storage temperature	-40	+125	^{0}C

Moisture Sensitivity Level		2	
ESD Human Body Model		2	kV
ESD Human Body Model Class		2	
ESD Charged Device Model		750	V
Flash memory			
Endurance		10000	Write/erase cycles
Retention		10 years at 40^0C	

Table 2: Absolute maximum ratings

5.2 Recommended operating conditions

The operating conditions are the physical parameters that the module can operate within.

Symbol	Parameter	Min.	Nom.	Max.	Units
VDD	VDD supply voltage, independent of DCDC enable	1.7	3.0	3.6	V
VDD_{POR}	VDD supply voltage needed during power-on reset	1.75			V
VDDH	VDDH supply voltage, independent of DCDC enable	2.5	3.7	5.5	V
VBUS	VBUS USB supply voltage	4.35	5	5.5	V
t_{R_VDD}	Supply rise time (0 V to 1.7 V)			60	ms
t_{R_VDDH}	Supply rise time (0 V to 3.7 V)			100	ms
TA	Operating temperature	-40	25	85	^{0}C

Table 3: Recommended operating conditions

Important: The module power-on reset circuitry may not function properly for rise times longer than the specified maximum.

5.3 Performance specifications

5.3.1 Radio performance specifications

5.3.1.1 General radio characteristics

Symbol	Description	Min.	Typ.	Max.	Units
f_{op}	Operating frequencies	2360		2500	MHz
$f_{PLL,CH,SP}$	PLL channel spacing		1		MHz
$f_{DELTA,1M}$	Frequency deviation @1 Mbps		±170		kHz
$f_{DELTA,BLE,1M}$	Frequency deviation @BLE 1 Mbps		±250		kHz
$f_{DELTA,2M}$	Frequency deviation @2 Mbps		±320		kHz
$f_{DELTA,BLE,2M}$	Frequency deviation @BLE 2 Mbps		±500		kHz
fsk_{BPS}	On-the-air data rate	125		2000	kbps

Table 4: General radio characteristics

5.3.1.2 Receiver characteristics

Symbol	Description	Min.	Typ.	Max.	Units
$P_{RX,MAX}$	Maximum received signal strength at < 0.1% PER		0		dBm
$P_{SENS,IT,1M}$	Sensitivity, 1 Mbps nRFmode ideal transmitter[18]		-93		dBm
$P_{SENS,IT,2M}$	Sensitivity, 2 Mbps nRF mode ideal transmitter[19]		-89		dBm
$P_{SENS,IT,SP,1M,BLE}$	Sensitivity, 1 Mbps BLE ideal transmitter, packet length ≤ 37 bytes BER=1E-3[20]		-95		dBm
$P_{SENS,IT,LP,1M,BLE}$	Sensitivity, 1 Mbps BLE ideal transmitter, packet length ≥ 128 bytes BER=1E-4[21]		-94		dBm
$P_{SENS,IT,SP,2M,BLE}$	Sensitivity, 2 Mbps BLE ideal transmitter, packet length ≤ 37 bytes		-92		dBm
$P_{SENS,IT,BLE\ LE125k}$	Sensitivity, 125 Kbps BLE mode		-103		dBm
$P_{SENS,IT,BLE\ LE500K}$	Sensitivity, 500 Kbps BLE mode		-99		dBm

Table 5: Receiver characteristics

[18] Typical sensitivity applies when ADDR0 is used for receiver address correlation. When ADDR [1...7] are used for receiver address correlation, the typical sensitivity for this mode is degraded by 3 dB
[19] Typical sensitivity applies when ADDR0 is used for receiver address correlation. When ADDR [1...7] are Used for receiver address correlation, the typical sensitivity for this mode is degraded by 3 dB

[20]As defined in the Bluetooth Core Specification v4.0 Volume 6: Core System Package (Low Energy Controller Volume)

[21] Equivalent BER limit < 10E-04

5.3.1.3 Transmitter characteristics

Symbol	Description	Min.	Typ.	Max.	Units
P_{RF}	Maximum output power		8.0		dBm
P_{RFC}	RF power control range		28.0		dB
P_{RFCR}	RF power accuracy			±4	dB
$P_{RF1,1}$	1st Adjacent Channel Transmit Power 1 MHz (1 Mbps)		-24.8		dBc
$P_{RF2,1}$	2nd Adjacent Channel Transmit Power 2 MHz (1 Mbps)		-54.0		dBc
$P_{RF1,2}$	1st Adjacent channel Transmit Power 2 MHz (2 Mbps)		-25		dBc
$P_{RF2,2}$	2nd Adjacent Channel Transmit Power 4 MHz (2 Mbps)		-54.0		dBc
E_{VM}	Error vector magnitude IEEE 802.15.4		8		%rms

Table 6: Transmit characteristics

5.3.1.4 RSSI Specifications

Symbol	Description	Min.	Typ.	Max.	Units
$RSSI_{ACC}$	RSSI accuracy valid range -90 to -20 dBm		±2		dB
$RSSI_{RESOLUTION}$	RSSI resolution		1		dB
$RSSI_{PERIOD}$	RSSI sampling time from RSSI_START task		0.25		µs
$RSSI_{SETTLE}$	RSSI settling time after signal level change		15		µs

Table 7: RSSI

5.3.2 NFC Power and Performance

5.3.2.1 NFCT (Near Field Communication Tag)

Symbol	Description	Min.	Typ.	Max.	Units
I_{sense}	Current in SENSE STATE		100		nA
$I_{activated}$	Current in ACTIVATED STATE		400		µA

Table 8: NFCT power

5.3.2.2 NFCT Electrical Specification

Symbol	Description	Min.	Typ.	Max.	Units
f_c	Frequency of operation		13.56		MHz
C_{MI}	Carrier modulation index	95			%
DR	Data Rate		106		kbps
V_{sense}	Peak differential Field detect threshold level on NFC1 NFC2		1.2		Vp
I_{max}	Maximum input current on NFCT pins			80	mA

Table 9: NFCT electrical specification

6 Functional description

6.1 Clocks

Module integrates 32MHz and 32KHz crystals for hi-frequency clock (HFCLK, 64MHz) and low-frequency clock (LFCLK, 32KHz).

An integrated RC based low-frequency clock (LFRC) is also available with a reduced accuracy. LFRC needs calibration.

6.2 RESET pin

Module reset can be triggered by following methods

- Power on reset generator
- Pin reset
- Wake up from system off mode
- Soft reset
- Brownout reset

6.3 Security

This module integrates Nordic Semi's nRF52840 SoC. This SoC supports the following security functions which we use in our APIs that we provide to user.

6.3.1 AAR — Accelerated address resolver

Accelerated address resolver is a cryptographic support function for implementing the Resolvable Private Address Resolution procedure described in *Bluetooth Core Specification* v4.0. Resolvable Private Address generation should be achieved using ECB and is not supported by AAR.

The procedure allows two devices that share a secret key to generate and resolve a hash based on their device address. The AAR block enables real-time address resolution on incoming packets when configured as described in this chapter. This allows real-time packet filtering (whitelisting) using a list of known shared keys (Identity Resolving Keys (IRK) in *Bluetooth*).

6.3.2 CCM — AES CCM mode encryption

Cipher block chaining - message authentication code (CCM) mode is an authenticated encryption algorithm designed to provide both authentication and confidentiality during data transfer. CCM combines counter mode encryption and CBC-MAC authentication. The CCM terminology "Message authentication code (MAC)" is called the "Message integrity check (MIC)" in *Bluetooth* terminology and also in this document.

The CCM block generates an encrypted keystream that is applied to input data using the XOR operation and generates the four-byte MIC field in one operation. CCM and RADIO can be configured to work synchronously. CCM will encrypt in time for transmission and decrypt after receiving bytes into memory from the radio. All operations can complete within the packet RX or TX time. CCM on this device is implemented according to *Bluetooth* requirements and the algorithm as defined in IETF RFC3610, and depends on the AES-128 block cipher.

The *Bluetooth* specification describes the configuration of counter mode blocks and encryption blocks to implement compliant encryption for Bluetooth Low Energy.
The CCM block uses EasyDMA to load key counter mode blocks (including the nonce required), and to read/write plain text and cipher text.

The AES CCM peripheral supports three operations: keystream generation, packet encryption, and packet decryption. These operations are performed in compliance with the *Bluetooth* AES CCM 128-bit block encryption, see *Bluetooth Core specification Version 4.0*.

6.3.3 CRYPTOCELL

ARM® TrustZone® CryptoCell 310 (CRYPTOCELL) is a security subsystem which provides root of trust (RoT) and cryptographic services for a device.

The following cryptographic features are provided:

- True random number generator (TRNG) compliant with NIST 800-90B, AIS-31, and FIPS 140-2
- Pseudorandom number generator (PRNG) using underlying AES engine compliant with NIST 800-90A
- RSA public key cryptography
    - Up to 2048-bit key size
    - PKCS#1 v2.1/v1.5
    - Optional CRT support
- Elliptic curve cryptography (ECC)
    - NIST FIPS 186-4 recommended curves using pseudorandom parameters, up to 521 bits:
        - Prime field: P-192, P-224, P-256, P-384, P-521
    - SEC 2 recommended curves using pseudorandom parameters, up to 521 bits:
        - Prime field: secp160r1, secp192r1, secp224r1, secp256r1, secp384r1, secp521r1
    - Koblitz curves using fixed parameters, up to 256 bits:
        - Prime field: secp160k1, secp192k1, secp224k1, secp256k1
    - Edwards/Montgomery curves:
        - Ed25519, Curve25519
    - ECDH/ECDSA support

- Secure remote password protocol (SRP)
  - Up to 3072-bit operations
- Hashing functions
  - SHA-1, SHA-2 up to 256 bits
  - Keyed-hash message authentication code (HMAC)
- AES symmetric encryption
  - General purpose AES engine (encrypt/decrypt, sign/verify)
  - 128-bit key size
  - Supported encryption modes: ECB, CBC, CMAC/CBC-MAC, CTR, CCM/CCM* (CCM* is a minor variation of CCM)
- ChaCha20/Poly1305 symmetric encryption
  - Supported key size: 128 and 256 bits
  - Authenticated encryption with associated data (AEAD) mode
- The CRYPTOCELL subsystem has an internal always-on (AO) power domain for retaining device secrets when CRYPTOCELL is disabled

6.3.4 ECB — AES electronic codebook mode encryption

The AES electronic codebook mode encryption (ECB) can be used for a range of cryptographic functions like hash generation, digital signatures, and keystream generation for data encryption/decryption. The ECB encryption block supports 128-bit AES encryption (encryption only, not decryption).

AES ECB operates with EasyDMA access to system Data RAM for in-place operations on cleartext and ciphertext during encryption. ECB uses the same AES core as the CCM and AAR blocks, and is an asynchronous operation which may not complete if the AES core is busy.

6.3.5 RNG — Random number generator

The Random number generator (RNG) generates true non-deterministic random numbers based on internal thermal noise that are suitable for cryptographic purposes. The RNG does not require a seed value.

6.4 Digital Interfaces

6.4.1 UART

UART is a 4-wire serial interface which supports hardware flow control and baud rate up to 1Mbps.

The following UART signals are mapped to physical pins using configuration registers PSEL.RXD, PSEL.CTS, PSEL.RTS, and PSEL.TXD when UART is disabled and used when UART is enabled.

TXD	-	Module output, should be connected to RXD of other device
RXD	-	Module input, should be connected to TXD of other device
RTS	-	Module output, active low flow control signal, set when module can receive data, connected to CTS of other device
CTS	-	Module input, active low flow control signal, module sends data if CTS is set,

connected to RTS of other device

Features:

- Full-duplex operation. LSB transmitted first while frame transmission.
- Automatic hardware flow control
- Parity checking and generation for the 9th data bit
- UART uses one or two stop bits.
- UART can be used with EasyDMA for direct data transfer from/to RAM.
- Disable all peripherals that have the same ID as UART. It is important to configure all relevant UART registers explicitly before using UART to ensure proper operation.

Note: Level conversion must be added to use with RS232 level compliant interface.

6.5 GPIO

- This module supports 26 GPIO pins.
- User can configure GPIO for additional functionality like Buttons and LEDs

6.6 NFCT — Near field communication tag

The NFCT peripheral is an implementation of an NFC Forum compliant listening device NFC-A.

Listed here are the main features for the NFCT peripheral:

- NFC-A listen mode operation
  - 13.56 MHz input frequency
  - Bit rate 106 kbps
- Wake-on-field low power field detection (SENSE) mode
- Frame assemble and disassemble for the NFC-A frames specified by the NFC Forum
- Programmable frame timing controller
- Integrated automatic collision resolution, cyclic redundancy check (CRC), and parity functions

To use NFC in RENO, configure pins GPIO25 and GPIO 26 as NFC1 and NFC 2. It will damage the device if you connect the NFC antenna without configuring the pins.

Connect the NFC antenna differentially between the 2 terminals and use external tuning capacitors for best performance.

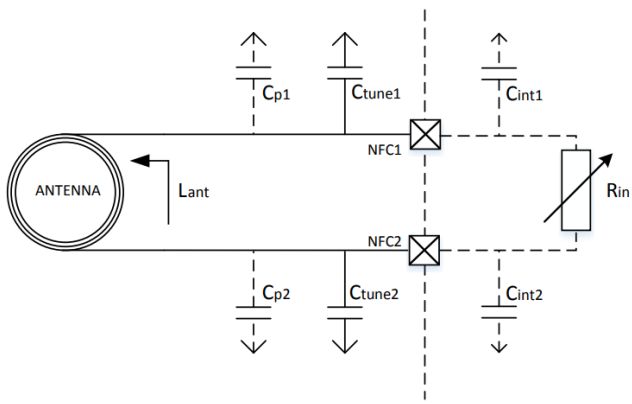

Figure 3: NFCT Antenna tuning

The required tuning capacitor value is given by the below equations:

$$C'_{tune} = \frac{1}{(2\pi \cdot 13.56\ MHz)^2 \cdot L_{ant}} \quad where\ C'_{tune} = \frac{1}{2} \cdot (C_p + C_{\text{int}} + C_{tune})$$

$$and\ C_{tune1} = C_{tune2} = C_{tune} \qquad C_{p1} = C_{p2} = C_p \qquad C_{\text{int1}} = C_{\text{int2}} = C_{\text{int}}$$

$$C_{tune} = \frac{2}{(2\pi \cdot 13.56\ MHz)^2 \cdot L_{ant}} - C_p - C_{\text{int}}$$

C_{int} is approximately 4pf. An antenna inductance of Lant = 2 µH will give tuning capacitors in the range of 130 pF on each pin. The total capacitance on NFC1 and NFC2 must be matched. Please check the APP note 'NFC antenna tuning' by Nordic Semiconductor for more information on how to tune antenna.

6.6.1 Battery protection

If the antenna is exposed to a strong NFC field, current may flow in the opposite direction on the supply due to parasitic diodes and ESD structures. If the battery used does not tolerate return current, a series diode must be placed between the battery and the device in order to protect the battery.

6.7 Antenna Interface

RENO module comes with PCB antenna or MHF4 connector. Check with 'NILE series Module Integration Guide (MIG)' for design guide lines to integrate these modules for high performance.

7 Power management

This module employs power and resource management to maximize application energy efficiency and battery life. The supply range between 1.7V and 5.5V, supports primary and secondary cell battery technologies and direct USB supply without the need for external regulators.

7.1 Power Supply options

RENO modules support multiple power supply options with a built-in DCDC and/or LDO (selected by software configuration).

Normal voltage option: (1.7V to 3.6V)
RENO will be in this mode when power is connected to both VDDH_nRF and VDD_nRF at the same time.

High voltage option: (2.5V to 5.5V)
RENO will be in this mode when power is connected to VDDH_nRF only. In this mode VDD_nRF can be used to supply power to attached peripherals (max 30 amp when module is ON).

7.2 Deepsleep mode

Deepsleep is the lowest power saving mode the module can enter. In this mode, the system's core functionality is powered down and all ongoing tasks are terminated. When in Deepsleep mode, the device can be woken up through a reset.

7.3 Current consumption numbers

S.no	Case	Min.	Typ.	Max.	Units
1	Deepsleep, no RAM retention, wake on reset	-	0.45	-	µA
2	TX only run current (DC/DC, 3V) PRF = 0 dBm	-	4.9	-	mA
3	RX only run current (DC/DC, 3V) 1 Mbps/1 Mbps BLE	-	4.7	-	mA

Table 10: Current consumption numbers

8 Software architecture

8.1 Overview

Ivativ provides AT commands and binary APIs for Ivativ Host Interface Software (IVHIS) over UART. This architecture uses s140 SoftDevice from Nordic Semiconductor. AT commands are issued from the external host to the RENO module over UART interface. User may use any serial terminals like Docklight or Putty, Mincom, Cutecom application to send AT commands.

This software allows BLE modules to advertise, scan and connect. It supports GATT server and Client features. Using this software user can configure BLE, perform 'Over the air firmware upgrade' and program GPIOs.

8.2 Features

- Bluetooth 5.0 compliant single-mode Bluetooth Low Energy protocol stack
    - Extended Advertising support
        - Advertising and scanning up to 255 bytes of advertising data in an advertising event
        - Advertising, scanning, and connecting on all supported PHYs
        - Anonymous advertising
    - Custom UUID support
    - Link layer supporting LE 1M PHY, LE 2M PHY, and LE Coded PHY
    - LL Privacy, including for the Extended Advertising modes
    - LE Data Packet Length Extension
    - ATT and SM protocols
    - L2CAP with LE Credit-based Flow Control
    - LE Secure Connections pairing model
    - GATT and GAP APIs
    - GATT Client and Server
    - Configurable ATT MTU
- Master Boot Record for over-the-air device firmware update
    - SoftDevice, application, and bootloader can be updated separately

8.3 Software Block diagram

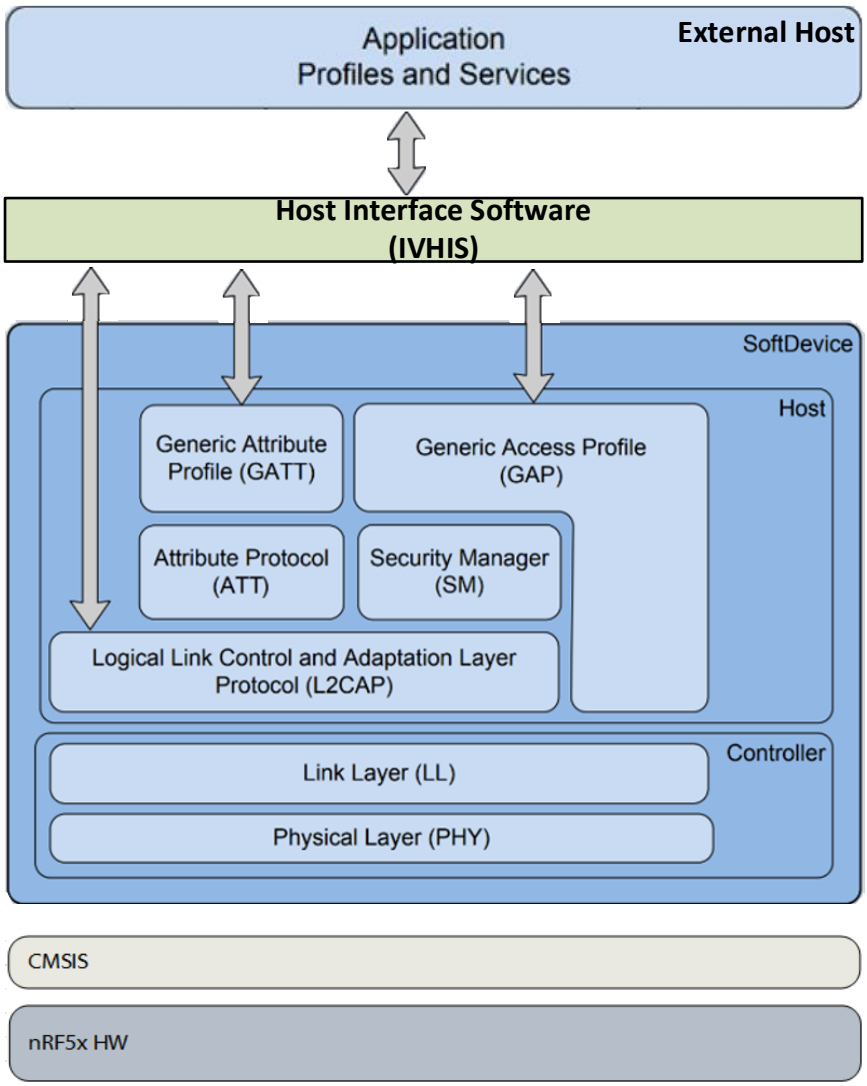

Figure 4: RENO Software Block Diagram

8.4 Software development

Please refer to the RENO EVK User guide and RENO App notes for information on how to get started with existing examples testing or developing new applications in standalone and embedded modes.

9 Package Description

9.1 Mechanical characteristics

Parameter	Value (L X W X H)	Units
Module Dimensions	10 X 15 X 1.6	mm
Tolerance	+/- 0.15	mm

Table 11: Mechanical characteristics

9.2 Landing pattern

Please see 'NILE series Module Integration guide (MIG)'

9.3 Physical Dimensions and pad Location

Please see 'NILE series Module Integration Guide (MIG)'

10 Regulatory qualifications and approvals

NILE series modules are certified for FCC, IC and CE/ETSI. Host product manufacturer can leverage the certification of the modular transmitter to reduce their end product certification requirements and complexity as long as they are responsible to follow the integration guidance from Ivativ mentioned in 'NILE series Regulatory Compliance App Note' for any modifications and types of antennas to use. Not following the guidelines from Ivativ will result in the device to be certified afresh. They should perform a limited set of transmitter module verification testing, to ensure the end product is in compliance with the FCC, IC and CE/ETSI rules. Also host product manufacturers are responsible for all additional equipment authorization and testing for technical requirements not covered by the module grant (e.g., unintentional radiator Part 15 Subpart B requirements, or transmitters used in the host that are not certified modules).

For detailed information on how to integrate NILE series modules for leveraging the module certification, please see 'NILE series Regulatory Compliance App Note'.

This device complies with Part 15 of the FCC Rules. Operation is subject to the following two conditions: (1) this device may not cause harmful interference, and (2) this device must accept any interference received, including interference that may cause undesired operation.

Warning: changes or modifications not expressly approved by the party responsible for compliance could void the user's authority to operate the equipment.

This Module complies with FCC radiation exposure limits set forth for an uncontrolled environment. This equipment should be installed and operated with a minimum distance of 20cm between the radiator and your body. This transmitter must not be co-located or operating in conjunction with any other antenna or transmitter.

List of applicable FCC/RSS rules:
47 CFR Part 15, Subpart C 15.203
47 CFR Part 15, Subpart C 15.205
47 CFR Part 15, Subpart C 15.207
47 CFR Part 15, Subpart C 15.209
47 CFR Part 15, Subpart C 15.247
47 CFR Part 2.1091
RSS-247

11 Product Shipping, Storage and Handling

11.1 Package Information

The NILE series modules are delivered as hermetically sealed trays and reels. For more information, please refer to 'Ivativ Package Shipping, Storage and Handling Guide'.

11.2 Storage and Baking Instructions

NILE series modules are moisture sensitive devices and are rated at MSL 3. The new packages contain desiccate to absorb moisture and humidity indicator card to display the moisture level maintained during storage and shipment. If the card recommends baking, bake the parts in accordance with JEDEC standard J-STD-033. Floor life for these modules is 168 hours of factory conditions (≤ 30°C, 60% RH). For more information, please refer to 'Ivativ Package Shipping, Storage and Handling Guide'.

11.3 Mounting process and soldering recommendations

Please see 'NILE series Module Integration Guide'.

12 Product label and ordering information

The figure below illustrates the marking on the modules which indicates Ivativ logo, model number, date code and lot number. Due to small size of the module label certification IDs are shown only in the user manual and not on the label.

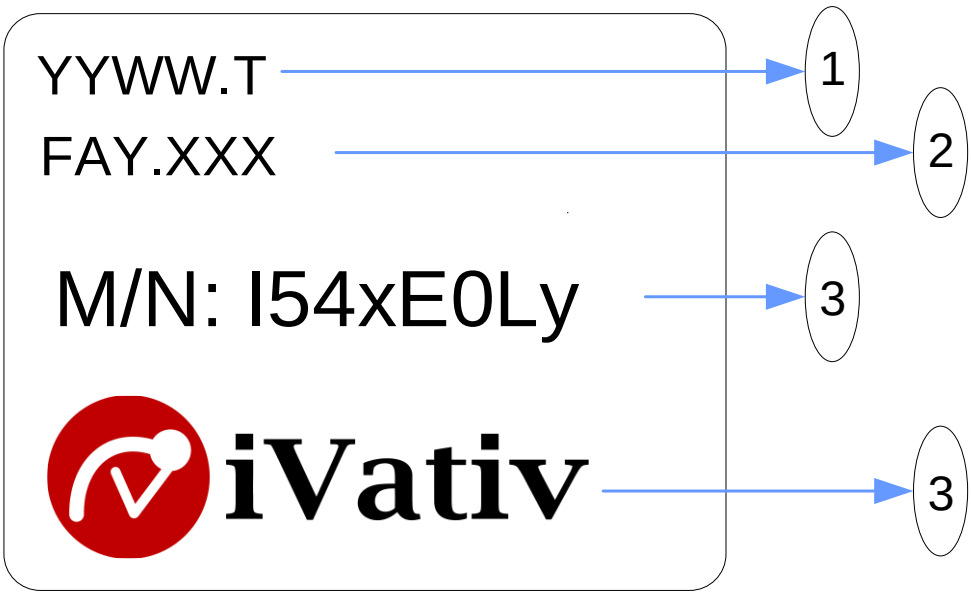

Figure 5: Module Label

The table below describes the markings on the label.

Reference	Description
1	Date Code. YYWW.T: Year/Week/Temp Grade
2	Lot Number. FAY.XXX FAY: Fab, assembly and single digit year of make XXX: Lot number
3	Model number. Where 'x' indicates host interface * 0- PCB antenna(0.5dBi) 1- MHF4 Antenna(Dipole Antenna, 50Ω, 3dBi))
	Where 'y' indicates protocol support 0 - No other 7 – Zigbee 9 - Thread
4	Ivativ Logo. Round logo symbol indicates the pin 1, unless marked specifically

Table 12: Module Label Description

*: If you desire to increase antenna gain and either change antenna type or use same antenna type certified, a Class II permissive change application is required to be filed by us, or you (host manufacturer) can take responsibility through the change in FCC ID (new application) procedure followed by a Class II permissive change application.

12.1 Part Ordering

RENO module

I540E0L0-I2LT	RENO multi-protocol module with PCB Antenna, Tray packing
I540E0L0-I2LR	RENO multi-protocol module with PCB Antenna, Tape and Reel packing
I541E0L0-I3LT	RENO multi-protocol module with MHF4 Antenna connector, Tray packing
I541E0L0-I3LR	RENO multi-protocol module with MHF4 Antenna connector, Tape and Reel packing

Table 13: Part Ordering for RENO module

RENO EVK/DVK

I540E0L0-2L-DVK	RENO DVK kit with PCB Antenna
I541E0L0-3L-DVK	RENO DVK kit with MHF4 Antenna connector

Table 14: Part Ordering for RENO EVK/DVK

12.2 Label and compliance information

Please notice that if the FCC identification number is not visible when the module is installed inside another device, then the outside of the device into which the module is installed must also display a label referring to the enclosed module. This exterior label can use wording such as the following: "Contains FCC ID: 2AYLDI54" any similar wording that expresses the same meaning may be used.

§ 15.19 Labelling requirements shall be complied on end user device.
Labelling rules for special device, please refer to §2.925, § 15.19 (a)(5) and relevant KDB publications. For E-label, please refer to §2.935.

12.3 Information on test modes and additional testing requirements

The OEM integrator is responsible for ensuring that the end-user has no manual instruction to remove or install module.

Note: Control the test sample into engineering mode with the NILE EVK, which could be transmitted continued at the highest, middle & lowest frequency.

12.4 FCC other Parts, Part 15B Compliance Requirements for Host product manufacturer

This modular transmitter is only FCC authorized for the specific rule parts listed on our grant, host product manufacturer is responsible for compliance to any other FCC rules that apply to the host not covered by the modular transmitter grant of certification.

Host manufacturer in any case shall ensure host product which is installed and operating with the module is in compliant with Part 15B requirements.

Please note that For a Class B or Class A digital device or peripheral, the instructions furnished the user manual of the end-user product shall include statement set out in §15.105 Information to the user or such similar statement and place it in a prominent location in the text of host product manual. Original texts as following:

For Class B

Note: This equipment has been tested and found to comply with the limits for a Class B digital device, pursuant to part 15 of the FCC Rules. These limits are designed to provide reasonable protection against harmful interference in a residential installation. This equipment generates, uses and can radiate radio frequency energy and, if not installed and used in accordance with the instructions, may cause harmful interference to radio communications. However, there is no guarantee that interference will not occur in a particular installation. If this equipment does cause harmful interference to radio or television reception, which can be determined by turning the equipment off and on, the user is encouraged to try to correct the interference by one or more of the following measures:

—Reorient or relocate the receiving antenna.

—Increase the separation between the equipment and receiver.

—Connect the equipment into an outlet on a circuit different from that to which the receiver is connected.

—Consult the dealer or an experienced radio/TV technician for help.

For Class A

Note: This equipment has been tested and found to comply with the limits for a Class A digital device, pursuant to part 15 of the FCC Rules. These limits are designed to provide reasonable protection against harmful interference when the equipment is operated in a commercial environment. This equipment generates, uses, and can radiate radio frequency energy and, if not installed and used in accordance with the instruction manual, may cause harmful interference to radio communications. Operation of this equipment in a residential area is likely to cause harmful interference in which case the user will be required to correct the interference at his own expense.

12.5 ISED compliance statement

This device contains licence-exempt transmitter(s)/receiver(s) that comply with Innovation, Science and Economic Development Canada's licence-exempt RSS(s). Operation is subject to the following two conditions:

(1) This device may not cause interference.

(2) This device must accept any interference, including interference that may cause undesired operation of the device.

L'émetteur/récepteur exempt de licence contenu dans le présent appareil est conforme aux CNR d'Innovation, Sciences et Développement économique Canada applicables aux appareils radio exempts de licence. L'exploitation est autorisée aux deux conditions suivantes :

(1) L'appareil ne doit pas produire de brouillage;

(2) L'appareil doit accepter tout brouillage radioélectrique subi, même si le brouillage est susceptible d'en compromettre le fonctionnement.

12.6 ISED Radiation Exposure statement

This equipment complies with IC RSS-102 radiation exposure limits set forth for an uncontrolled environment. This equipment should be installed and operated with minimum distance 20 cm between the radiator and your body.

Cet équipement est conforme aux limites d'exposition aux radiations IC CNR-102 établies pour un environnement non contrôlé. Cet équipement doit être installé et utilisé avec une distance minimale de 20 cm entre le radiateur et votre corps. Cet émetteur ne doit pas être colocalisé ou fonctionner en conjonction avec une autre antenne ou un autre émetteur.

Please notice that if the IC identification number is not visible when the module is installed inside another device, then the outside of the device into which the module is installed must also display a label referring to the enclosed module. This exterior label can use wording such as the following: "Contains IC: XXXX" any similar wording that expresses the same meaning may be used.

L'étiquette d'homologation d'un module d'Innovation, Sciences et Développement économique Canada devra être posée sur le produit hôte à un endroit bien en vue, en tout temps. En l'absence d'étiquette, le produit hôte doit porter une étiquette sur laquelle figure le numéro d'homologation du module d'Innovation, Sciences et Développement économique Canada, précédé du mot « contient », ou d'une formulation similaire allant dans le même sens et qui va comme suit :
Contient IC : XXXX est le numéro d'homologation du module

This radio transmitter [IC: XXXX] has been approved by Innovation, Science and Economic Development Canada to operate with the antenna types listed below, with the maximum permissible gain indicated. Antenna types not included in this list that have a gain greater than the maximum gain indicated for any type listed are strictly prohibited for use with this device.

Contact Information

Please contact www.ivativ.com