BALI series

Host based Wi-Fi (802.11a/b/g/n/ac) + BT5.0 Modules

I950HCR0

BALI SDIO Datasheet

Version 1.0

For additional Information, please contact info@ivativ.com

Confidential – Ivativ, Inc

Table of Contents

1 Overview 5
2 Features 7
2.1 WLAN Features 7
2.2 Bluetooth Features 7
3 Module Block Diagram 9
4 Pin Definition 10
4.1 Pin Diagram 10
4.2 Pin Table 11
5 Electrical Specification 14
5.1 Absolute maximum ratings 14
5.2 Recommended Operating Conditions 14
5.3 Digital Logic Characteristics 15
5.4 Performance specifications 15
5.4.1 WLAN RF Characteristics 15
5.4.2 BT RF Characteristics 20
6 Software 25
6.1 Software Architecture 25
6.2 WLAN 25
6.3 Bluetooth 25
7 Package Description 26
7.1 Mechanical characteristics 26
7.2 Physical Dimensions, pad Location and Landing Pattern 26
8 Regulatory Qualifications and Approvals 26
8.1 FCC Compliance 26
8.1.1 FCC Compliance Statement 26
8.1.2 RF Exposure compliance statement 27
8.1.3 Labelling Instruction for Host Product Integrator 27
8.1.4 Installation Notice to Host Product Manufacturer 27
8.1.5 Antenna Change Notice to Host manufacturer 27
8.1.6 FCC other Parts, Part 15B Compliance Requirements for Host product manufacturer 28
8.2 IC 29
8.2.1 ISED compliance statement 29

8.2.2 ISED Radiation Exposure statement 30
8.2.3 End Product Labeling instruction 30
8.3 CE 30
8.4 TELEC 31
8.5 Pre-Approved antennas 31
9 Product Shipping, Storage and Handling 32
9.1 Packaging Information 32
9.2 Storage and Baking Instructions 32
9.3 Mounting process and soldering recommendations 32
10 Product label and ordering information 33
10.1 Part ordering 34
Contact Information 34

Table of Figures

Figure 1: BALI block diagram 9
Figure 2: BALI SDIO Module Pin Diagram 10
Figure 3: BALI SDIO Software Architecture 25
Figure 4: Module Label 33

Table of Tables

Table 1: BALI SDIO Module specifications 6
Table 2: BALI SDIO Module Pin Table 13
Table 3: Absolute maximum ratings 14
Table 4: Recommended operating conditions 15
Table 5: General DC electrical characteristics (for VDDIO = 3.3V I/O operation) 15
Table 6: WLAN RF characteristics per chain operation 16
Table 7: Transmit power at 2.4 GHz 17
Table 8: Transmit power at 5 GHz 18
Table 9: Receive minimum input level sensitivity at chip input at 2.4 GHz for configuration at 25°C 18
Table 10: Receive minimum input level sensitivity at chip input at 5 GHz at 25°C 19
Table 11: Maximum input level sensitivity at 25°C 19
Table 12: BT basic rate transmitter performance at 25°C 21
Table 13: BT EDR rate transmitter performance at 25°C 22
Table 14: BT low-energy mode of transmitter performance 23
Table 15: Basic rate receiver performance 23
Table 16: Enhanced data rate receiver performance 24
Table 17: Low-energy mode receiver performance 25
Table 18: Mechanical characteristics 26
Table 19: Approved Antennas 31
Table 20: Module label description 33
Table 21: Part Ordering for BALI 34
Table 22: Part Ordering for BALI EVK/DVK 34

1 Overview

BALI SDIO is a high-performance multi-protocol certified wireless module supporting dual-band 1-stream (1T1R) Wi-Fi 802.11 a/b/g/n/ac and dual mode Bluetooth 5.0. These modules come with integrated MAC, baseband, crystal, OTP memory and RF front-end components supporting a single antenna for dual-band Wi-Fi and Bluetooth. This module supports antenna diversity for best performance. It supports Bluetooth and Wi-Fi coexistence for simultaneous high performance multi-protocol operation. It enables low-power designs by utilizing multiple advanced power-saving techniques including wake on wireless and many host off-loading features. This module is based on Qualcomm QCA9377 SoC and connects to host processor with SDIO 3.0 (Wi-Fi) and UART (BT) host interfaces.

They are offered in custom LGA package with RF pin. These modules are offered in Industrial and commercial temperature grades and are certified for FCC, IC, ETSI/CE and TELEC. Approvals for other countries may be possible upon request.

Module specifications

WLAN Technology	802.11 a/b/g/n, 1-stream MU-MIMO 802.11ac
BT Technology	Bluetooth v5.0 + HS
Frequency band	2.4GHz, 5GHz
On air data rates	**2.4GHz** 11b - 1, 2, 5.5, 11Mbps 11g - 6, 9, 12, 18, 24, 36, 48, 54Mbps 11n - MCS0 to MCS7 or up-to 150Mbps **5GHz** 11a - 6,9,12,18,24,36,48, 54Mbps 11n/ac - MCS0 to MCS9 or Up to 433Mbps
Security features	WPA/WPA2 -PSK TKIP/AES, WPS 2.0, Enterprise Security (EAP) STA only.
Modulation schemes	**2.4GHz** 11b - BPSK, QPSK, CCK 11g - BPSK, QPSK, 16QAM, 64 QAM 11n -PSK, QPSK, 16QAM, 64 QAM **5GHz** 11a/n/ac-BPSK, QPSK, 16QAM, 64 QAM
Antenna options	Antenna pin
SDIO host interface	Wi-Fi - SDIO 3.0 Bluetooth – UART and PCM
Max throughput	310Mbps

Maximum Transmit Power (dBm)	**Protocol**	**Band**	**FCC**	**ETSI**
	Wi-Fi	2412MHz-2472MHz/2422MHz-2462MHz	19.14	16.95
	Wi-Fi	5150MHz-5725MHz	15.72	19.2
	Wi-Fi	5745MHz-5825MHz	16.06	13.66
	BT	2402MHz-2480MHz	6.87	8.14
	BLE	2402MHz-2480MHz	6.68	7.09
Receive Sensitivity	Wi-Fi	-97.5dBm		
	BT	-96dBm		
	BLE	-99dBm		
WLAN bandwidths	20/40/80MHz			

Table 1: BALI SDIO Module specifications

2 Features

2.1 WLAN Features

- Wi-Fi - Low power dual-band (2.4 and 5 GHz), 1-stream MU-MIMO 802.11ac
- WLAN TCP Throughput at 80 MHz 11ac: **310Mbps**
- WLAN Security
  - WPA/WPA2 Personal
  - Enterprise security (STA only)
  - WPS 2.0
- WLAN Encryption
  - WEP
  - TKIP
  - AES
- Operating modes
  - STA
  - SoftAP
  - P2P Group Owner and Client
  - STA + SoftAP
  - STA + P2P Group Owner
  - STA + P2P Client
  - Support for multiple BSSID (Two soft APs and a STA can operate concurrently)
- Power Save
  - Module power saving features
    - Idle mode power save / Deep sleep
    - Legacy Protocol Power save / Beacon Mode Power Save
    - WMM-PS / UAPSD
    - Tx power-saving feature (Green TX)
  - Host power saving features
    - WoW - Wake on Wireless (WLAN)
    - Offloading features: ARP, GTK, Neighbor solicitation (NS) offloading to the FW
- WMM and WMM-PS
- DFS Client
- Transmit beam forming
- 11r/FT roaming and Legacy fast roaming

2.2 Bluetooth Features

- Bluetooth 5.0
  - BR/EDR + HS
  - Bluetooth Low Energy
- WLAN Bluetooth coexistence

- Supports Bluetooth for Class-1 and Class-2 transmissions without requiring an external power amplifier
- BLE secure connections
- Bluetooth stack
    - Bluez
- BT stack core profiles
    - SDP, L2CAP, GAP - Bluetooth 5.0
- BT stack profiles
    - Serial Port Profile - SPP over BR/EDR
    - Audio / A2DP
        - Source 1.2
        - Sink 1.2
    - Voice / HFP (Hands Free Profile)
        - Audio Gateway (1.7)
        - Hands Free (1.6)
        - CVSD audio coding over SCO
        - mSBC audio coding over eSCO
    - HID
        - HID over BR/EDR
        - HID over GATT

3 Module Block Diagram

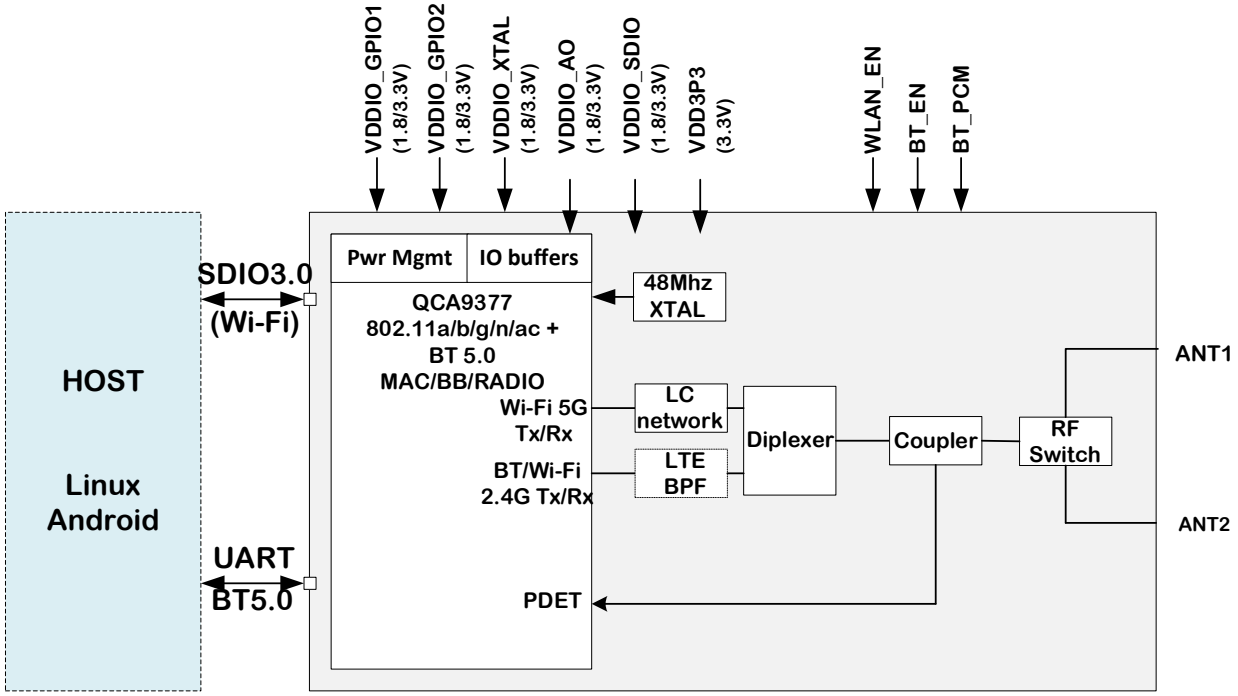

Figure 1: BALI block diagram

4 Pin Definition

4.1 Pin Diagram

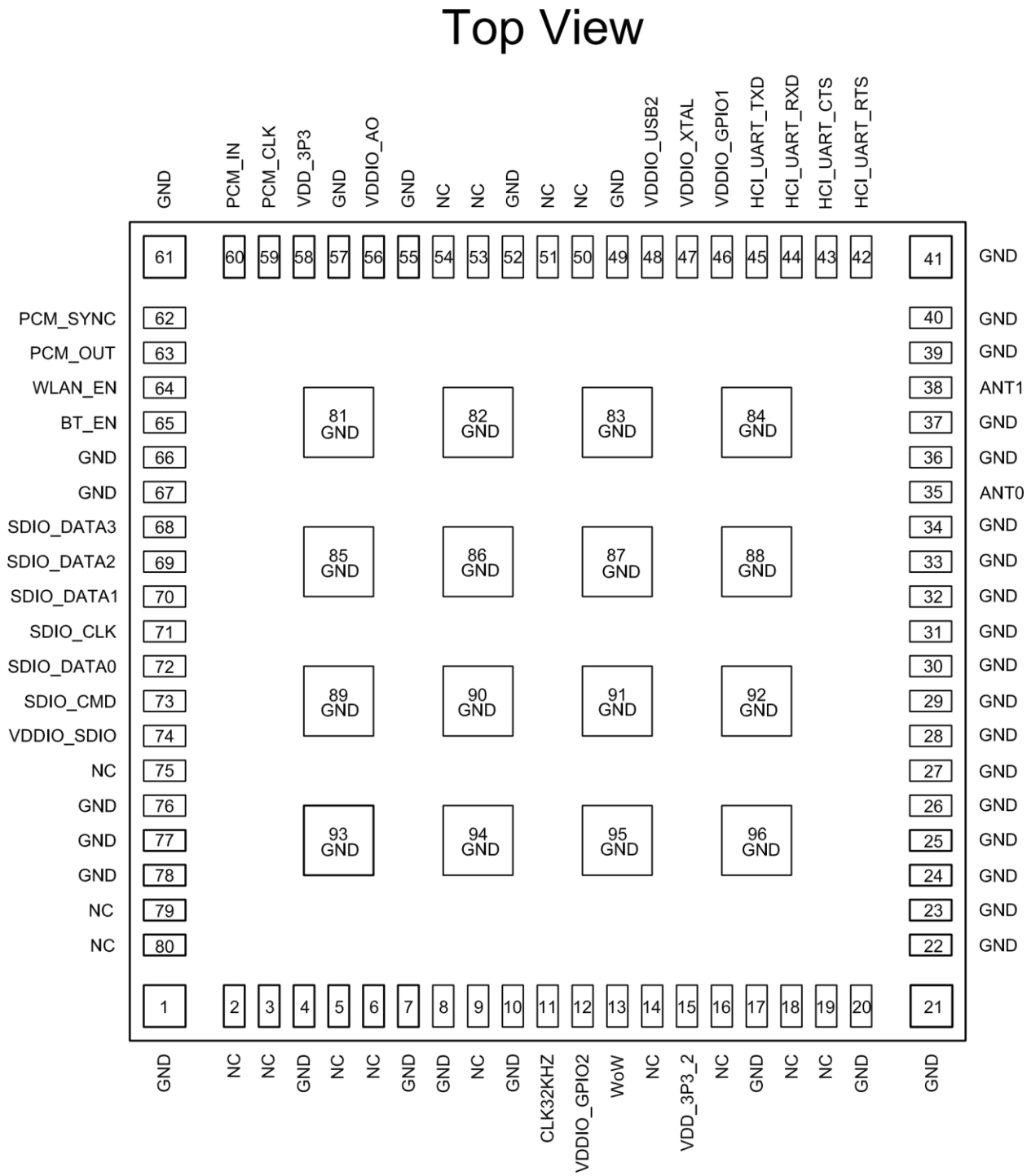

Figure 2: BALI SDIO Module Pin Diagram

4.2 Pin Table

Pin Number	BALI_SW Pin Name SDIO	Pin Type	Voltage Ref	Description
1	GND	Ground	GND	Ground
2	NC	NC	NC	No connect
3	NC	NC	NC	No connect
4	GND	Ground	GND	Ground
5	NC	NC	NC	No connect
6	NC	NC	NC	No connect
7	GND	Ground	GND	Ground
8	GND	Ground	GND	Ground
9	NC	NC	NC	No connect
10	GND	Ground	GND	Ground
11	CLK32KHZ	I	VDDIO_GPIO2	Low frequency clock. 32KHz
12	VDDIO_GPIO2	Power	1.8V/3.3V	I/O power
13	WoW	O	VDDIO_GPIO2	Wake On Wireless (WoW). GPIO35
14	NC	NC	NC	No connect
15	VDD_3P3_2	Power	3.3V	Power
16	NC	NC	NC	No connect
17	GND	Ground	GND	Ground
18	NC	NC	NC	No connect
19	NC	NC	NC	No connect
20	GND	Ground	GND	Ground
21	GND	Ground	GND	Ground
22	GND	Ground	GND	Ground
23	GND	Ground	GND	Ground
24	GND	Ground	GND	Ground
25	GND	Ground	GND	Ground
26	GND	Ground	GND	Ground
27	GND	Ground	GND	Ground
28	GND	Ground	GND	Ground
29	GND	Ground	GND	Ground
30	GND	Ground	GND	Ground
31	GND	Ground	GND	Ground
32	GND	Ground	GND	Ground

33	GND	Ground	GND	Ground
34	GND	Ground	GND	Ground
35	ANT0	AI/AO	RF	Antenna Pin 0
36	GND	Ground	GND	Ground
37	GND	Ground	GND	Ground
38	ANT1	AI/AO	RF	Antenna Pin 1
39	GND	Ground	GND	Ground
40	GND	Ground	GND	Ground
41	GND	Ground	GND	Ground
42	HCI_UART_RTS	O	VDDIO_GPIO1	BT HCI interface: HCI_UART_RTS
43	HCI_UART_CTS	I	VDDIO_GPIO1	BT HCI interface: HCI_UART_CTS
44	HCI_UART_RXD	I	VDDIO_GPIO1	BT HCI interface: HCI_UART_RXD
45	HCI_UART_TXD	O	VDDIO_GPIO1	BT HCI interface: HCI_UART_TXD
46	VDDIO_GPIO1	Power	1.8V/3.3V	I/O power for GPIO1 domain
47	VDDIO_XTAL	Power	1.8V/3.3V	I/O power for crystal
48	VDDIO_USB2	Power	3.3V	I/O power for USB2 domain
49	GND	Ground	GND	Ground
50	NC	NC	NC	No connect
51	NC	NC	NC	No connect
52	GND	Ground	GND	Ground
53	NC	NC	NC	No connect
54	NC	NC	NC	No connect
55	GND	Ground	GND	Ground
56	VDDIO_AO	Power	1.8V/3.3V	I/O power for Always On logic
57	GND	Ground	GND	Ground
58	VDD_3P3	Power	3.3V	Power
59	PCM_CLK	I/O	VDDIO_GPIO1	BT PCM Clock
60	PCM_IN	I	VDDIO_GPIO1	BT PCM IN
61	GND	Ground	GND	Ground
62	PCM_SYNC	I/O	VDDIO_GPIO1	BT PCM SYNC
63	PCM_OUT	O	VDDIO_GPIO1	BT PCM OUT
64	WLAN_EN	I	VDDIO_AO	WLAN enable. Active high
65	BT_EN	I	VDDIO_AO	Bluetooth enable. Active high
66	GND	Ground	GND	Ground
67	GND	Ground	GND	Ground
68	SDIO_DATA3	I/O	VDDIO_SDIO	SDIO data 3
69	SDIO_DATA2	I/O	VDDIO_SDIO	SDIO data 2
70	SDIO_DATA1	I/O	VDDIO_SDIO	SDIO data 1

71	SDIO_CLK	I	VDDIO_SDIO	SDIO clock
72	SDIO_DATA0	I/O	VDDIO_SDIO	SDIO data 0
73	SDIO_CMD	I	VDDIO_SDIO	SDIO command
74	VDDIO_SDIO	Power	1.8V/3.3V	I/O power for SDIO domain
75	NC	NC	NC	No connect
76	GND	Ground	GND	Ground
77	GND	Ground	GND	Ground
78	GND	Ground	GND	Ground
79	NC	NC	NC	No connect
80	NC	NC	NC	No connect
81	GND	Ground	GND	Ground
82	GND	Ground	GND	Ground
83	GND	Ground	GND	Ground
84	GND	Ground	GND	Ground
85	GND	Ground	GND	Ground
86	GND	Ground	GND	Ground
87	GND	Ground	GND	Ground
88	GND	Ground	GND	Ground
89	GND	Ground	GND	Ground
90	GND	Ground	GND	Ground
91	GND	Ground	GND	Ground
92	GND	Ground	GND	Ground
93	GND	Ground	GND	Ground
94	GND	Ground	GND	Ground
95	GND	Ground	GND	Ground
96	GND	Ground	GND	Ground

Table 2: BALI SDIO Module Pin Table

5 Electrical Specification

5.1 Absolute maximum ratings

Below table summarizes the absolute maximum ratings and Table 3 lists the recommended operating conditions for the BALI. Beyond the range of Absolute maximum ratings/Recommended operating conditions may cause permanent damage.

Functional operation under these conditions only recommended.

NOTE: Operating condition ranges define those limits within which the functionality of the device is guaranteed. Where application information is given, it is advisory only and does not form part of the specification.

Symbol	Parameter	Min	Max	Unit
VDDIO_SDCON	Voltage supply	-0.3	4.0	V
VDDIO_GPIO2	Voltage supply	-0.3	4.0	V
VDDIO_GPIO1	Voltage supply	-0.3	4.0	V
VDDIO_AO	Voltage supply	-0.3	4.0	V
VDDIO_SDIO	Voltage supply	-0.3	4.0	V
VDDIO_XTAL	Voltage supply	-0.3	4.0	V
VDDIO_USB2	Voltage supply	-0.3	4.0	V
VDD3P3	3.3 V supply	-0.3	4.0	V
RF_{IN}	Maximum RF input (reference to 50 Ω input)		+10	dBm
T_{STORE}	Storage temperature	-45	-45 to 135	°C
ESD	Electrostatic discharge tolerance	2000		V
3.3 V I/O VIH MAX	Maximum digital I/O input voltage for 3.3 V I/O supply		VDD + 0.3	V
1.8 V I/O VIH MAX	Maximum digital I/O input voltage for 1.8 V I/O supply		VDD + 0.2	V
VIH MIN	Minimum digital I/O input voltage for 1.8 V or 3.3 V I/O supply	-0.3		V

Table 3: Absolute maximum ratings

5.2 Recommended Operating Conditions

Symbol	Parameter	Min	Typ	Max	Unit
VDD3P3	3.3 V supply	3.135	3.3	3.465	V
VDDIO_SDCON	Voltage supply	1.71	1.8 or 3.3	3.46	V
VDDIO_GPIO2	Voltage supply	1.71	1.8 or 3.3	3.46	V
VDDIO_GPIO1	Voltage supply	1.71	1.8 or 3.3	3.46	V
VDDIO_AO	Voltage supply	1.71	1.8 or 3.3	3.46	V

VDDIO_SDIO	Voltage supply	1.71	1.8 or 3.3	3.46	V
VDDIO_USB2	Voltage supply	1.71	3.3	3.46	V
VDDIO_XTAL	Voltage supply	1.71	1.8 or 3.3	3.46	V
T_{OP}	Operating Temperature	-40	–	85	°C
T_{CASE}	Case temperature	0	–	115	°C
PsiJT	Junction to the top center of the package thermal resistance	–	–	0.5	°C/W

Table 4: Recommended operating conditions

5.3 Digital Logic Characteristics

Symbol	Parameter	Comments	Min	Typ	Max	Unit
VIH	High-level input voltage		0.7 x VDDIO	-	VDDIO + 0.3	V
VIL	Low-level input voltage		-0.3	-	0.3 x VDDIO	V
VSHYS	Schmitt hysteresis		–	1.8 V IO: 375 3.3 V IO: 645	–	mV
RPULL	Input pull resistor	Up or down	–	1.8 V IO: 120 3.3 V IO: 70	–	kΩ
VOH	High-level output voltage		0.9 x VDDIO	–	VDDIO	V
VOL	Low-level output voltage		0	–	0.1 x VDDIO	V

Table 5: General DC electrical characteristics (for VDDIO = 3.3V I/O operation)

5.4 Performance specifications

5.4.1 WLAN RF Characteristics

Symbol	Parameter	Conditions	Min	Typ	Max	Unit
Synthesizer composite characteristics for 2.4 GHz						
F_C	Center channel frequency	Center frequency at 5 MHz spacing	2.412	–	2.472	GHz
F_{REF}	Reference oscillator frequency	±20 ppm	–	48	–	MHz
$TS_{POWERUP}$	Time for power up (from sleep)		–	0.2	–	ms
Synthesizer composite characteristics for 5 GHz						
F_C	Center channel frequency	Center frequency at 5 MHz spacing	5.150		5.825	GHz

F_{REF}	Reference oscillator frequency	±20 ppm	–	48	–	MHz
$TS_{POWERUP}$	Time for power up (from sleep)		–	0.2	–	ms
Transmit output power accuracy						
A_{PC}	Accuracy of transmit power control at 2.4 GHz at room temperature		–	±1.9	–	dB
A_{PC}	Accuracy of transmit power control at 5 GHz at room temperature		–	±2.4	–	dB

Table 6: WLAN RF characteristics per chain operation

Note: All A_{PC} numbers assume a test conducted with a 50 Ω load.

5.4.1.1 Transmit Power at 2.4 GHz

Note: All typical values may vary ±1.5 dB

Standard	Modulation	Data rates	2.4 GHz: Transmit power with IEEE 802.11 EVM and spectral mask compliance at chip output at 25°C			
		Index	802.11b/g	802.11n/ac 20 MHz	802.11n/ac 40 MHz	Unit
			Typ	Typ	Typ	
802.11b	BPSK	1 Mbps	16.0	–	–	dBm
	QPSK	2 Mbps	16.0	–	–	dBm
	CCK	5.5 Mbps	16.0	–	–	dBm
	CCK	11 Mbps	16.0	–	–	dBm
802.11g	BPSK	6 Mbps	18.0	–	–	dBm
	BPSK	9 Mbps	18.0	–	–	dBm
	QPSK	12 Mbps	18.0	–	–	dBm
	QPSK	18 Mbps	18.0	–	–	dBm
	16 QAM	24 Mbps	18.0	–	–	dBm
	16 QAM	36 Mbps	18.0	–	–	dBm
	64 QAM	48 Mbps	18.0	–	–	dBm
	64 QAM	54 Mbps	18.0	–	-	dBm

802.11n/ac	BPSK	MCS0	–	18.0	16.0	dBm
	QPSK	MCS1	–	18.0	16.0	dBm
	QPSK	MCS2	–	18.0	16.0	dBm
	16 QAM	MCS3	–	18.0	16.0	dBm
	16 QAM	MCS4	–	18.0	16.0	dBm
	64 QAM	MCS5	–	18.0	16.0	dBm
	64 QAM	MCS6	–	18.0	16.0	dBm
	64 QAM	MCS7	–	18.0	16.0	dBm
802.11ac (optional)	256 QAM	MCS8	–	15.0	16.0	dBm
	256 QAM	MCS9	–	15.0	16.0	dBm

Table 7: Transmit power at 2.4 GHz

5.4.1.2 Transmit Power at 5 GHz

Note: All typical values may vary ±1.5 dB

Standard	Modulation	Data rates	5 GHz: Transmit power with IEEE 802.11 EVM and spectral mask compliance at chip output at 25°C				
		Index	802.11a	802.11n/ac 20 MHz	802.11n/ac 40 MHz	802.11ac 80 MHz	Unit
			Typ	Typ	Typ	Typ	
802.11a	BPSK	6 Mbps	14.0	–	–	–	dBm
	BPSK	9 Mbps	14.0	–	–	–	dBm
	QPSK	12 Mbps	14.0	–	–	–	dBm
	QPSK	18 Mbps	14.0	–	–	–	dBm
	16 QAM	24 Mbps	14.0	–	–	–	dBm
	16 QAM	36 Mbps	14.0	–	–	–	dBm
	64 QAM	48 Mbps	14.0	–	–	–	dBm
	64 QAM	54 Mbps	14.0	–	–	–	dBm
802.11n/ac	BPSK	MCS0	–	14.0	12.0	-	dBm
	QPSK	MCS1	–	14.0	12.0	-	dBm
	QPSK	MCS2	–	14.0	12.0	-	dBm

	16 QAM	MCS3	–	14.0	12.0	-	dBm
	16 QAM	MCS4	–	14.0	12.0	-	dBm
	64 QAM	MCS5	–	14.0	12.0	-	dBm
	64 QAM	MCS6	–	14.0	12.0	-	dBm
	64 QAM	MCS7	–	14.0	12.0	-	dBm
802.11ac	256 QAM	MCS8	–	14.0	14.0	14.0	dBm
	256 QAM	MCS9	–	14.0	14.0	14.0	dBm

Table 8: Transmit power at 5 GHz

5.4.1.3 Receive minimum input level sensitivity at chip input at 2.4 GHz for configuration at 25°C

Note: All typical values may vary ±1.0 dB

Standard	**Modulation**	**Data rates**	**2.4 GHz: IEEE receive minimum input level sensitivity at chip input with 10% packet error rate (100 bytes at 11b and 1000 bytes at OFDM) at 25°C, LDPC enabled**			
		Index	**802.11b/g**	**802.11n/ac 20 MHz**	**802.11n/ac 40 MHz**	**Unit**
			Typ	**Typ**	**Typ**	
802.11b	BPSK	1 Mbps	-99.5	–	–	dBm
	CCK	11 Mbps	-92.0	–	–	dBm
802.11g	BPSK	6 Mbps	-94.0	–	–	dBm
	64 QAM	54 Mbps	-78.0	–	–	dBm
802.11n/ac	BPSK	1SS MCS0	–	-94.0	-91.0	dBm
	64 QAM	1SS MCS7	–	-77.0	-72.0	dBm
802.11ac (optional)	256 QAM	1SS MCS8	–	-73.0	-70.0	dBm
	256 QAM	1SS MCS9	–	–	-69.0	dBm

Table 9: Receive minimum input level sensitivity at chip input at 2.4 GHz for configuration at 25°C

5.4.1.4 Receive minimum input level sensitivity at chip input at 5 GHz at 25°C

Note: All typical values may vary ±1.0 dB

Standard	Mod	Data rates	5 GHz: IEEE receive minimum input level sensitivity at chip input with 10% packet error rate (1000 bytes) at 25°C, LDPC enabled				
		Index	802.11a	802.11n/ac 20 MHz	802.11n/ac 40 MHz	802.11n/ac 80 MHz	Unit
			Typ	Typ	Typ	Typ	
802.11a	BPSK	6 Mbps	-94.0	–	–	–	dBm
	64 QAM	54Mbps	-77.0	–	–	–	dBm
802.11n/ac	BPSK	1SS MCS0	–	-94.0	-91.0	-88.0	dBm
	64 QAM	1SS MCS7	–	-76.5	-74.0	-70.0	dBm
802.11ac	256 QAM	1SS MCS8	–	–	-72.5	-68.0	dBm
(optional)	256 QAM	1SS MCS9	–	–	–	-64.0	dBm

Table 10: Receive minimum input level sensitivity at chip input at 5 GHz at 25°C

5.4.1.5 Maximum input level sensitivity at 25°Cs

Maximum input level sensitivity at chip input					
Standard	Band	Modulation	IEEE max input level	Max input level at chip input	Unit
802.11b	2.4 GHz	DBPSK	-4	-5.5	dBm
802.11b	2.4 GHz	CCK	-10	-5	dBm
802.11g	2.4 GHz	OFDM	-20	-10	dBm
802.11a	5 GHz	OFDM	-30	-10	dBm
802.11n	2.4 GHz	OFDM	-20	-10	dBm
	5 GHz	OFDM	-30	-10	dBm
802.11ac	2.4 GHz	OFDM	-30	-10	dBm
	5 GHz	OFDM	-30	-10	dBm

Table 11: Maximum input level sensitivity at 25°C

5.4.2 BT RF Characteristics

NOTE: The performance may vary slightly depending on the environment.

5.4.2.1 BT Tx

BT RF transmitter specifications are listed according to three operating modes: the basic rate, the enhanced data rate, and low-energy mode. All typical performance specifications, unless noted otherwise, are based on operation at room temperature (+25°C) using default parameter settings and nominal supply voltages.

Parameter	Comments	BT specification	Min	Typ	Max	Units
RF frequency range		2.4 ≤ f ≤ 2.4835	2402	–	2480	MHz
RF output power (GFSK)	Maximum power setting		-	5.7	-	dBm
Transmit power accuracy			–	±2	–	dB
Transmit power control range		≥ 16	30	40	–	dB
Transmit power control step size	Each control step of power change	2 ≤ step size ≤ 8	2	–	8	dB
20 dB bandwidth	GFSK only	≤ 1000	–	923	1000	kHz
Adjacent channel power (±2 channels)	F = F0 ± 2 MHz	≤ -20	–	-48	-	dBm
Adjacent channel power (±3 channels)	F = F0 ± 3 MHz	≤ -40	–	-52	-	dBm
Frequency deviations	Δf1AVG maximum modulation	140 ≤ Δf1AVG ≤ 175	-	152	-	kHz
	Δf2AVG maximum modulation	≥ 115	-	163	–	kHz
	Δf2AVG/Δf1AVG	≥ 0.80	-	1.07	–	–
	Packets exceeding 115 kHz (Δf2MAX)		99.9	–	–	%
Frequency tolerance		≤ ±75	-75	–	+75	kHz
Carrier frequency drift	Maximum drift rate within 50 µs	≤ ±20	-20	–	+20	kHz/50 µs
	Maximum length 1-slot packet	≤ ±25	-25	–	+25	kHz

	Maximum length 3-slot packet	≤ ±40	-40	–	+40	kHz
	Maximum length 5-slot packet	≤ ±40	-40	–	+40	kHz

Table 12: BT basic rate transmitter performance at 25°C

5.4.2.2 BT EDR rate transmitter performance at 25°C

Parameter	Comments	BT specification	Min	Typ	Max	Units
RF frequency range		2.4 ≤ f ≤ 2.4835	2402	–	2480	MHz
RF output power	π/4DQPSK			6.8		dBm
	8DPSK			6.8		dBm
Transmit power accuracy			–	± 2	–	dB
Transmit power control range				40		dB
EDR transmit power control step size	Each control step of power change	2 ≤ step size ≤ 8	2		8	dB
EDR differential phase encoding		≥ 99	–	100	–	%
DEVM for π/4DQPSK	> 99% of measured blocks	≤ 99	99	–	–	%
	RMS for any measured block	≤ 20	–	6	13	%
	Peak	≤ 35	–	8	25	%
DEVM for 8DPSK	> 99% of measured blocks	≤ 99	99	–	–	%
	RMS for any measured block	≤ 13	–	6	13	%
	Peak	≤ 25	–	8.64	25	%
Maximum carrier frequency stability						
Block error (ωo)	π/4DQPSK of error for RMS DEVM, all blocks	≤ ±10	-10	-0.899	+10	kHz
	8DPSK of error for RMS DEVM, all blocks		-10	-1.5	+10	kHz
Packet error (ωj)	π/4DQPSK of initial error, all packets	≤ ±75	-75	27.75	+75	kHz

	8DPSK of initial error, all packets		-75	28	+75	kHz
Total error (ωj + ωo)	π/4DQPSK of total blocks	≤ ±75	-75	26.851	+75	kHz
	8DPSK of total blocks		-75	26.5	+75	kHz
Adjacent channel power						
Adjacent channel power (±1 channels)	F = F0 ± 1 MHz	≤ -26	–	-36	–	dBm
Adjacent channel power (±2 channels)	F = F0 ± 2 MHz	≤ -20	–	-37	–	dBm
Adjacent channel power (±3 channels)	F ≥ F0 ± 3 MHz	≤ -40	–	-47	–	dBm

Table 13: BT EDR rate transmitter performance at 25°C

5.4.2.3 BT low-energy mode of transmitter performance

Parameter	Comments	BT specification	Min	Typ	Max	Units
RF frequency range		2.4 ≤ f ≤ 2.4835	2402	–	2480	MHz
Average RF output power	Maximum output power setting		–	6.6	–	dBm
Transmit power accuracy			–	± 2	–	dB
In-band emissions						
	F = FTX ± 2 MHz		–	–	-20	dBm
	F ≥ FTX ± 3 MHz		–	–	-30	dBm
Modulation characteristics						
Δf1AVG	Recorded over 10 test packets		225	250	275	kHz
Δf2MAX			99.9	–	–	%
Δf2MAX / Δf1AVG			0.8	1.1	–	–
Carrier frequency offset and drift						
fn – fTX, n = 0, 1, 2,…,k	fTX is the nominal TX frequency		-150	–	+150	kHz
|f0 – fn |, n=2, 3, …,k			–	–	50	kHz
|f1 – f0 |			–	–	20	kHz

|fn – fn-5 |, n = 2, 3,…,k			–	–	20	kHz

Table 14: BT low-energy mode of transmitter performance

5.4.2.4 BT Rx

BT RF receiver specifications are listed according to three operating modes: the basic rate the enhanced data rate and low-energy mode. All typical performance specifications, unless noted otherwise, are based on operation at room temperature (+25°C) using default parameter settings and nominal supply voltages.

Parameter	Comments	BT specification	Min	Typ	Max	Units
RF frequency range		2.4 ≤ f ≤ 2.4835	2402	–	2480	MHz
Sensitivity	BER ≤ 0.1%	≤ -70	–	-96	-91	dBm
Maximum usable input	BER ≤ 0.1%	≥ -20	0	10	–	dBm
Maximum level of Intermodulation interference		> -39	-39	-33	–	dBm
Carrier to interference ratios (C/I)3 BER ≤ 0.1%						
Co-channel		11	–	–	11	dB
Adjacent channel	F = FTX ± 1 MHz	0	–	–	0	dB
	F = FTX ± 2 MHz	-30	–	–	-30	dB
	F ≥ FTX ± 3 MHz	-40	–	–	-40	dB
Out of band blocking3,6 (measured without band pass filter)						
BT	30 to 2000 MHz		-10	–	–	dBm
	2000 to 2400 MHz		-27	–	–	dBm
	2500 to 3000 MHz		-27	–	–	dBm
	3000 to 12750 MHz		-10	–	–	dBm

Table 15: Basic rate receiver performance

5.4.2.5 Enhanced data rate receiver performance

Parameter	Comments	BT specification	Min	Typ	Max	Units
RF frequency range		2.4 ≤ f ≤ 2.4835	2402	–	2480	MHz
Sensitivity (BER ≤ 0.1%)	π/4DQPSK	≤ -70	–	-95	-91	dBm
	8DPSK	≤ -70	–	-88	-84	dBm

Maximum usable input (BER ≤ 0.1%)	π/4DQPSK	≥ -20	-15	–	–	dBm
	8DPSK	≥ -20	-15	–	–	dBm
Carrier to interference ratios (C/I)3, BER ≤ 0.1%						
Co-channel	π/4DQPSK	≤ ±13	–	–	13	dB
	8DPSK	≤ ±20	–	–	21	dB
Adjacent channel F = Fc ± 1 MHz	π/4DQPSK	≤ 0	–	–	0	dB
	8DPSK	≤ 5	–	–	5	dB
Adjacent channel F = Fc ± 2 MHz	π/4DQPSK	≤ -30	–	–	-30	dB
	8DPSK	≤ -25	–	–	-25	dB
Adjacent channel F = Fc ± 3 MHz	π/4DQPSK	≤ -40	–	–	-40	dB
	8DPSK	≤ -33	–	–	-33	dB

Table 16: Enhanced data rate receiver performance

5.4.2.6 Low-energy mode receiver performance

Parameter	Comments	BT specification	Min	Typ	Max	Units
RF frequency range		2.4 ≤ f ≤ 2.4835	2402	–	2480	MHz
Sensitivity	BER ≤ 0.1%			-99		dBm
Intermodulation			-50			dBm
Maximum input signal level			0	10		dBm
PER report integrity			50			%
Carrier to interference ratios (C/I)						
Carrier to interference ratios (C/I)	Co-channel				20	dB
	F = FC ± 1 MHz				15	dB
	F = FC ± 2 MHz				-17	dB
	F = FC ± 3 MHz				-27	dB
Out of band blocking	30 to 2000 MHz		-30			dBm
	2003 to 2399 MHz		-35			dBm
	2484 to 2997 MHz		-35			dBm
	3 GHz to 12.75 GHz		-30			dBm

Table 17: Low-energy mode receiver performance

6 Software

6.1 Software Architecture

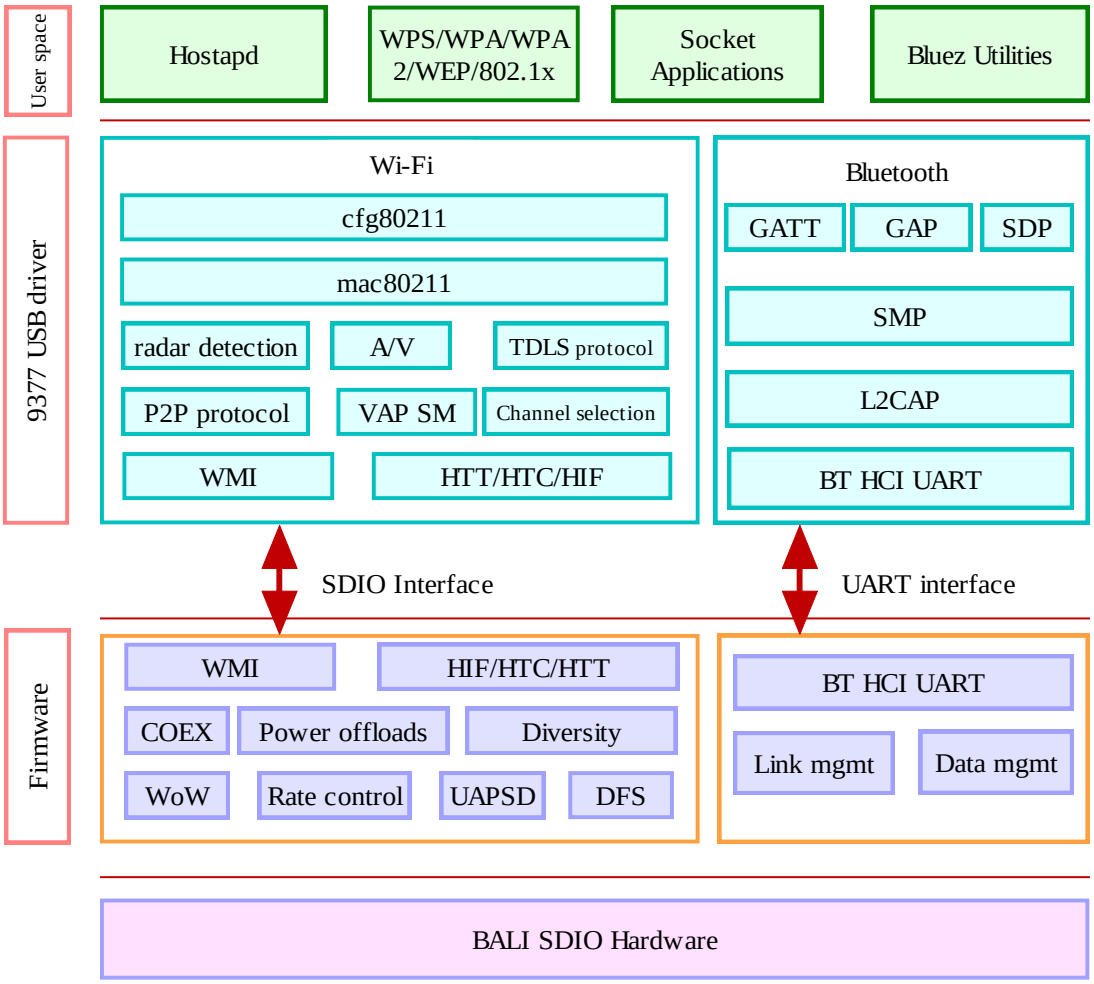

Figure 3: BALI SDIO Software Architecture

6.2 WLAN

Drivers are available for Linux (Kernel Version 4.4.15, 4.9.11 and 4.11), Android Nougat.

- Refer to SDIO DVK User Guide for more details about drivers and testing procedures

6.3 Bluetooth

- Support for Bluez stack
- Available for both for embedded boards and the x86 platforms

Please contact iVativ support for more details about Bluetooth documentation

7 Package Description

7.1 Mechanical characteristics

Parameter	Value (L X W X H)	Units
Module Dimensions	11.75 X 12 X 1.6	mm
Tolerance	+/- 0.15	mm

Table 18: Mechanical characteristics

7.2 Physical Dimensions, pad Location and Landing Pattern

Please see 'BALI series Module Integration Guide (MIG)'

8 Regulatory Qualifications and Approvals

BALI series modules hold full modular approvals and are certified for FCC, IC, CE/ETSI and TELEC for use in USA, Canada, Europe and Japan respectively. End product manufacturers can inherit the module approvals for compliance testing of their device by strictly following grantee's compliance guidelines for module integration and operation and can avoid further testing of module transmitter function.

For detailed information on how to integrate BALI series modules for leveraging the module certification, please see 'BALI series Regulatory Compliance App Note'.

8.1 FCC Compliance

BALI series modules are intended for OEM integrators only. These integrators should make sure that the end product using BALI series module uses only authorized antennas and is compliant to all rules.
End user manual shall include all the required regulatory information given in this manual.

8.1.1 FCC Compliance Statement

This equipment has been tested and found to compliant with part 15 of the FCC Rules. These limits are designed to provide reasonable protection against harmful interference in a residential installation. This equipment generates, uses and can radiate radio frequency energy and, if not installed and used in accordance with the instructions, may cause harmful interference to radio communications. However, there is no guarantee that interference will not occur in a particular installation. If this equipment does cause harmful interference to radio or television reception, which can be determined by turning the equipment off and on, the user is encouraged to try to correct the interference by one or more of the following measures:

- Reorient or relocate the receiving antenna.
- Increase the separation between the equipment and receiver.
- Connect the equipment into an outlet on a circuit different from that to which the receiver is connected.
- Consult the dealer or an experienced radio/TV technician for help.

§15.19 Statement

This device complies with Part 15 of the FCC Rules. Operation is subject to the following two conditions: (1) this device may not cause harmful interference, and (2) this device must accept any interference received, including interference that may cause undesired operation.

§15.21 Information to user:

Warning: changes or modifications not expressly approved by the party responsible for compliance could void the user's authority to operate the equipment.

8.1.2 RF Exposure compliance statement

This Module complies with FCC radiation exposure limits set forth for an uncontrolled environment. This equipment should be installed and operated with a minimum distance of 20cm between the radiator and your body. This transmitter must not be co-located or operating in conjunction with any other antenna or transmitter except in accordance with FCC multi-transmitter guidelines.

8.1.3 Labelling Instruction for Host Product Integrator

Please notice that if the FCC identification number is not visible when the module is installed inside another device, then the outside of the device into which the module is installed must also display a label referring to the enclosed module. This exterior label can use wording such as the following:

"Contains FCC ID: 2AYLDI95" or

"Contains Transmitter Module FCC ID: 2AYLDI95"

§ 15.19 Labelling requirements shall be complied on end user device.

Labelling rules for special device, please refer to *§2.925, § 15.19 (a)(5)* and relevant KDB publications. For E-label, please refer to *§2.935*.

8.1.4 Installation Notice to Host Product Manufacturer

The OEM integrator is responsible for ensuring that the end-user has no manual instruction to remove or install module.

RF exposure compliance instruction

The module is limited to installation in mobile application, a separate approval is required for all other operating configurations, including portable configurations with respect to §*2.1093*, co-location with another transmitter and difference in antenna configurations.

Host product manufacturer shall at least provide information of minimum separation distance to end users in RF exposure compliance statement to end users in their end-product manuals.

8.1.5 Antenna Change Notice to Host manufacturer

Module integrators are recommend using antenna which is certified with this module mentioned in this manual. Module integrators can use their own antenna but must ensure it is of same type and of equal

or less gain as of certified antenna. No retesting of this system configuration is required. Refer to FCC Part 15.20 (c)(4).

If you desire to increase antenna gain and either change antenna type or use same antenna type certified, a Class II permissive change application is required to be filed by us, or you (host manufacturer) can take responsibility through the change in FCC ID (new application) procedure followed by a Class II permissive change application based on new emissions testing. Please perform testing on frequency bands where the antenna gain is highest, worst-case band-edges based on original filing, and only on frequency bands where the antenna gain is highest. See §2.1043. Contact Ivativ representative before adding different antennas(The antenna is not a trace antenna).

8.1.6 FCC other Parts, Part 15B Compliance Requirements for Host product manufacturer

This modular transmitter is only FCC authorized for the specific rule parts listed on our grant, host product manufacturer is responsible for compliance to any other FCC rules that apply to the host not covered by the modular transmitter grant of certification.

Host manufacturer in any case shall ensure host product which is installed and operating with the module is in compliant with Part 15B requirements.

Please note that For a Class B or Class A digital device or peripheral, the instructions furnished in the user manual of the end-user product shall include statement set out in *§15.105 Information to the user* or such similar statement and place it in a prominent location of host product manual. Original texts from FCC Rules are as following you may refer to:

For Class B

Note: This equipment has been tested and found to comply with the limits for a Class B digital device, pursuant to part 15 of the FCC Rules. These limits are designed to provide reasonable protection against harmful interference in a residential installation. This equipment generates, uses and can radiate radio frequency energy and, if not installed and used in accordance with the instructions, may cause harmful interference to radio communications. However, there is no guarantee that interference will not occur in a particular installation. If this equipment does cause harmful interference to radio or television reception, which can be determined by turning the equipment off and on, the user is encouraged to try to correct the interference by one or more of the following measures:
—Reorient or relocate the receiving antenna.
—Increase the separation between the equipment and receiver.
—Connect the equipment into an outlet on a circuit different from that to which the receiver is connected.
—Consult the dealer or an experienced radio/TV technician for help.

For Class A

Note: This equipment has been tested and found to comply with the limits for a Class A digital device, pursuant to part 15 of the FCC Rules. These limits are designed to provide reasonable protection against harmful interference when the equipment is operated in a commercial environment. This equipment generates, uses, and can radiate radio frequency energy and, if not installed and used in accordance with the instruction manual, may cause harmful interference to radio communications. Operation of this equipment in a residential area is likely to cause harmful interference in which case the user will be required to correct the interference at his own expense.

Additionally, investigative spot check measurements are strongly recommended to verify the full system compliance after module integration and operating in intended use case. For more information on end product test guidance please check KDB 996369 D04 Module Integration Guide V02.

8.2 IC

BALI series radio transmitter IC:26840-I95 has been approved by Innovation, Science and Economic Development Canada to operate with the antenna types listed below, with the maximum permissible gain indicated. Antenna types not included in this list that have a gain greater than the maximum gain indicated for any type listed are strictly prohibited for use with this device.

A list of all antenna types

Item #	Part Number	Manufacturer	Description	Gain dBi
1	GW.59.3153	Taoglas	2.4GHz/5.1~5.85GHz RP_SMA male dipole antenna. 50 Ohm impedance	2.4 - 2.5GHz: 2.37dBi 5.15 - 5.85GHz: 2.93dBi

Cet émetteur radio IC:26840-I95 a été approuvé par innovation, sciences et développement économique Canada pour fonctionner avec les types d'antennes énumérés ci - dessous et afficher le gain maximal autorisé. Les types d'antennes qui ne sont pas inclus dans cette liste sont strictement interdits avec cet appareil si leur gain est supérieur au gain maximal de l'un des types énumérés.

Liste de tous les types d'antennes

Item #	Part Number	Manufacturer	Description	Gain dBi
1	GW.59.3153	Taoglas	2.4GHz/5.1~5.85GHz RP_SMA male dipole antenna. 50 Ohm impedance	2.4 - 2.5GHz: 2.37dBi 5.15 - 5.85GHz: 2.93dBi

8.2.1 ISED compliance statement

This device contains license-exempt transmitter(s)/receiver(s) that comply with Innovation, Science and Economic Development Canada’s license-exempt RSS(s). Operation is subject to the following two conditions:
(1) This device may not cause interference.
(2) This device must accept any interference, including interference that may cause undesired operation of the device.

L'émetteur/récepteur exempt de license contenu dans le présent appareil est conforme aux CNR d'Innovation, Sciences et Développement économique Canada applicables aux appareils radio exempts de licence. L'exploitation est autorisée aux deux conditions suivantes :
(1) L'appareil ne doit pas produire de brouillage;
(2) L'appareil doit accepter tout brouillage radioélectrique subi, même si le brouillage est susceptible d'en compromettre le fonctionnement.

The user manual for LE-LAN devices shall contain instructions related to the restrictions mentioned in the above sections, namely that:

i. the device for operation in the band 5150–5250 MHz is only for indoor use to reduce the potential for harmful interference to co-channel mobile satellite systems;

i. le dispositif utilisé dans la bande 5150-5250 MHz est réservé à une utilisation en intérieur afin de réduire le risque de brouillage préjudiciable aux systèmes mobiles par satellite dans le même canal;

8.2.2 ISED Radiation Exposure statement

This equipment complies with IC RSS-102 radiation exposure limits set forth for an uncontrolled environment. This equipment should be installed and operated with minimum distance 20 cm between the radiator and your body.
Cet équipement est conforme aux limites d'exposition aux radiations IC CNR-102 établies pour un environnement non contrôlé. Cet équipement doit être installé et utilisé avec une distance minimale de 20 cm entre le radiateur et votre corps.

8.2.3 End Product Labeling instruction

Please notice that if the IC identification number is not visible when the module is installed inside another device, then the outside of the device into which the module is installed must also display a label referring to the enclosed module. This exterior label can use wording such as the following:

"Contains IC:26840-I95" or any similar wording that expresses the same meaning may be used.

L'étiquette d'homologation d'un module d'Innovation, Sciences et Développement économique Canada devra être posée sur le produit hôte à un endroit bien en vue, en tout temps. En l'absence d'étiquette, le produit hôte doit porter une étiquette sur laquelle figure le numéro d'homologation du module d'Innovation, Sciences et Développement économique Canada, précédé du mot « contient », ou d'une formulation similaire allant dans le même sens et qui va comme suit :

"Contient IC:26840-I95" est le numéro d'homologation du module

8.3 CE

BALI series modules comply with the essential requirements and other relevant provisions of the Radio Equipment Directive (RED) 2014/53/EU. BALI series modules are compliant with directive 2011/65/EU (EU RoHS 2) and its amendment directive 2015/863 (EU RoHS 3). In European market, it is the end product manufacturer who is ultimately responsible for the compliance of their device.

For more information on EU regulatory compliance of BALI series modules, please see BALI series Declaration of Conformity and RoHS Declaration. Test reports are available on request.

8.4 TELEC

BALI Series modules comply with Japanese regulatory requirements of MIC certification Item 19, Article 2, Paragraph 1. Test reports are available on request.

8.5 Pre-Approved antennas

BALI series modules are certified with the following antennas.

Item #	Part Number	Manufacturer	Description	Gain dBi
1	GW.59.3153	Taoglas	2.4GHz/5.1~5.85GHz RP_SMA male dipole antenna. 50 Ohm impedance	2.4 - 2.5GHz: 2.37dBi 5.15 - 5.85GHz: 2.93dBi

Table 19: Approved Antennas

9 Product Shipping, Storage and Handling

9.1 Packaging Information

The BALI series modules are delivered as hermetically sealed trays and reels. For more information, please refer to 'Ivativ Package Shipping, Storage and Handling Guide'.

9.2 Storage and Baking Instructions

BALI modules are moisture sensitive devices and are rated at MSL 3. The new packages contain desiccate to absorb moisture and humidity indicator card to display the moisture level maintained during storage and shipment. If the card recommends baking, bake the parts in accordance with JEDEC standard J-STD-033. Floor life for these modules is 168 hours of factory conditions (≤ 30°C, 60% RH). For more information, please refer to 'Ivativ Package Shipping, Storage and Handling Guide'.

9.3 Mounting process and soldering recommendations

Please see 'BALI series Module Integration Guide'.

10 Product label and ordering information

The label of BALI includes important product information.

Below figure illustrates BALI Product labeling, it includes: The Data code, Lot number, Certifications, Model number and Logo. Table 20 illustrates the complete description about BALI Product labeling.

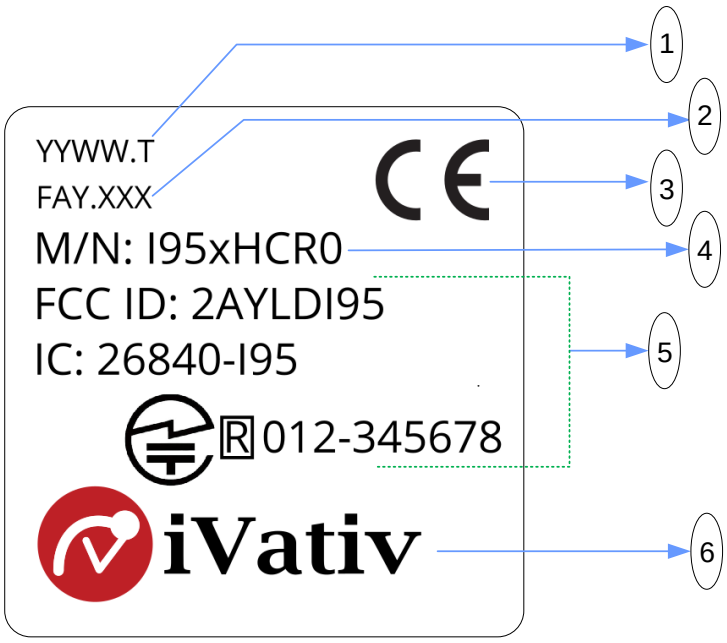

Figure 4: Module Label

The table below describes the markings on the label.

Reference	Description
1	Date Code. YYWW.T: Year/Week/Temp Grade
2	Lot Number. FAY.XXX FAY: Fab, assembly and single digit year of make XXX: Lot number
3	CE Mark
4	Model number. Where 'x' indicates host interface 0- SDIO interface 1- PCIe interface 2- USB interface
5	Certification IDs and GITEKI mark
6	Ivativ Logo. Round logo symbol indicates the pin 1, unless marked specifically

Table 20: Module label description

10.1 Part ordering

BALI

I950HCR0-I0LT	BALI SDIO module with Antenna Pin, Tray packing
I950HCR0-I0LR	BALI SDIO module with Antenna Pin, Tape and Reel packing

Table 21: Part Ordering for BALI

BALI - EVK/DVK

I950HCR0-6L-EVK	BALI SDIO Industrial Temp, Antenna Pin EVK
I950HCR0-6L-µSD-EVK	BALI SDIO Industrial Temp, Antenna Pin, uSD connector EVK
I950HCR0-6L-DVK	BALI SDIO Industrial Temp, Antenna Pin DVK Kit

Table 22: Part Ordering for BALI EVK/DVK

Contact Information

Please contact info@ivativ.com.