# BALI series

**Host based Wi-Fi (802.11a/b/g/n/ac) + BT5.0 Modules**

## I951HCR0

## BALI PCIe Datasheet

**Version 1.0**

**For additional Information, please contact info@ivativ.com**

**Confidential – Ivativ, Inc**

## Table of Contents

1 Overview ..... 5
2 Features ..... 7
2.1 WLAN Features ..... 7
2.2 Bluetooth Features ..... 7
3 Module Block Diagram ..... 9
4 Pin Definition ..... 10
4.1 Pin Diagram ..... 10
4.2 Pin Table ..... 11
5 Electrical Specification ..... 14
5.1 Absolute Maximum Ratings ..... 14
5.2 Recommended Operating Conditions ..... 14
5.3 Digital logic characteristics ..... 15
5.4 Performance Specifications ..... 15
5.4.1 WLAN RF Characteristics ..... 15
5.4.2 BT RF Characteristics ..... 20
6 Software ..... 26
6.1 Software Architecture ..... 26
6.2 WLAN ..... 26
6.3 Bluetooth ..... 26
7 Package Description ..... 27
7.1 Mechanical characteristics ..... 27
7.2 Physical Dimensions, Pad Location and Landing Pattern ..... 27
8 Regulatory Qualifications and Approvals ..... 28
8.1 FCC Compliance ..... 28
8.1.1 FCC Compliance Statement ..... 28
8.1.2 RF Exposure compliance statement ..... 28
8.1.3 Labelling Instruction for Host Product Integrator ..... 29
8.1.4 Installation Notice to Host Product Manufacturer ..... 29
8.1.5 Antenna Change Notice to Host manufacturer ..... 29
8.1.6 FCC other Parts, Part 15B Compliance Requirements for Host product manufacturer ..... 30
8.2 IC ..... 30

8.2.1 ISED compliance statement ..... 31
8.2.2 ISED Radiation Exposure statement ..... 32
8.2.3 End Product Labeling instruction ..... 32
8.3 CE ..... 32
8.4 TELEC ..... 32
8.5 Pre-Approved antennas ..... 32
9 Product Shipping, Storage and Handling ..... 34
9.1 Packaging Information ..... 34
9.2 Storage and Baking Instructions ..... 34
9.3 Mounting process and soldering recommendations ..... 34
10 Product label and ordering information ..... 35
10.1 Part ordering ..... 36
Contact Information ..... 36

## Table of Figures

Figure 1: BALI PCIe Block Diagram with Antenna Pin ..... 9
Figure 2: BALI PCIe Pin Diagram ..... 10
Figure 3: BALI PCIe Software Architecture ..... 26
Figure 4: Module Label ..... 35

## List of Tables

Table 1: BALI PCIe Module specifications ..... 6
Table 2: BALI PCIe Pin Table ..... 13
Table 3: Absolute maximum ratings ..... 14
Table 4: Recommended operating conditions ..... 15
Table 5: General DC electrical characteristics (for VDDIO = 3.3V I/O operation) ..... 15
Table 6: WLAN RF characteristics per chain operation ..... 16
Table 7: Transmit power at 2.4 GHz ..... 17
Table 8: Transmit power at 5 GHz ..... 18
Table 9: Receive minimum input level sensitivity at chip input at 2.4 GHz for configuration at 25°C ..... 18
Table 10: Receive minimum input level sensitivity at chip input at 5 GHz at 25°C ..... 19
Table 11: Maximum input level sensitivity at 25°C ..... 19
Table 12: BT basic rate transmitter performance at 25°C ..... 21
Table 13: BT EDR rate transmitter performance at 25°C ..... 22
Table 14: BT low-energy mode of transmitter performance ..... 23
Table 15: Basic rate receiver performance ..... 23
Table 16: Enhanced data rate receiver performance ..... 24
Table 17: Low-energy mode receiver performance ..... 25
Table 18: Mechanical characteristics ..... 27
Table 19: Approved Antennas ..... 33
Table 20: Module Label Description ..... 35
Table 21: Part Ordering for BALI ..... 36
Table 22: Part ordering for BALI EVK/DVK ..... 36

# 1 Overview

BALI PCIe is a high-performance multi-protocol certified wireless module supporting dual-band 1-stream (1T1R) Wi-Fi 802.11 a/b/g/n/ac and dual mode Bluetooth 5.0. These modules come with integrated MAC, baseband, crystal, OTP memory and RF front-end components supporting a single antenna for dual-band Wi-Fi and Bluetooth. This module supports antenna diversity for best performance. BALI PCIe supports Bluetooth and Wi-Fi coexistence for simultaneous high performance multi-protocol operation. It enables low-power design by utilizing multiple advanced power-saving techniques including many host off-loading features. This module is based on Qualcomm QCA9377 SoC and connects to host processor with PCIe (Wi-Fi) and USB 1.1 (BT) host interfaces.

They are offered in custom LGA package with RF pin. These modules are offered in Industrial and commercial temperature grades and are certified for FCC, IC, ETSI/CE and TELEC. Approvals for other countries may be possible upon request.

### Module specifications

| | |
|---|---|
| WLAN Technology | 802.11 a/b/g/n, 1-stream MU-MIMO 802.11ac |
| BT Technology | Bluetooth v5.0 + HS |
| Frequency band | 2.4GHz, 5GHz |
| On air data rates | **2.4GHz**<br>11b - 1, 2, 5.5, 11Mbps<br>11g - 6, 9, 12, 18, 24, 36, 48, 54Mbps<br>11n - MCS0 to MCS7 or up-to 150Mbps<br>**5GHz**<br>11a - 6,9,12,18,24,36,48, 54Mbps<br>11n/ac - MCS0 to MCS9 or up-to 433Mbps |
| Security features | WPA/WPA2 -PSK TKIP/AES, WPS 2.0, Enterprise Security (EAP) STA only. |
| Modulation schemes | **2.4GHz**<br>11b - BPSK, QPSK, CCK<br>11g - BPSK, QPSK, 16-QAM, 64-QAM<br>11n-PSK, QPSK, 16-QAM, 64-QAM<br>**5GHz**<br>11a/n/ac-BPSK, QPSK, 16-QAM, 64-QAM |
| Antenna options | Antenna pin |
| PCIe host interface | Wi-Fi - PCIe 2.1<br>Bluetooth - USB 1.1 and PCM |
| Max throughput | 330Mbps |

| | | | | |
|---|---|---|---|---|
| Maximum Transmit Power (dBm) | **Protocol** | **Band** | **FCC** | **ETSI** |
| | Wi-Fi | 2412MHz-2472MHz/2422MHz-2462MHz | 19.14 | 16.95 |
| | Wi-Fi | 5150MHz-5725MHz | 15.72 | 19.2 |
| | Wi-Fi | 5745MHz-5825MHz | 16.06 | 13.66 |
| | BT | 2402MHz-2480MHz | 6.87 | 8.14 |
| | BLE | 2402MHz-2480MHz | 6.68 | 7.09 |
| Receive Sensitivity | Wi-Fi | -97.5dBm | | |
| | BT | -96dBm | | |
| | BLE | -99dBm | | |
| WLAN bandwidths | 20/40/80MHz | | | |

*Table 1: BALI PCIe Module specifications*

# 2 Features

## 2.1 WLAN Features

- Low power dual-band (2.4GHz and 5 GHz), 1-stream MU-MIMO 802.11ac
- WLAN TCP Throughput at 80 MHz 11ac: **330Mbps**
- WLAN Security
  - WPA/WPA2 Personal
  - Enterprise security (STA only)
  - WPS 2.0
- WLAN Encryption
  - WEP
  - TKIP
  - AES
- Operating modes
  - STA
  - SoftAP
  - P2P Group Owner and Client
  - STA + SoftAP
  - STA + P2P Group Owner
  - STA + P2P Client
  - Support for multiple BSSID (Two softAPs and a STA can operate concurrently)
- Power Save
  - Module power saving features
    - Idle mode power save / Deep sleep
    - Legacy Protocol Power save / Beacon Mode Power Save
    - WMM-PS / UAPSD
    - Tx power-saving feature (Green TX)
  - Host power saving features
    - Offloading features: ARP, GTK, Neighbor solicitation (NS) offloading to the FW
- WMM and WMM-PS
- DFS Client
- Transmit beam forming
- 11r/FT roaming and Legacy fast roaming

## 2.2 Bluetooth Features

- Bluetooth 5.0
  - BR/EDR + HS
  - Bluetooth Low Energy
- WLAN Bluetooth coexistence

- Supports Bluetooth for Class-1 and Class-2 transmissions without requiring an external power amplifier
- BLE secure connections
- BLE concurrent central and peripheral
- BLE GATT based profiles
- Bluetooth stack
    - Bluez
- BT stack core profiles
    - SDP, L2CAP, GAP - Bluetooth 5.0
    - Serial Port Profile - SPP over BR/EDR
    - Audio / A2DP
        - Source 1.2
        - Sink 1.2
    - Voice / HFP (Hands Free Profile)
        - Audio Gateway (1.7)
        - Hands Free (1.6)
        - CVSD audio coding over SCO
        - mSBC audio coding over eSCO
- HID
    - HID over BR/EDR
    - HID over GATT

# 3 Module Block Diagram

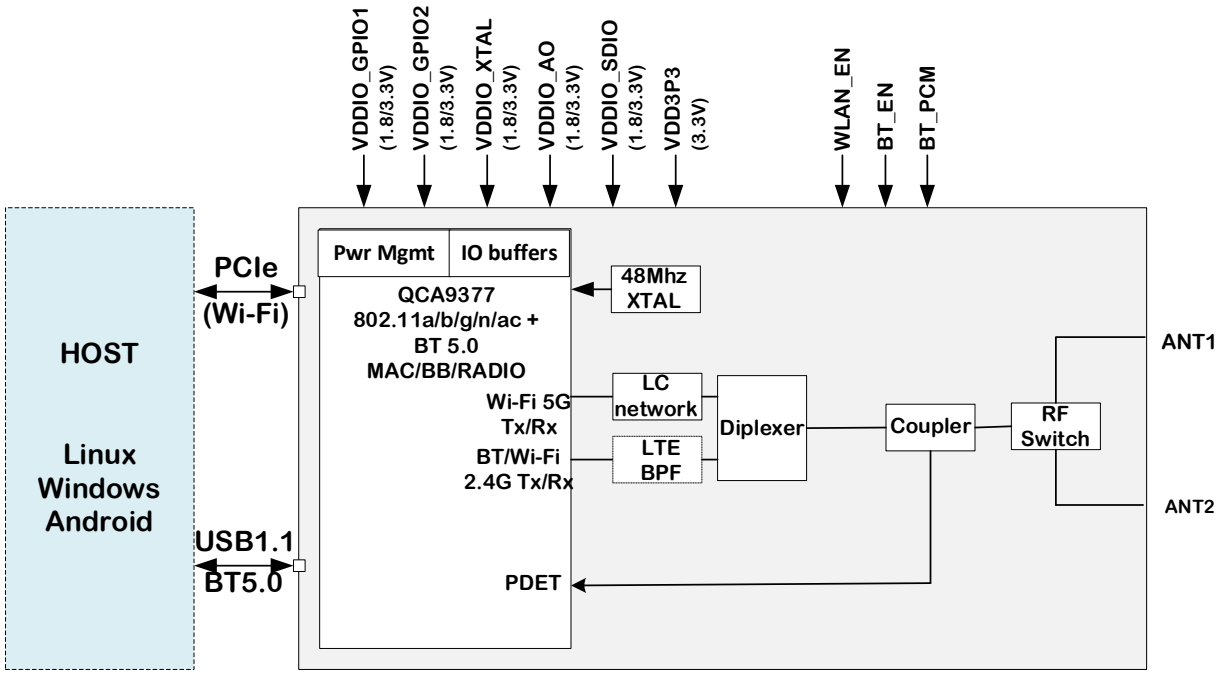


*Figure 1: BALI PCIe Block Diagram with Antenna Pin*

# 4 Pin Definition

## 4.1 Pin Diagram

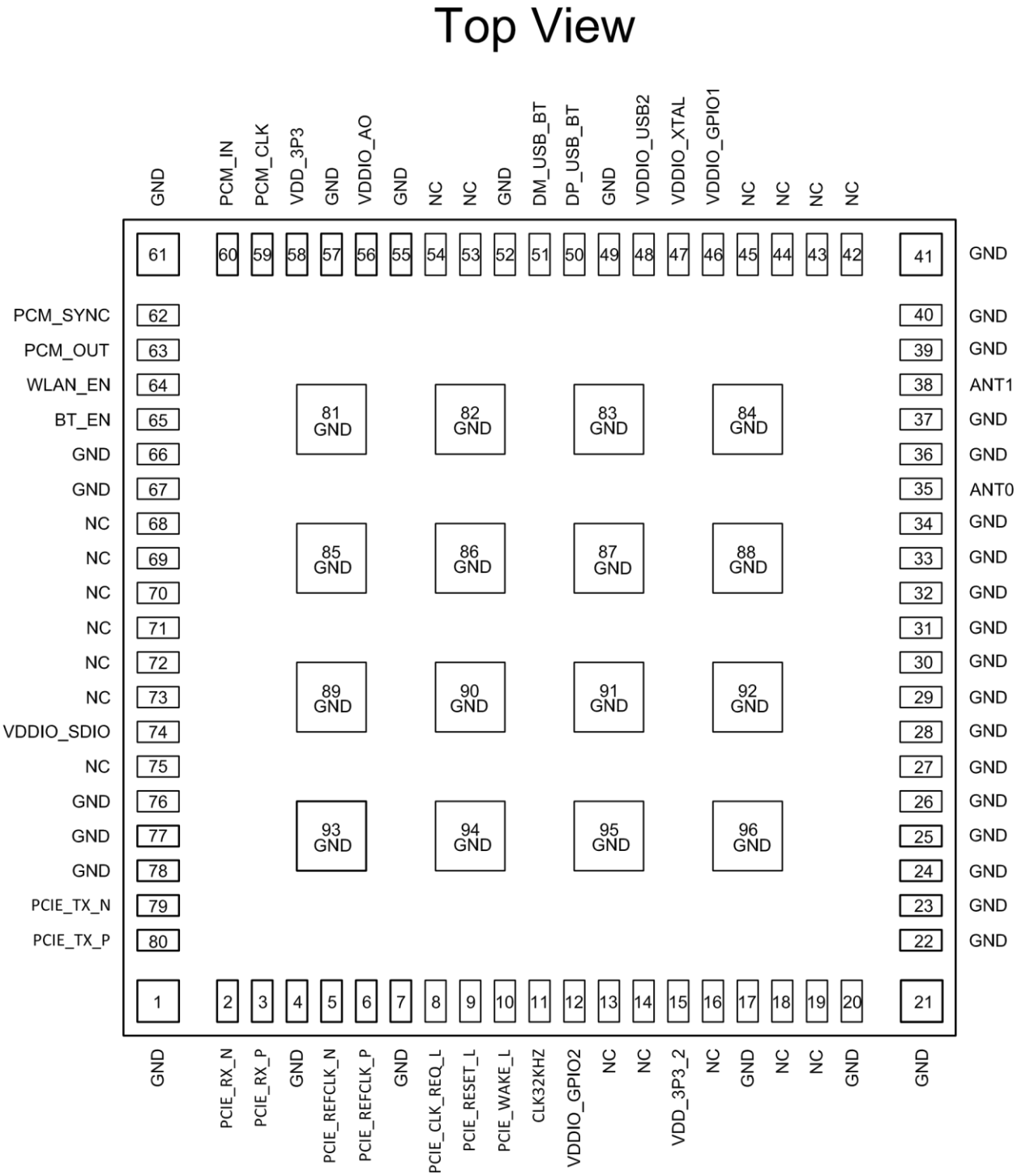


*Figure 2: BALI PCIe Pin Diagram*

## 4.2 Pin Table

| Pin Number | BALI_SW Pin Name PCIe | Pin Type | Voltage Ref | Description |
|---|---|---|---|---|
| 1 | GND | Ground | GND | Ground |
| 2 | PCIE_RX_N | AI | Internal Voltage | PCIe receive data negative |
| 3 | PCIE_RX_P | AI | Internal Voltage | PCIe receive data positive |
| 4 | GND | Ground | GND | Ground |
| 5 | PCIE_REFCLK_N | AI | Internal Voltage | PCIe reference clock negative |
| 6 | PCIE_REFCLK_P | AI | Internal Voltage | PCIe reference clock positive |
| 7 | GND | Ground | GND | Ground |
| 8 | PCIE_CLK_REQ_L | O | VDDIO_AO | PCIe reference clock request |
| 9 | PCIE_RESET_L | AI | VDDIO_GPIO2 | PCIe reset. Weak PD |
| 10 | PCIE_WAKE_L | O | VDDIO_GPIO2 | Request to service a function-initiated wake event for PCIe |
| 11 | CLK32KHZ | I | VDDIO_GPIO2 | Low frequency clock. 32KHz |
| 12 | VDDIO_GPIO2 | Power | 1.8V/3.3V | I/O power |
| 13 | NC | NC | NC | No connect |
| 14 | NC | NC | NC | No connect |
| 15 | VDD_3P3_2 | Power | 3.3V | Power |
| 16 | NC | NC | NC | No connect |
| 17 | GND | Ground | GND | Ground |
| 18 | NC | NC | NC | No connect |
| 19 | NC | NC | NC | No connect |
| 20 | GND | Ground | GND | Ground |
| 21 | GND | Ground | GND | Ground |
| 22 | GND | Ground | GND | Ground |
| 23 | GND | Ground | GND | Ground |
| 24 | GND | Ground | GND | Ground |
| 25 | GND | Ground | GND | Ground |
| 26 | GND | Ground | GND | Ground |
| 27 | GND | Ground | GND | Ground |
| 28 | GND | Ground | GND | Ground |
| 29 | GND | Ground | GND | Ground |
| 30 | GND | Ground | GND | Ground |
| 31 | GND | Ground | GND | Ground |
| 32 | GND | Ground | GND | Ground |

| | | | | |
|---|---|---|---|---|
| 33 | GND | Ground | GND | Ground |
| 34 | GND | Ground | GND | Ground |
| 35 | ANT0 | AI/AO | RF | Antenna Pin 0 |
| 36 | GND | Ground | GND | Ground |
| 37 | GND | Ground | GND | Ground |
| 38 | ANT1 | AI/AO | RF | Antenna Pin 1 |
| 39 | GND | Ground | GND | Ground |
| 40 | GND | Ground | GND | Ground |
| 41 | GND | Ground | GND | Ground |
| 42 | NC | NC | NC | No connect |
| 43 | NC | NC | NC | No connect |
| 44 | NC | NC | NC | No connect |
| 45 | NC | NC | NC | No connect |
| 46 | VDDIO_GPIO1 | Power | 1.8V/3.3V | I/O power for GPIO1 domain |
| 47 | VDDIO_XTAL | Power | 1.8V/3.3V | I/O power for crystal |
| 48 | VDDIO_USB2 | Power | 3.3V | I/O power for USB2 domain |
| 49 | GND | Ground | GND | Ground |
| 50 | DP_USB_BT | AI/AO | VDDIO_USB2 | USB1.1 DP for BT |
| 51 | DM_USB_BT | AI/AO | VDDIO_USB2 | USB1.1 DM for BT |
| 52 | GND | Ground | GND | Ground |
| 53 | NC | NC | NC | No connect |
| 54 | NC | NC | NC | No connect |
| 55 | GND | Ground | GND | Ground |
| 56 | VDDIO_AO | Power | 1.8V/3.3V | I/O power for Always On logic |
| 57 | GND | Ground | GND | Ground |
| 58 | VDD_3P3 | Power | 3.3V | Power |
| 59 | PCM_CLK | I/O | VDDIO_GPIO1 | BT PCM Clock |
| 60 | PCM_IN | I | VDDIO_GPIO1 | BT PCM IN |
| 61 | GND | Ground | GND | Ground |
| 62 | PCM_SYNC | I/O | VDDIO_GPIO1 | BT PCM SYNC |
| 63 | PCM_OUT | O | VDDIO_GPIO1 | BT PCM OUT |
| 64 | WLAN_EN | I | VDDIO_AO | WLAN enable. Active high |
| 65 | BT_EN | I | VDDIO_AO | Bluetooth enable. Active high |
| 66 | GND | Ground | GND | Ground |
| 67 | GND | Ground | GND | Ground |
| 68 | NC | NC | NC | No connect |
| 69 | NC | NC | NC | No connect |

| | | | | |
|---|---|---|---|---|
| 70 | NC | NC | NC | No connect |
| 71 | NC | NC | NC | No connect |
| 72 | NC | NC | NC | No connect |
| 73 | NC | NC | NC | No connect |
| 74 | VDDIO_SDIO | Power | 1.8V/3.3V | I/O power for SDIO domain |
| 75 | NC | NC | NC | No connect |
| 76 | GND | Ground | GND | Ground |
| 77 | GND | Ground | GND | Ground |
| 78 | GND | Ground | GND | Ground |
| 79 | PCIE_TX_N | AO | internal Voltage | PCIe TX data negative |
| 80 | PCIE_TX_P | AO | internal Voltage | PCIe TX data positive |
| 81 | GND | Ground | GND | Ground |
| 82 | GND | Ground | GND | Ground |
| 83 | GND | Ground | GND | Ground |
| 84 | GND | Ground | GND | Ground |
| 85 | GND | Ground | GND | Ground |
| 86 | GND | Ground | GND | Ground |
| 87 | GND | Ground | GND | Ground |
| 88 | GND | Ground | GND | Ground |
| 89 | GND | Ground | GND | Ground |
| 90 | GND | Ground | GND | Ground |
| 91 | GND | Ground | GND | Ground |
| 92 | GND | Ground | GND | Ground |
| 93 | GND | Ground | GND | Ground |
| 94 | GND | Ground | GND | Ground |
| 95 | GND | Ground | GND | Ground |
| 96 | GND | Ground | GND | Ground |

*Table 2: BALI PCIe Pin Table*

# 5 Electrical Specification

## 5.1 Absolute Maximum Ratings

Below table summarizes the absolute maximum ratings and Table 2 lists the recommended operating conditions for the BALI. Beyond the range of Absolute maximum ratings/Recommended operating conditions may cause permanent damage.

Functional operation under these conditions only recommended.

**NOTE:** Operating condition ranges define those limits within which the functionality of the device is guaranteed. Where application information is given, it is advisory only and does not form part of the specification.

| Symbol | Parameter | Min | Max | Unit |
|---|---|---|---|---|
| VDDIO_GPIO1 | Voltage supply | -0.3 | 4.0 | V |
| VDDIO_GPIO2 | Voltage supply | -0.3 | 4.0 | V |
| VDDIO_SDIO | Voltage supply | -0.3 | 4.0 | V |
| VDDIO_AO | Voltage supply | -0.3 | 4.0 | V |
| VDDIO_XTAL | Voltage supply | -0.3 | 4.0 | V |
| VDD3P3 | 3.3 V supply | -0.3 | 4.0 | V |
| $RF_{IN}$ | Maximum RF input (reference to 50 Ωinput) | | +10 | dBm |
| $T_{STORE}$ | Storage temperature | -45 | -45 to 135 | °C |
| ESD | Electrostatic discharge tolerance | 2000 | | V |
| 3.3 V I/O VIH MAX | Maximum digital I/O input voltage for 3.3 V I/O supply | | VDD + 0.3 | V |
| 1.8 V I/O VIH MAX | Maximum digital I/O input voltage for 1.8 V I/O supply | | VDD + 0.2 | V |
| VIH MIN | Minimum digital I/O input voltage for 1.8 V or 3.3 V I/O supply | -0.3 | | V |

*Table 3: Absolute maximum ratings*

## 5.2 Recommended Operating Conditions

| Symbol | Parameter | Min | Typ | Max | Unit |
|---|---|---|---|---|---|
| VDD3P3 | 3.3 V supply | 3.135 | 3.3 | 3.465 | V |
| VDDIO_GPIO2 | Voltage supply | 1.71 | 1.8 or 3.3 | 3.46 | V |
| VDDIO_GPIO1 | Voltage supply | 1.71 | 1.8 or 3.3 | 3.46 | V |
| VDDIO_AO | Voltage supply | 1.71 | 1.8 or 3.3 | 3.46 | V |
| VDDIO_SDIO | Voltage supply | 1.71 | 1.8 or 3.3 | 3.46 | V |
| VDDIO_USB2 | Voltage supply | 3.135 | 3.3 | 3.465 | V |

| | | | | | |
|---|---|---|---|---|---|
| $T_{OP}$ | Operating Temperature | -40 | – | 85 | °C |
| $T_{CASE}$ | Case temperature | 0 | – | 115 | °C |
| PsiJT | Junction to the top center of the package thermal resistance | – | – | 0.5 | °C/W |

*Table 4: Recommended operating conditions*

## 5.3 Digital logic characteristics

| Symbol | Parameter | Comments | Min | Typ | Max | Unit |
|---|---|---|---|---|---|---|
| VIH | High-level input voltage | | 0.7 x VDDIO | - | VDDIO + 0.3 | V |
| VIL | Low-level input voltage | | -0.3 | - | 0.3 x VDDIO | V |
| VSHYS | Schmitt hysteresis | | – | 1.8 V IO: 375<br>3.3 V IO: 645 | – | mV |
| RPULL | Input pull resistor | Up or down | – | 1.8 V IO: 120<br>3.3 V IO: 70 | – | kΩ |
| VOH | High-level output voltage | | 0.9 x VDDIO | – | VDDIO | V |
| VOL | Low-level output voltage | | 0 | – | 0.1 x VDDIO | V |

*Table 5: General DC electrical characteristics (for VDDIO = 3.3V I/O operation)*

## 5.4 Performance Specifications

### 5.4.1 WLAN RF Characteristics

| Symbol | Parameter | Conditions | Min | Typ | Max | Unit |
|---|---|---|---|---|---|---|
| **Synthesizer composite characteristics for 2.4 GHz** | | | | | | |
| $F_C$ | Center channel frequency | Center frequency at 5 MHz spacing | 2.412 | – | 2.472 | GHz |
| $F_{REF}$ | Reference oscillator frequency | ±20 ppm | – | 48 | – | MHz |
| $TS_{POWERUP}$ | Time for power up (from sleep) | | – | 0.2 | – | Ms |
| **Synthesizer composite characteristics for 5 GHz** | | | | | | |
| $F_C$ | Center channel frequency | Center frequency at 5 MHz spacing | 5.150 | | 5.825 | GHz |
| $F_{REF}$ | Reference oscillator frequency | ±20 ppm | – | 48 | – | MHz |

| | | | | | | |
|---|---|---|---|---|---|---|
| $TS_{POWERUP}$ | Time for power up (from sleep) | | – | 0.2 | – | Ms |
| **Transmit output power accuracy** | | | | | | |
| $A_{PC}$ | Accuracy of transmit power control at 2.4 GHz at room temperature | | – | ±1.9 | – | dB |
| $A_{PC}$ | Accuracy of transmit power control at 5 GHz at room temperature | | – | ±2.4 | – | dB |

*Table 6: WLAN RF characteristics per chain operation*

**Note:** All $A_{PC}$ numbers assume a test conducted with a 50 Ω load.

#### 5.4.1.1 Transmit Power at 2.4 GHz

**Note:** All typical values may vary ±1.5 dB

| **Standard** | **Modulation** | **Data rates** | **2.4 GHz: Transmit power with IEEE 802.11 EVM and spectral mask compliance at chip output at 25°C** | | | |
|---|---|---|---|---|---|---|
| | | **Index** | **802.11b/g** | **802.11n/ac 20 MHz** | **802.11n/ac 40 MHz** | **Unit** |
| | | | **Typ** | **Typ** | **Typ** | |
| 802.11b | BPSK | 1 Mbps | 16.0 | – | – | dBm |
| | QPSK | 2 Mbps | 16.0 | – | – | dBm |
| | CCK | 5.5 Mbps | 16.0 | – | – | dBm |
| | CCK | 11 Mbps | 16.0 | – | – | dBm |
| 802.11g | BPSK | 6 Mbps | 18.0 | – | – | dBm |
| | BPSK | 9 Mbps | 18.0 | – | – | dBm |
| | QPSK | 12 Mbps | 18.0 | – | – | dBm |
| | QPSK | 18 Mbps | 18.0 | – | – | dBm |
| | 16 QAM | 24 Mbps | 18.0 | – | – | dBm |
| | 16 QAM | 36 Mbps | 18.0 | – | – | dBm |
| | 64 QAM | 48 Mbps | 18.0 | – | – | dBm |
| | 64 QAM | 54 Mbps | 18.0 | – | - | dBm |
| 802.11n/ac | BPSK | MCS0 | – | 18.0 | 16.0 | dBm |

| | | | | | | |
|---|---|---|---|---|---|---|
| | QPSK | MCS1 | – | 18.0 | 16.0 | dBm |
| | QPSK | MCS2 | – | 18.0 | 16.0 | dBm |
| | 16 QAM | MCS3 | – | 18.0 | 16.0 | dBm |
| | 16 QAM | MCS4 | – | 18.0 | 16.0 | dBm |
| | 64 QAM | MCS5 | – | 18.0 | 16.0 | dBm |
| | 64 QAM | MCS6 | – | 18.0 | 16.0 | dBm |
| | 64 QAM | MCS7 | – | 18.0 | 16.0 | dBm |
| 802.11ac | 256 QAM | MCS8 | – | 15.0 | 16.0 | dBm |
| | 256 QAM | MCS9 | – | 15.0 | 16.0 | dBm |

*Table 7: Transmit power at 2.4 GHz*

#### 5.4.1.2 Transmit Power at 5 GHz

**Note:** All typical values may vary ±1.5 dB

| **Standard** | **Modulation** | **Data rates** | **5 GHz: Transmit power with IEEE 802.11 EVM and spectral mask compliance at chip output at 25°C** | | | | |
|---|---|---|---|---|---|---|---|
| | | **Index** | **802.11a** | **802.11n/ac 20 MHz** | **802.11n/ac 40 MHz** | **802.11ac 80 MHz** | **Unit** |
| | | | **Typ** | **Typ** | **Typ** | **Typ** | |
| 802.11a | BPSK | 6 Mbps | 14.0 | – | – | – | dBm |
| | BPSK | 9 Mbps | 14.0 | – | – | – | dBm |
| | QPSK | 12 Mbps | 14.0 | – | – | – | dBm |
| | QPSK | 18 Mbps | 14.0 | – | – | – | dBm |
| | 16 QAM | 24 Mbps | 14.0 | – | – | – | dBm |
| | 16 QAM | 36 Mbps | 14.0 | – | – | – | dBm |
| | 64 QAM | 48 Mbps | 14.0 | – | – | – | dBm |
| | 64 QAM | 54 Mbps | 14.0 | – | – | – | dBm |
| 802.11n/ac | BPSK | MCS0 | – | 14.0 | 12.0 | _ | dBm |
| | QPSK | MCS1 | – | 14.0 | 12.0 | _ | dBm |
| | QPSK | MCS2 | – | 14.0 | 12.0 | _ | dBm |

| | | | | | | | |
|---|---|---|---|---|---|---|---|
| | 16 QAM | MCS3 | – | 14.0 | 12.0 | _ | dBm |
| | 16 QAM | MCS4 | – | 14.0 | 12.0 | _ | dBm |
| | 64 QAM | MCS5 | – | 14.0 | 12.0 | _ | dBm |
| | 64 QAM | MCS6 | – | 14.0 | 12.0 | _ | dBm |
| | 64 QAM | MCS7 | – | 14.0 | 12.0 | _ | dBm |
| 802.11ac | 256 QAM | MCS8 | – | 14.0 | 14.0 | 14.0 | dBm |
| | 256 QAM | MCS9 | – | 14.0 | 14.0 | 14.0 | dBm |

*Table 8: Transmit power at 5 GHz*

#### 5.4.1.3 Receive minimum input level sensitivity at chip input at 2.4 GHz for configuration at 25°C

**Note:** All typical values may vary ±1.0 dB

| **Standard** | **Modulation** | **Data rates** | **2.4 GHz: IEEE receive minimum input level sensitivity at chip input with 10% packet error rate (100 bytes at 11b and 1000 bytes at OFDM) at 25°C, LDPC enabled** | | | |
|---|---|---|---|---|---|---|
| | | **Index** | **802.11b/g** | **802.11n/ac 20 MHz** | **802.11n/ac 40 MHz** | **Unit** |
| | | | **Typ** | **Typ** | **Typ** | |
| 802.11b | BPSK | 1 Mbps | -99.5 | – | – | dBm |
| | CCK | 11 Mbps | -92.0 | – | – | dBm |
| 802.11g | BPSK | 6 Mbps | -94.0 | – | – | dBm |
| | 64 QAM | 54 Mbps | -78.0 | – | – | dBm |
| 802.11n/ac | BPSK | 1SS MCS0 | – | -94.0 | -91.0 | dBm |
| | 64 QAM | 1SS MCS7 | – | -77.0 | -72.0 | dBm |
| 802.11ac | 256 QAM | 1SS MCS8 | – | -73.0 | -70.0 | dBm |
| | 256 QAM | 1SS MCS9 | – | – | -69.0 | dBm |

*Table 9: Receive minimum input level sensitivity at chip input at 2.4 GHz for configuration at 25°C*

### Receive minimum input level sensitivity at chip input at 5 GHz at 25°C

**Note:** All typical values may vary ±1.0 dB

| Standard | Mod | Data rates | 5 GHz: IEEE receive minimum input level sensitivity at chip input with 10% packet error rate (1000 bytes) at 25°C, LDPC enabled | | | | |
|---|---|---|---|---|---|---|---|
| | | Index | 802.11a | 802.11n/ac 20 MHz | 802.11n/ac 40 MHz | 802.11n/ac 80 MHz | Unit |
| | | | Typ | Typ | Typ | Typ | |
| 802.11a | BPSK | 6 Mbps | -94.0 | – | – | – | dBm |
| | 64 QAM | 54 Mbps | -77.0 | – | – | – | dBm |
| 802.11n/ac | BPSK | 1SS MCS0 | – | -94.0 | -91.0 | -88.0 | dBm |
| | 64 QAM | 1SS MCS7 | – | -76.5 | -74.0 | -70.0 | dBm |
| 802.11ac | 256 QAM | 1SS MCS8 | – | – | -72.5 | -68.0 | dBm |
| | 256 QAM | 1SS MCS9 | – | – | – | -64.0 | dBm |

*Table 10: Receive minimum input level sensitivity at chip input at 5 GHz at 25°C*

#### 5.4.1.4 Maximum input level sensitivity at 25°Cs

| Maximum input level sensitivity at chip input | | | | | |
|---|---|---|---|---|---|
| Standard | Band | Modulation | IEEE max input level | Max input level at chip input | Unit |
| 802.11b | 2.4 GHz | DBPSK | -4 | -5.5 | dBm |
| 802.11b | 2.4 GHz | CCK | -10 | -5 | dBm |
| 802.11g | 2.4 GHz | OFDM | -20 | -10 | dBm |
| 802.11a | 5 GHz | OFDM | -30 | -10 | dBm |
| 802.11n | 2.4 GHz | OFDM | -20 | -10 | dBm |
| | 5 GHz | OFDM | -30 | -10 | dBm |
| 802.11ac | 2.4 GHz | OFDM | -30 | -10 | dBm |
| | 5 GHz | OFDM | -30 | -10 | dBm |

*Table 11: Maximum input level sensitivity at 25°C*

### 5.4.2 BT RF Characteristics

**NOTE:** The performance may vary slightly depending on the environment.

#### 5.4.2.1 BT Tx

BT RF transmitter specifications are listed according to three operating modes: the basic rate, the enhanced data rate, and low-energy mode. All typical performance specifications, unless noted otherwise, are based on operation at room temperature (+25°C) using default parameter settings and nominal supply voltages.

| Parameter | Comments | BT specification | Min | Typ | Max | Units |
|---|---|---|---|---|---|---|
| RF frequency range | | 2.4 ≤ f ≤ 2.4835 | 2402 | – | 2480 | MHz |
| RF output power (GFSK) | Maximum power setting | | - | 5.7 | - | dBm |
| Transmit power accuracy | | | – | ±2 | – | dB |
| Transmit power control range | | ≥ 16 | 30 | 40 | – | dB |
| Transmit power control step size | Each control step of power change | 2 ≤ step size ≤ 8 | 2 | – | 8 | dB |
| 20 dB bandwidth | GFSK only | ≤ 1000 | – | 923 | 1000 | kHz |
| Adjacent channel power (±2 channels) | F = F0 ± 2 MHz | ≤ -20 | – | -48 | - | dBm |
| Adjacent channel power (±3 channels) | F = F0 ± 3 MHz | ≤ -40 | – | -52 | - | dBm |
| Frequency deviations | Δf1AVG maximum modulation | 140 ≤ Δf1AVG ≤ 175 | - | 152 | - | kHz |
| | Δf2AVG maximum modulation | ≥ 115 | - | 163 | – | kHz |
| | Δf2AVG/Δf1AVG | ≥ 0.80 | - | 1.07 | – | – |
| | Packets exceeding 115 kHz (Δf2MAX) | | 99.9 | – | – | % |
| Frequency tolerance | | ≤ ±75 | -75 | – | +75 | kHz |
| Carrier frequency drift | Maximum drift rate within 50 µs | ≤ ±20 | -20 | – | +20 | kHz/50 µs |
| | Maximum length 1-slot packet | ≤ ±25 | -25 | – | +25 | kHz |

| | | | | | | |
|---|---|---|---|---|---|---|
| | Maximum length 3-slot packet | ≤ ±40 | -40 | – | +40 | kHz |
| | Maximum length 5-slot packet | ≤ ±40 | -40 | – | +40 | kHz |

*Table 12: BT basic rate transmitter performance at 25°C*

#### 5.4.2.2 BT EDR rate transmitter performance at 25°C

| Parameter | Comments | BT specification | Min | Typ | Max | Units |
|---|---|---|---|---|---|---|
| RF frequency range | | 2.4 ≤ f ≤ 2.4835 | 2402 | – | 2480 | MHz |
| RF output power | π/4DQPSK | | | 6.8 | | dBm |
| | 8DPSK | | | 6.8 | | dBm |
| Transmit power accuracy | | | – | ± 2 | – | dB |
| Transmit power control range | | | | 40 | | dB |
| EDR transmit power control step size | Each control step of power change | 2 ≤ step size ≤ 8 | 2 | | 8 | dB |
| EDR differential phase encoding | | ≥ 99 | – | 100 | – | % |
| DEVM for π/4DQPSK | > 99% of measured blocks | ≤ 99 | 99 | – | – | % |
| | RMS for any measured block | ≤ 20 | – | 6 | 13 | % |
| | Peak | ≤ 35 | – | 8 | 25 | % |
| DEVM for 8DPSK | > 99% of measured blocks | ≤ 99 | 99 | – | – | % |
| | RMS for any measured block | ≤ 13 | – | 6 | 13 | % |
| | Peak | ≤ 25 | – | 8.64 | 25 | % |
| **Maximum carrier frequency stability** | | | | | | |
| Block error (ωo) | π/4DQPSK of error for RMS DEVM, all blocks | ≤ ±10 | -10 | -0.899 | +10 | kHz |
| | 8DPSK of error for RMS DEVM, all blocks | | -10 | -1.5 | +10 | kHz |

| | | | | | | |
|---|---|---|---|---|---|---|
| Packet error (ωj) | π/4DQPSK of initial error, all packets | ≤ ±75 | -75 | 27.75 | +75 | kHz |
| | 8DPSK of initial error, all packets | | -75 | 28 | +75 | kHz |
| Total error (ωj + ωo) | π/4DQPSK of total blocks | ≤ ±75 | -75 | 26.851 | +75 | kHz |
| | 8DPSK of total blocks | | -75 | 26.5 | +75 | kHz |
| **Adjacent channel power** | | | | | | |
| Adjacent channel power (±1 channels) | F = F0 ± 1 MHz | ≤ -26 | – | -36 | – | dBm |
| Adjacent channel power (±2 channels) | F = F0 ± 2 MHz | ≤ -20 | – | -37 | – | dBm |
| Adjacent channel power (±3 channels) | F ≥ F0 ± 3 MHz | ≤ -40 | – | -47 | – | dBm |

*Table 13: BT EDR rate transmitter performance at 25°C*

#### 5.4.2.3 BT low-energy mode of transmitter performance

| Parameter | Comments | BT specification | Min | Typ | Max | Units |
|---|---|---|---|---|---|---|
| RF frequency range | | 2.4 ≤ f ≤ 2.4835 | 2402 | – | 2480 | MHz |
| Average RF output power | Maximum output power setting | | – | 6.6 | – | dBm |
| Transmit power accuracy | | | – | ± 2 | – | dB |
| In-band emissions | | | | | | |
| | F = FTX ± 2 MHz | | – | – | -20 | dBm |
| | F ≥ FTX ± 3 MHz | | – | – | -30 | dBm |
| **Modulation characteristics** | | | | | | |
| Δf1AVG | Recorded over 10 test packets | | 225 | 250 | 275 | kHz |
| Δf2MAX | | | 99.9 | – | – | % |
| Δf2MAX / Δf1AVG | | | 0.8 | 1.1 | – | – |
| **Carrier frequency offset and drift** | | | | | | |
| fn – fTX, n = 0, 1, 2,…,k | fTX is the nominal TX | | -150 | – | +150 | kHz |

| | | | | | | |
|---|---|---|---|---|---|---|
| \|f0 – fn \|, n=2, 3, …,k | frequency | | – | – | 50 | kHz |
| \|f1 – f0 \| | | | – | – | 20 | kHz |
| \|fn – fn-5 \|, n = 2, 3,…,k | | | – | – | 20 | kHz |

*Table 14: BT low-energy mode of transmitter performance*

#### 5.4.2.4 BT Rx

BT RF receiver specifications are listed according to three operating modes: the basic rate the enhanced data rate and low-energy mode. All typical performance specifications, unless noted otherwise, are based on operation at room temperature (+25°C) using default parameter settings and nominal supply voltages.

| Parameter | Comments | BT specification | Min | Typ | Max | Units |
|---|---|---|---|---|---|---|
| RF frequency range | | 2.4 ≤ f ≤ 2.4835 | 2402 | – | 2480 | MHz |
| Sensitivity | BER ≤ 0.1% | ≤ -70 | – | -96 | -91 | dBm |
| Maximum usable input | BER ≤ 0.1% | ≥ -20 | 0 | 10 | – | dBm |
| Maximum level of Inter modulation interference | | > -39 | -39 | -33 | – | dBm |
| **Carrier to interference ratios (C/I)3 BER ≤ 0.1%** | | | | | | |
| Co-channel | | 11 | – | – | 11 | dB |
| Adjacent channel | F = FTX ± 1 MHz | 0 | – | – | 0 | dB |
| | F = FTX ± 2 MHz | -30 | – | – | -30 | dB |
| | F ≥ FTX ± 3 MHz | -40 | – | – | -40 | dB |
| Out of band blocking3,6 (measured without band pass filter) | | | | | | |
| BT | 30 to 2000 MHz | | -10 | – | – | dBm |
| | 2000 to 2400 MHz | | -27 | – | – | dBm |
| | 2500 to 3000 MHz | | -27 | – | – | dBm |
| | 3000 to 12750 MHz | | -10 | – | – | dBm |

*Table 15: Basic rate receiver performance*

#### 5.4.2.5 Enhanced data rate receiver performance

| Parameter | Comments | BT specification | Min | Typ | Max | Units |
|---|---|---|---|---|---|---|
| RF frequency range | | 2.4 ≤ f ≤ 2.4835 | 2402 | – | 2480 | MHz |
| Sensitivity (BER ≤ 0.1%) | π/4DQPSK | ≤ -70 | – | -95 | -91 | dBm |
| | 8DPSK | ≤ -70 | – | -88 | -84 | dBm |
| Maximum usable input (BER ≤ 0.1%) | π/4DQPSK | ≥ -20 | -15 | – | – | dBm |
| | 8DPSK | ≥ -20 | -15 | – | – | dBm |
| **Carrier to interference ratios (C/I)3, BER ≤ 0.1%** | | | | | | |
| Co-channel | π/4DQPSK | ≤ ±13 | – | – | 13 | dB |
| | 8DPSK | ≤ ±20 | – | – | 21 | dB |
| Adjacent channel F = Fc ± 1 MHz | π/4DQPSK | ≤ 0 | – | – | 0 | dB |
| | 8DPSK | ≤ 5 | – | – | 5 | dB |
| Adjacent channel F = Fc ± 2 MHz | π/4DQPSK | ≤ -30 | – | – | -30 | dB |
| | 8DPSK | ≤ -25 | – | – | -25 | dB |
| Adjacent channel F = Fc ± 3 MHz | π/4DQPSK | ≤ -40 | – | – | -40 | dB |
| | 8DPSK | ≤ -33 | – | – | -33 | dB |

*Table 16: Enhanced data rate receiver performance*

#### 5.4.2.6 Low-energy mode receiver performance

| Parameter | Comments | BT specification | Min | Typ | Max | Units |
|---|---|---|---|---|---|---|
| RF frequency range | | 2.4 ≤ f ≤ 2.4835 | 2402 | – | 2480 | MHz |
| Sensitivity | BER ≤ 0.1% | | | -99 | | dBm |
| Intermodulation | | | -50 | | | dBm |
| Maximum input signal level | | | 0 | 10 | | dBm |
| PER report integrity | | | 50 | | | % |
| **Carrier to interference ratios (C/I)** | | | | | | |
| Carrier to interference ratios (C/I) | Co-channel | | | | 20 | dB |
| | F = FC ± 1 MHz | | | | 15 | dB |
| | F = FC ± 2 MHz | | | | -17 | dB |

| | | | | | | |
|---|---|---|---|---|---|---|
| | F = FC ± 3 MHz | | | | -27 | dB |
| Out of band blocking | 30 to 2000 MHz | | -30 | | | dBm |
| | 2003 to 2399 MHz | | -35 | | | dBm |
| | 2484 to 2997 MHz | | -35 | | | dBm |
| | 3 GHz to 12.75 GHz | | -30 | | | dBm |

*Table 17: Low-energy mode receiver performance*

# 6 Software

## 6.1 Software Architecture

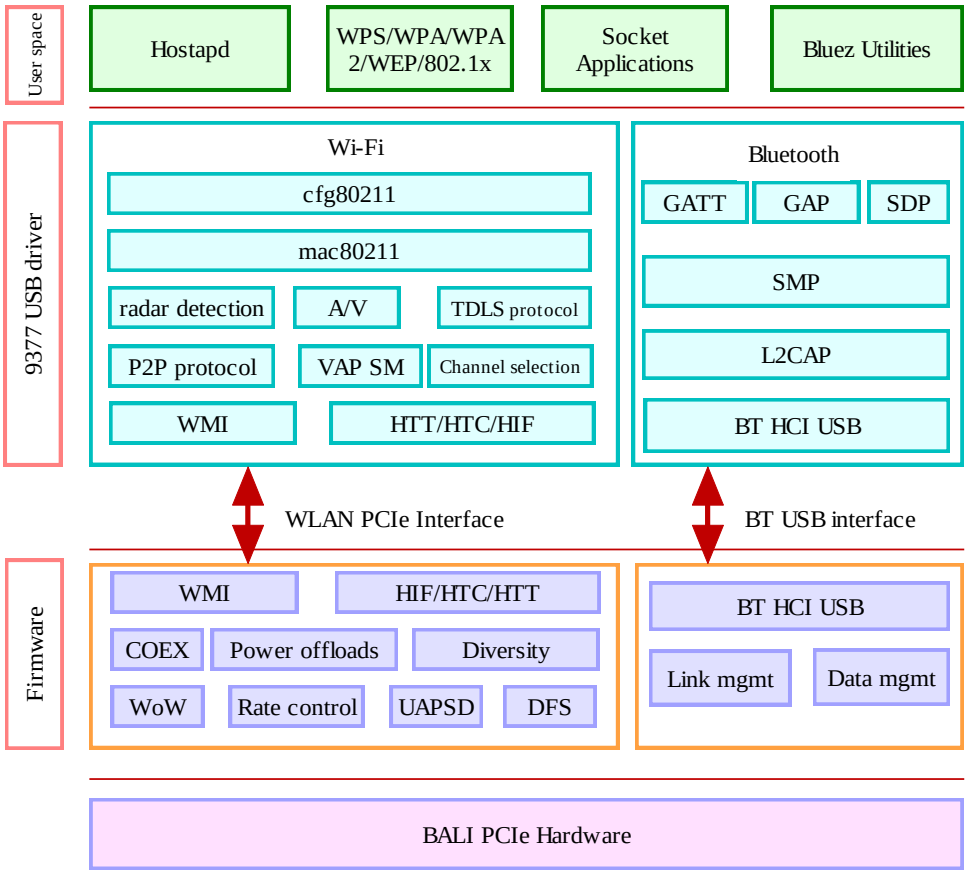


Figure 3: BALI PCIe Software Architecture

## 6.2 WLAN

Drivers are available for Linux (Kernel Version 4.4.15, 4.9.11 and 4.11), Android Nougat and Windows 10

- Refer to PCIe DVK User Guide for more details about driver and testing procedures

## 6.3 Bluetooth

- Support for Bluez stack
- Available both for embedded boards and the x86 platforms

Please contact iVativ support for more details about Bluetooth documentation

# 7 Package Description

## 7.1 Mechanical characteristics

| Parameter | Value (L X W X H) | Units |
|---|---|---|
| Module Dimensions | 11.75 X 12 X 1.6 | mm |
| Tolerance | +/- 0.15 | mm |

*Table 18: Mechanical characteristics*

## 7.2 Physical Dimensions, Pad Location and Landing Pattern

Please see 'BALI series Module Integration Guide (MIG)'

# 8 Regulatory Qualifications and Approvals

BALI series modules hold full modular approvals and are certified for FCC, IC, CE/ETSI and TELEC for use in USA, Canada, Europe and Japan respectively. End product manufacturers can inherit the module approvals for compliance testing of their device by strictly following grantee's compliance guidelines for module integration and operation and can avoid further testing of module transmitter function.

For detailed information on how to integrate BALI series modules for leveraging the module certification, please see 'BALI series Regulatory Compliance App Note'.

## 8.1 FCC Compliance

BALI series modules are intended for OEM integrators only. These integrators should make sure that the end product using BALI series module uses only authorized antennas and is compliant to all rules.
End user manual shall include all the required regulatory information given in this manual.

### 8.1.1 FCC Compliance Statement

*This equipment has been tested and found to compliant with part 15 of the FCC Rules. These limits are designed to provide reasonable protection against harmful interference in a residential installation. This equipment generates, uses and can radiate radio frequency energy and, if not installed and used in accordance with the instructions, may cause harmful interference to radio communications. However, there is no guarantee that interference will not occur in a particular installation. If this equipment does cause harmful interference to radio or television reception, which can be determined by turning the equipment off and on, the user is encouraged to try to correct the interference by one or more of the following measures:*

- Reorient or relocate the receiving antenna.
- Increase the separation between the equipment and receiver.
- Connect the equipment into an outlet on a circuit different from that to which the receiver is connected.
- Consult the dealer or an experienced radio/TV technician for help.

**§15.19 Statement**

This device complies with Part 15 of the FCC Rules. Operation is subject to the following two conditions: (1) this device may not cause harmful interference, and (2) this device must accept any interference received, including interference that may cause undesired operation.

**§15.21 Information to user:**

**Warning:** changes or modifications not expressly approved by the party responsible for compliance could void the user's authority to operate the equipment.

### 8.1.2 RF Exposure compliance statement

This Module complies with FCC radiation exposure limits set forth for an uncontrolled environment. This equipment should be installed and operated with a minimum distance of 20cm between the radiator and your body. This transmitter must not be co-located or operating in conjunction with any other antenna or transmitter except in accordance with FCC multi-transmitter guidelines.

### 8.1.3 Labelling Instruction for Host Product Integrator

Please notice that if the FCC identification number is not visible when the module is installed inside another device, then the outside of the device into which the module is installed must also display a label referring to the enclosed module. This exterior label can use wording such as the following:

**"Contains FCC ID: 2AYLDI95"** or

**"Contains Transmitter Module FCC ID: 2AYLDI95"**

*§ 15.19* Labelling requirements shall be complied on end user device.

Labelling rules for special device, please refer to *§2.925, § 15.19 (a)(5)* and relevant KDB publications. For E-label, please refer to *§2.935*.

### 8.1.4 Installation Notice to Host Product Manufacturer

The OEM integrator is responsible for ensuring that the end-user has no manual instruction to remove or install module.

**RF exposure compliance instruction**

The module is limited to installation in mobile application, a separate approval is required for all other operating configurations, including portable configurations with respect to §*2.1093*, co-location with another transmitter and difference in antenna configurations.

Host product manufacturer shall at least provide information of minimum separation distance to end users in RF exposure compliance statement to end users in their end-product manuals.

### 8.1.5 Antenna Change Notice to Host manufacturer

Module integrators are recommend using antenna which is certified with this module mentioned in this manual. Module integrators can use their own antenna but must ensure it is of same type and of equal or less gain as of certified antenna. No retesting of this system configuration is required. Refer to FCC Part 15.20 (c)(4).

If you desire to increase antenna gain and either change antenna type or use same antenna type certified, a Class II permissive change application is required to be filed by us, or you (host manufacturer) can take responsibility through the change in FCC ID (new application) procedure followed by a Class II permissive change application based on new emissions testing. Please perform testing on frequency bands where the antenna gain is highest, worst-case band-edges based on original filing, and only on frequency bands where the antenna gain is highest. See §2.1043. Contact Ivativ representative before adding different antennas(The antenna is not a trace antenna).

### 8.1.6 FCC other Parts, Part 15B Compliance Requirements for Host product manufacturer

This modular transmitter is only FCC authorized for the specific rule parts listed on our grant, host product manufacturer is responsible for compliance to any other FCC rules that apply to the host not covered by the modular transmitter grant of certification.

Host manufacturer in any case shall ensure host product which is installed and operating with the module is in compliant with Part 15B requirements.

Please note that For a Class B or Class A digital device or peripheral, the instructions furnished in the user manual of the end-user product shall include statement set out in *§15.105 Information to the user* or such similar statement and place it in a prominent location of host product manual. Original texts from FCC Rules are as following you may refer to:

For Class B

*Note: This equipment has been tested and found to comply with the limits for a Class B digital device, pursuant to part 15 of the FCC Rules. These limits are designed to provide reasonable protection against harmful interference in a residential installation. This equipment generates, uses and can radiate radio frequency energy and, if not installed and used in accordance with the instructions, may cause harmful interference to radio communications. However, there is no guarantee that interference will not occur in a particular installation. If this equipment does cause harmful interference to radio or television reception, which can be determined by turning the equipment off and on, the user is encouraged to try to correct the interference by one or more of the following measures:*
*—Reorient or relocate the receiving antenna.*
*—Increase the separation between the equipment and receiver.*
*—Connect the equipment into an outlet on a circuit different from that to which the receiver is connected.*
*—Consult the dealer or an experienced radio/TV technician for help.*

For Class A

*Note: This equipment has been tested and found to comply with the limits for a Class A digital device, pursuant to part 15 of the FCC Rules. These limits are designed to provide reasonable protection against harmful interference when the equipment is operated in a commercial environment. This equipment generates, uses, and can radiate radio frequency energy and, if not installed and used in accordance with the instruction manual, may cause harmful interference to radio communications. Operation of this equipment in a residential area is likely to cause harmful interference in which case the user will be required to correct the interference at his own expense.*

Additionally, investigative spot check measurements are strongly recommended to verify the full system compliance after module integration and operating in intended use case. For more information on end product test guidance please check KDB 996369 D04 Module Integration Guide V02.

## 8.2 IC

BALI series radio transmitter IC:26840-I95 has been approved by Innovation, Science and Economic Development Canada to operate with the antenna types listed below, with the maximum permissible gain indicated. Antenna types not included in this list that have a gain greater than the maximum gain indicated for any type listed are strictly prohibited for use with this device.

A list of all antenna types

| Item # | Part Number | Manufacturer | Description | Gain dBi |
|---|---|---|---|---|
| 1 | GW.59.3153 | Taoglas | 2.4GHz/5.1~5.85GHz RP_SMA male dipole antenna. 50 Ohm impedance | 2.4 - 2.5GHz: 2.37dBi<br>5.15 - 5.85GHz: 2.93dBi |

Cet émetteur radio IC:26840-I95 a été approuvé par innovation, sciences et développement économique Canada pour fonctionner avec les types d'antennes énumérés ci - dessous et afficher le gain maximal autorisé. Les types d'antennes qui ne sont pas inclus dans cette liste sont strictement interdits avec cet appareil si leur gain est supérieur au gain maximal de l'un des types énumérés.

Liste de tous les types d'antennes

| Item # | Part Number | Manufacturer | Description | Gain dBi |
|---|---|---|---|---|
| 1 | GW.59.3153 | Taoglas | 2.4GHz/5.1~5.85GHz RP_SMA male dipole antenna. 50 Ohm impedance | 2.4 - 2.5GHz: 2.37dBi<br>5.15 - 5.85GHz: 2.93dBi |

## 8.2.1 ISED compliance statement

This device contains license-exempt transmitter(s)/receiver(s) that comply with Innovation, Science and Economic Development Canada's license-exempt RSS(s). Operation is subject to the following two conditions:
(1) This device may not cause interference.
(2) This device must accept any interference, including interference that may cause undesired operation of the device.

L'émetteur/récepteur exempt de license contenu dans le présent appareil est conforme aux CNR d'Innovation, Sciences et Développement économique Canada applicables aux appareils radio exempts de licence. L'exploitation est autorisée aux deux conditions suivantes :
(1) L'appareil ne doit pas produire de brouillage;
(2) L'appareil doit accepter tout brouillage radioélectrique subi, même si le brouillage est susceptible d'en compromettre le fonctionnement.

The user manual for LE-LAN devices shall contain instructions related to the restrictions mentioned in the above sections, namely that:

i. the device for operation in the band 5150–5250 MHz is only for indoor use to reduce the potential for harmful interference to co-channel mobile satellite systems;

i. le dispositif utilisé dans la bande 5150-5250 MHz est réservé à une utilisation en intérieur afin de réduire le risque de brouillage préjudiciable aux systèmes mobiles par satellite dans le même canal;

### 8.2.2 ISED Radiation Exposure statement

This equipment complies with IC RSS-102 radiation exposure limits set forth for an uncontrolled environment. This equipment should be installed and operated with minimum distance 20 cm between the radiator and your body.
Cet équipement est conforme aux limites d'exposition aux radiations IC CNR-102 établies pour un environnement non contrôlé. Cet équipement doit être installé et utilisé avec une distance minimale de 20 cm entre le radiateur et votre corps.

### 8.2.3 End Product Labeling instruction

Please notice that if the IC identification number is not visible when the module is installed inside another device, then the outside of the device into which the module is installed must also display a label referring to the enclosed module. This exterior label can use wording such as the following:

“Contains IC:26840-I95” or any similar wording that expresses the same meaning may be used.

L’étiquette d’homologation d’un module d’Innovation, Sciences et Développement économique Canada devra être posée sur le produit hôte à un endroit bien en vue, en tout temps. En l’absence d’étiquette, le produit hôte doit porter une étiquette sur laquelle figure le numéro d’homologation du module d’Innovation, Sciences et Développement économique Canada, précédé du mot « contient », ou d’une formulation similaire allant dans le même sens et qui va comme suit :

“Contient IC:26840-I95” est le numéro d’homologation du module

## 8.3 CE

BALI series modules comply with the essential requirements and other relevant provisions of the Radio Equipment Directive (RED) 2014/53/EU. BALI series modules are compliant with directive 2011/65/EU (EU RoHS 2) and its amendment directive 2015/863 (EU RoHS 3). In European market, it is the end product manufacturer who is ultimately responsible for the compliance of their device.

For more information on EU regulatory compliance of BALI series modules, please see BALI series Declaration of Conformity and RoHS Declaration. Test reports are available on request.

## 8.4 TELEC

BALI Series modules comply with Japanese regulatory requirements of MIC certification Item 19, Article 2, Paragraph 1. Test reports are available on request.

## 8.5 Pre-Approved antennas

BALI series modules are certified with the following antennas.

| Item # | Part Number | Manufacturer | Description | Gain dBi |
|---|---|---|---|---|
| 1 | GW.59.3153 | Taoglas | 2.4GHz/5.1~5.85GHz RP_SMA male dipole antenna. 50 Ohm impedance | 2.4 - 2.5GHz: 2.37dBi<br>5.15 - 5.85GHz: 2.93dBi |

*Table 19: Approved Antennas*

# 9 Product Shipping, Storage and Handling

## 9.1 Packaging Information

The BALI series modules are delivered as hermetically sealed trays and reels. For more information, please refer to 'Ivativ Package Shipping, Storage and Handling Guide'.

## 9.2 Storage and Baking Instructions

BALI modules are moisture sensitive devices and are rated at MSL 3. The new packages contain desiccate to absorb moisture and humidity indicator card to display the moisture level maintained during storage and shipment. If the card recommends baking, bake the parts in accordance with JEDEC standard J-STD-033. Floor life for these modules is 168 hours of factory conditions (≤ 30°C, 60% RH). For more information, please refer to 'Ivativ Package Shipping, Storage and Handling Guide'.

## 9.3 Mounting process and soldering recommendations

Please see 'BALI series Module Integration Guide'.

# 10 Product label and ordering information

The label of BALI series includes important product information.

Below figure illustrates BALI PCIe Product labeling, it includes: The Data code, Lot number, Certifications, Model number and Logo. Table 20 illustrates the complete description about BALI Product labeling.

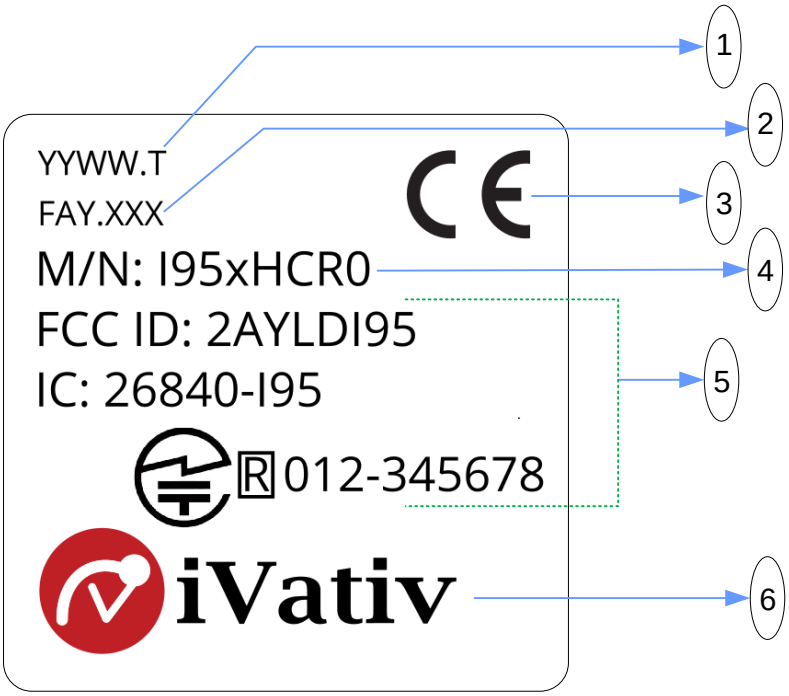


*Figure 4: Module Label*

The table below describes the markings on the label.

| Reference | Description |
|---|---|
| 1 | Date Code. YYWW.T: Year/Week/Temp Grade |
| 2 | Lot Number. FAY.XXX<br>FAY: Fab, assembly and single digit year of make<br>XXX: Lot number |
| 3 | CE Mark |
| 4 | Model number. Where 'x' indicates host interface<br>0- SDIO interface<br>1- PCIe interface<br>2- USB interface |
| 5 | Certification IDs and GITEKI mark |
| 6 | Ivativ Logo. Round logo symbol indicates the pin 1, unless marked specifically |

*Table 20: Module Label Description*

## 10.1 Part ordering

**BALI**

| | |
|---|---|
| I951HCR0-C0LT | BALI PCIe module with Antenna Pin, Tray packing |
| I951HCR0-C0LR | BALI PCIe module with Antenna Pin, Tape and Reel packing |

*Table 21: Part Ordering for BALI*

**BALI - EVK/DVKs**

| | |
|---|---|
| I951HCR0-6L-EVK | BALI PCIe Industrial Temp, Antenna Pin EVK |
| I951HCR0-6L-DVK | BALI PCIe Industrial Temp, Antenna Pin DVK Kit |

*Table 22: Part ordering for BALI EVK/DVK*

# Contact Information

Please contact info@ivativ.com