Hanshow Shelf Edge Digital Signage HS-AT3701Product Manual

V1.0.0

HS-SIGNAGE-AT3701001

Hanshow Confidential

STATEMENT

This document and all its contents contained remain the proprietary material of Hanshow Technology Co., Ltd. (Hanshow) and are protected by Chinese laws and applicable international conventions on copyrights. Any reproduction, transmission, disclosure, revision, modification or use otherwise of this document or the whole or part of its contents, in whatever form and by whatever means, is not permitted without prior express written authorization from Hanshow. Offenders will be liable for any and all damages caused by their offence hereof and will be subject to all remedies that Hanshow is entitled to seek under applicable laws.

Hanshow Confidential

Hanshow Copyright Reserved ©

ABOUT THE DOCUMENT

The manual mainly introduces functions, structure, hardware parameters, performance, installation, and precautions for shelf edge digital signage HS-AT3701.

Thank you very much for shelf edge digital signage HS-AT3701.

Please read this manual carefully before using the device, retain the manual for subsequent use or for the next owner. If the instructions contained in this manual are insufficient to resolve issues that occur during device operation or maintenance, please contact Hanshow Technical Customer Service Center (China: 400-0365-305; Netherlands: 0800-022-5037; Belgium: 0800-71-335; France: 0800-91-7602; Thailand: 1800-011-185) directly, we will provide you with multi-channel technical services.

TARGET USERS

Hanshow Confidential

Hanshow Copyright Reserved ©

This document provides engineers with necessary data and related guidelines. Users mustmaster the basic knowledge on communication, DSP, and ARM. This document is applicable to:

- Testing engineers
- Technical support engineers
- Service engineers

SYMBOL DESCRIPTION

Icon	Description
⚠	Information indicated with this icon should be paid special attention to by the reader
🕮	Information indicated with this icon is the explanation on the formal text for the readers to comprehend the text better
[X-X]	It means special noun definition is provided here

Hanshow Copyright Reserved ©

Hanshow Confidential

EXPLANATION OF TERMS

Term	Expanded form	Description
LAN	Local Area Network	Local Area Network
LCD	Liquid Crystal Display	Liquid Crystal Display
RF	Radio Frequency	Radio Frequency
RS232	EIA-RS-232	EIA-RS-232
USB	Universal Serial Bus	Universal Serial Bus
Wi-Fi	Wireless Fidelity	Wireless Fidelity

Hanshow Confidential

Hanshow Copyright Reserved ©

Table of Contents

1 Overview 1
1.1 System structure 2
1.2 Performance 4
1.3 Functions 6
2 Hardware features 8
2.1 Specifications 8
2.2 Physical interfaces 12
2.3 Nameplate 14
2.4 Appearance parameters 17
3 Installation 18
3.1 Description 18
3.2 Installation accessories 20
4 Operations 23
4.1 Network settings 23
4.1.1 Wi-Fi settings 24

Hanshow Copyright Reserved ©

Hanshow Confidential

4.1.2 Ethernet settings 29
4.2 System upgrade 32
5 Activation 34
6 Packing list 36
6.1 Packing diagram 36
6.2 Package contents 37

Hanshow Confidential

Hanshow Copyright Reserved ©

1 Overview

HS-AT3701 is the first-generation shelf edge digital signage independently developed by Hanshow.With its high integration, HS-AT3701meets the requirements for higher performance, nice appearance, shelf match, appropriate space, and low power consumption of shelf edge digital signage; thus providing users with better marketing business experience.

HS-AT3701 can access the Internet by Wi-Fi connection in 2.4GHz/5GHz wireless frequency band, or access 100M Ethernet by cable connection from anRJ45 port, performing data transmission and information interaction with the backend cloud server.Equipped with a high-performance quad-core 64-bit ARM Cortex-A53 processor, and integrated with multi-functional modules such as Wi-Fi, 100M-PHY, and Video Codec, HS-AT3701 is Hanshow's multi-service product developed for digital shelf and marketing services.

Hanshow Confidential

Hanshow Copyright Reserved ©

1.1 System structure

The shelf edge digital signage system consists of shelf edge digital signage, Wi-Fi, and cloud data center (server). Shelf edge digital signage displays the data transmitted from the data center server, such as advertising videos and ESL information. The system structure is shown in *Figure 1-1*.

Hanshow Confidential

Hanshow Copyright Reserved ©

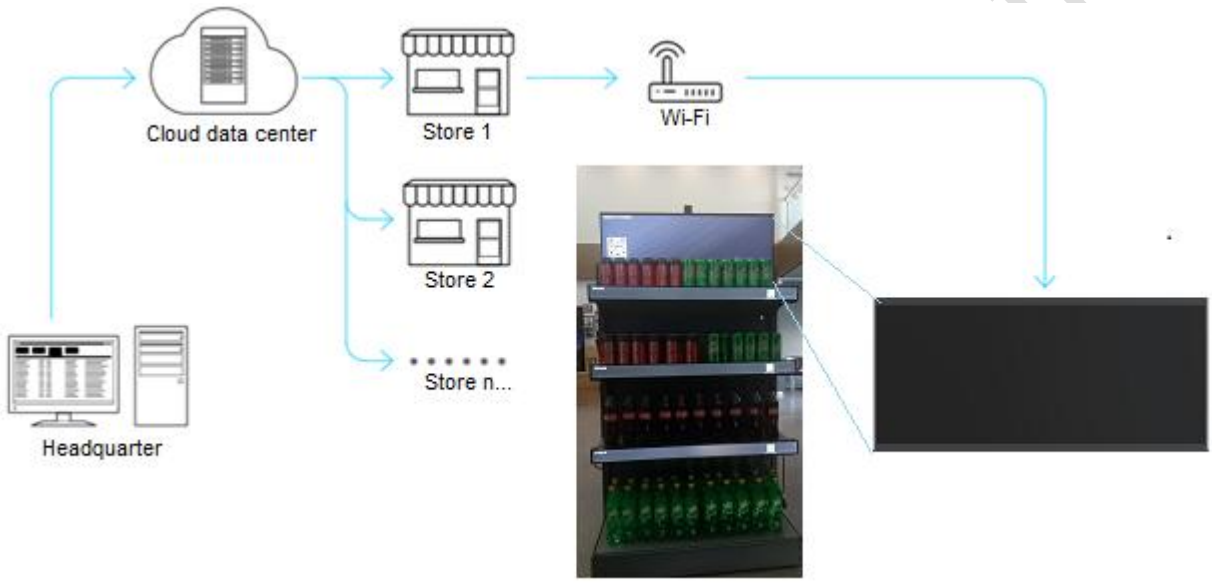

Figure 1-1 Shelf edge digital signage system structure

Hanshow Copyright Reserved ©

1.2 Performance

HS-AT3701 is an important component of Hanshow digital shelf and marketing system. As a terminal display device, it is responsible for displaying the data transmitted from the data center server. Connected with the digital marketing system through wireless network interface (Wi-Fi), HS-AT3701 establishes two-way 2.4GHz/5GHz wireless communication with Wi-Fi.

- Downlink: HS-AT3701receives Wi-Fi downlink packets and displays the data transmitted from the data center server, such as advertising videos and ESL information.
- Uplink: HS-AT3701 reports the collected sensor data to the cloud server.

Table 1-1 shows the basic configuration information of HS-AT3701.

Table 1-1 HS-AT3701basic configuration

Name	Description
Operating system	Android 7.0, responsible for data interaction with Wi-Fi, including registration of shelf edge digital signage, sensor data collection and processing, and data

Hanshow Copyright Reserved ©

Hanshow Confidential

Name	Description
	transmission. Supports online upgrade.
RF system	Supports Wi-Fi 2.4GHz/5GHz communication to ensure high data transmission rate and improve channel utilization.
Memory	1GB DDR4 + 8GB eMMC
Wi-Fi	2.4GHz/5GHz dual frequency, in accordance with IEEE 802.11ac/a/b/g/n standards, time-sharing
Bluetooth (optional)	Bluetooth V4.2(1/2/3Mbps)
Audio port	Dual channel 10W speaker
Power supply	DC12V-5Apower adapter/110V-220V AC power supply
Management configuration	Web configuration mode
LCD	36.3-inch shelf edge digital signage with1920*546 resolution

Hanshow Confidential

Hanshow Copyright Reserved ©

Name	Description
Serial port	In accordance with RS232 protocol, 4-pin connector
External USB	3*USB (mouse extension, U disk upgrade)
Ethernet port	Standard 100M Ethernet RJ45 port
Media playback	Video format: MPEG-1,MPEG-2,MPEG-4,H.263,H.264,VC1,RV, and othervideo formats Up to 1080p Image format: JPG,BMP,PNG,GIF and other image formats Rotate/slide show Up to 4096*4096

1.3 Functions

HS-AT3701 supports the following functions:

Hanshow Copyright Reserved ©
Hanshow Confidential

- Price display
- Promotion management
- Advertising management
- Advertising content management
- Precision marketing
- Split screen display
- Multi-screen splicing
- Scheduled distribution
- Multiple content formats
- 12V safe voltage
- Bracket customization

Hanshow Confidential

Hanshow Copyright Reserved ©

2 Hardware features

This chapter describes specifications, physical interfaces, nameplate information, and appearance parameters of HS-AT3701.

2.1 Specifications

Table 2-1 describes HS-AT3701 specifications.

Table 2-1 HS-AT3701 specifications

Power module	
Input voltage	DC 12V/AC 110V-240V
Maximum current	DC 12V adapter, power current requirement> 5A
Rated current	4.5A
Rated power	53W

Hanshow Copyright Reserved ©
Hanshow Confidential

Other	Overload/overheat protection
Main configuration	
CPUfrequency	2.0GHz quad-core 64-bit high-performance Cortex-A53 processor
Memory	1GB DDR4 + 8GB eMMC
Operating system	Android7.0
Wi-FiRF module (2.4GHz/5GHz module)	
Working frequency	2412~2462MHz, 5180~5320MHz & 5500~5700MHz & 5745~5805MHz
Channel bandwidth	20MHz
WLAN standard	IEEE 802.11 b/g/n
Maximum transmission rate	867Mbps
Transmit power	13dBm,14dBm,15dBm,17dBm
Antenna gain	2.5±0.5dbi(optional)

Hanshow Copyright Reserved ©
Hanshow Confidential

Antenna performance	2-way omnidirectional off-boardantenna
Ultra-high sensitivity	＜-85dBm
Ethernet module	
Connection rate	10/100M(adaptive)
Auto-negotiation	Supported
Polarity adaptation	Supported
DHCP	Supported
USB	
Voltage and current	2*USB 5Vvoltage, 0.5Acurrent; 1*USB 5V voltage, 2A current
Transmission rate	480Mbps(USB2.0)
Power consumption	
Idle power	12V voltage, 4.5 current

Hanshow Copyright Reserved ©
Hanshow Confidential

consumption	
Maximum power consumption	12V voltage, 5A current
Temperature	
Working temperature	-10℃ ~ 50℃
Storage temperature	-40℃ ~ 70℃
Display	
LCD	36.3-inch HD shelf edge digital signage
Resolution	1920*546
Viewable area	885.6mm (H) *252.1mm (V)
Viewing angle	89/89/89/89
Display mode	Normally black IPS

Hanshow Confidential

Hanshow Copyright Reserved ©

Contrast	4000:1
Brightness	500nit

2.2 Physical interfaces

HS-AT3701 physical interfaces are as shown in *Figure 2-1*.

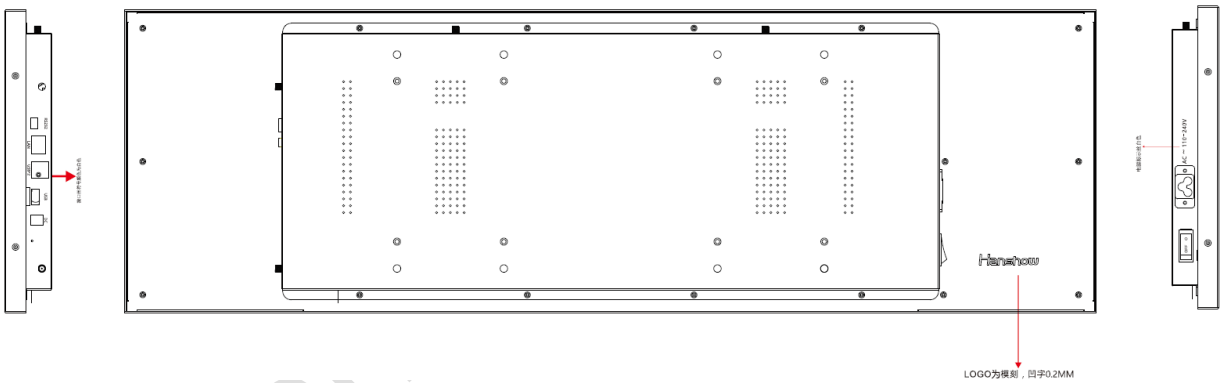

Figure 2-1 HS-AT3701 physical interfaces

Hanshow Copyright Reserved ©

Table 2-2 describes the function of each physical interfacefrom left to right and top to bottom.

Table 2-2 HS-AT3701interfacefunctions

	Interface name	Description
Left	RF port	Connected to external 2.4GHz/5GHz antenna
	RS232 port	4-pin connector, 12V power output, used to connect devicessupporting RS232 port
	LAN port	RJ45 port, 100M/10M adaptive Ethernet
	2*USB	Standard USB 2.0 port, used to connect salve devices such as U disk, 0.5A power supply capacity
	1*USB	Standard USB 2.0 port, used to connect salve devices such as U disk, 2A power supply capacity
	Power port	Used to connect DC power adapter. Hanshow provides standard 12V-5A adapter.

Hanshow Copyright Reserved ©
Hanshow Confidential

	Interface name	Description
	RF port	Connected to external 2.4GHz/5GHz antenna
Right	AC power port	AC110V-240V input
	AC power switch	Push-button switch to turn off/on AC power supply to the device

⚠ **Note:** Be sure to use the cables provided by Hanshow.

2.3 Nameplate

HS-AT3701 nameplate is as shown in *Figure 2-2*.

Hanshow Confidential

Hanshow Copyright Reserved ©

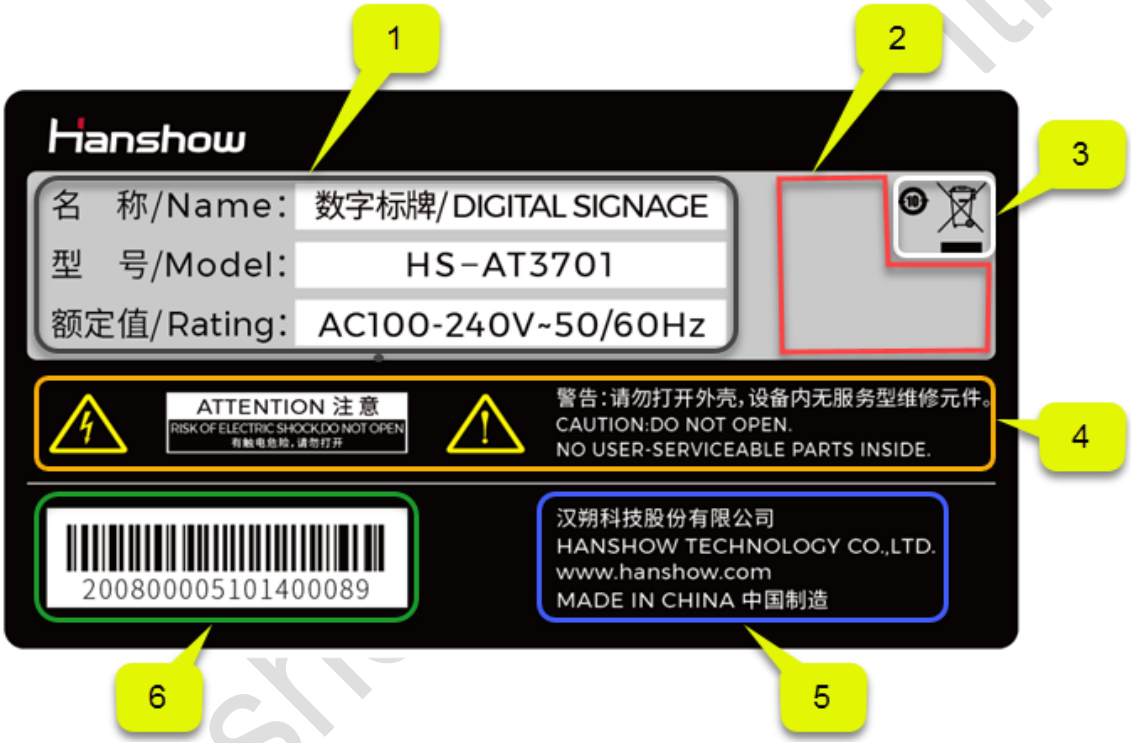

Figure 2-2 HS-AT3701 nameplate

Hanshow Copyright Reserved ©

Table 2-3 describes the information on HS-AT3701 nameplate.

Table 2-3 HS-AT3701nameplate information

No.	Area	Description
1	Upper-left gray box area	NAME: Product category MODEL: Unique model name in Hanshow RATING: Rated voltage and current
2	Upper red box area	Shows passed certification marks such as CCC, CE, FCC, and ROHS.
3	Upper-right white box area	Indicates the product lifetime is 10 years. The product cannot be discarded casually. It must be disposed of by a special recycling agency.
4	Middle yellow box area	Shows the precautions for use, transportation, storage, and other conditions.
5	Lower-right blue box area	Shows device manufacturer information.

Hanshow Copyright Reserved ©
Hanshow Confidential

No.	Area	Description
6	Lower-left green box area	Shows the unique serial number (SN) of product production.

2.4 Appearance parameters

Table 2-4 describes HS-AT3701 appearance parameters.

Table 2-4 HS-AT3701 appearance parameters

Name		Description
Structural materials	Frame	Cold rolled iron sheet
	Rear case	Cold rolled iron sheet
Length *Width *Height(mm*mm*mm)		910*280*44
Net weight (kg)		7
Color		Black

Hanshow Copyright Reserved ©
Hanshow Confidential

3 Installation

This chapter introduces HS-AT3701 installation and required accessories.

3.1 Description

HS-AT3701 needs to be installed on the top of shelf endcap for better effects of visual playback and marketing campaign, as shown in *Figure 3-1*.

Hanshow Confidential

Hanshow Copyright Reserved ©

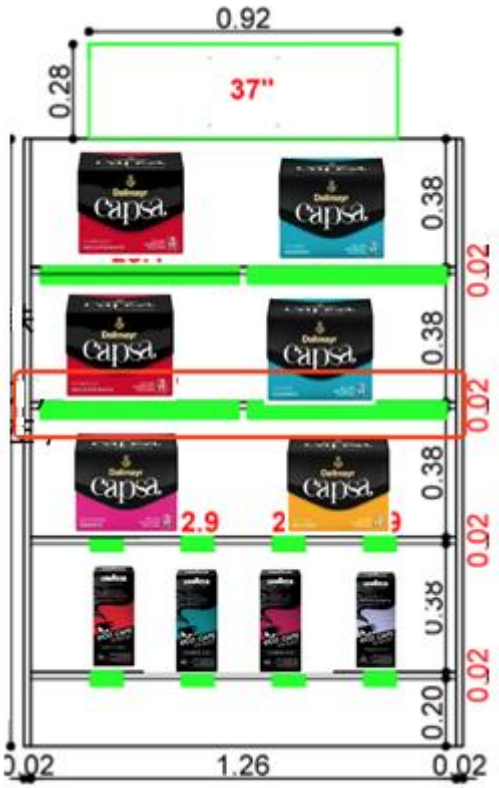

Hanshow Copyright Reserved ©

Figure 3-1 HS-AT3701installation

⚠ **Note:**

- It's recommended to leave at least 1 meter of free space in front of the display screen, in order that customers can have better experience on watching screen content.
- It's recommended to install the shelf edge digital signage in the middle or top of the shelf. The length of the shelf edge digital signage should match shelf length.
- The installation location should have good Wi-Fi coverage.
- The surrounding metal interference should be as little as possible. In particular, avoid cage interference effect.
- Be sure to install firmly to avoid loosening and falling off.

3.2 Installation accessories

*Figure 3-2*shows HS-AT3701 installation accessories.

Hanshow Copyright Reserved ©

Hanshow Confidential

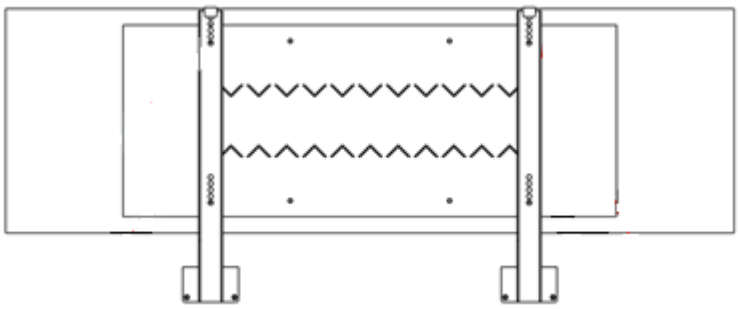

Figure 3-2HS-AT3701 standard installation accessories

It’s recommended to use hanging installation method, as shown in *Figure 3-3*.

Hanshow Copyright Reserved ©

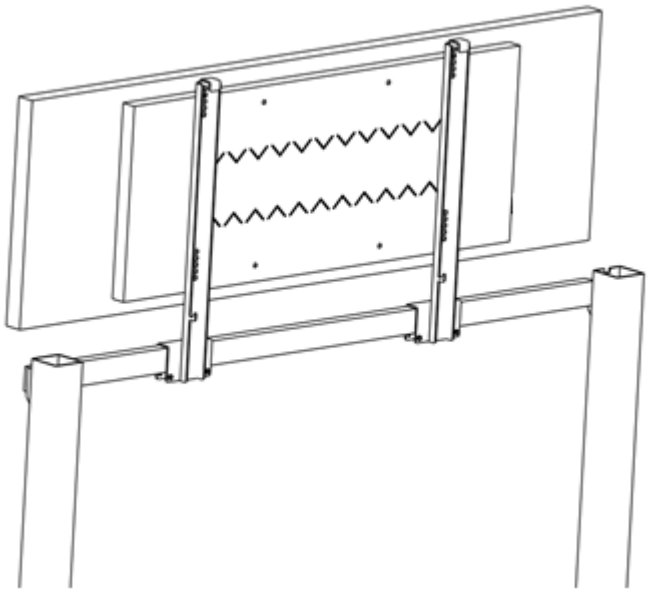

Figure 3-3 HS-AT3701 assembly diagram

Note: For information of detailed installation instructions and other installation methods, see *Hanshow Shelf Edge Digital Signage HS-AT3701 Installation Manual*.

Hanshow Copyright Reserved ©

4 Operations

This chapter describes network settings and system upgrade of HS-AT3701.

4.1 Network settings

HS-AT3701currently only supports direct operation of the device for network settings. HS-AT3701 support both Wi-Fi and Ethernet connections. You can configure network environment according to actual use scenarios.

1. On the device's system desktop, tap **Settings** to open the Settings page, as shown in *Figure 4-1*.

Hanshow Copyright Reserved ©
Hanshow Confidential

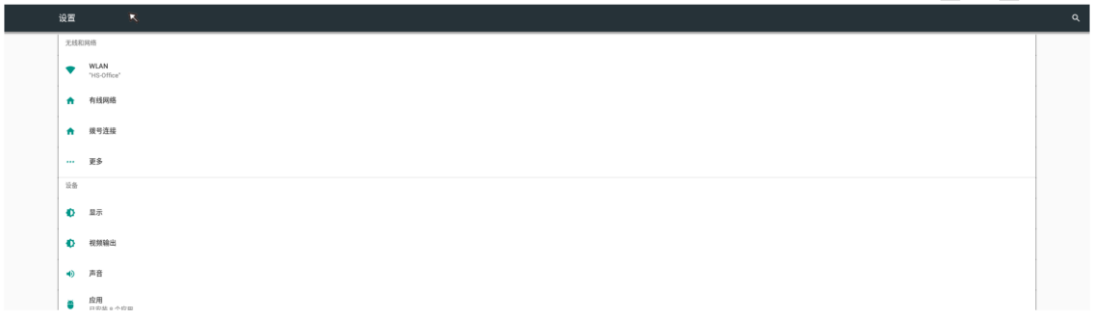

Figure 4-1Network settings selection page

2. Select **Wi-Fi** or **Ethernet**accordingto your network requirements.

4.1.1 Wi-Fisettings

Follow the steps below to configure Wi-Fi network connection:

1. Tap **Wi-Fi** to open the wireless network settings page.
2. On the upper-right corner of the page, tap the switch to turn on the Wi-Fi connection function. The system automatically searches for available wireless networks, and then lists available network access points, as shown in *Figure 4-2*.

Hanshow Copyright Reserved ©

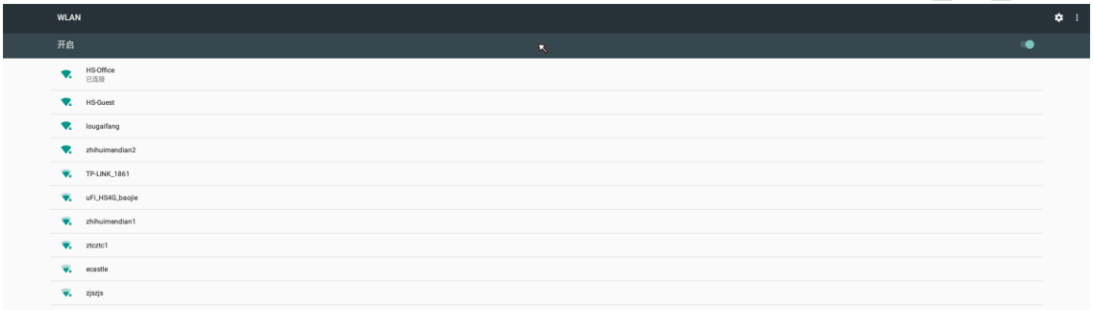

Figure 4-2 Turn on wireless network connection

3. Tap the access point you want to connect. The setting page for the selected wireless network opens.
4. If static IP setting is not required, enter the wireless network password directly, and then tap the **Complete** button on the soft keyboard. The system automatically connects to the wireless network, as shown in *Figure 4-3*. If the entered password is correct, the system connects to the wireless network successfully, and shows message indicating successful network connection. Thiscompletes the DHCP (dynamic IP assignment) configuration of the wireless network.

Hanshow Copyright Reserved ©

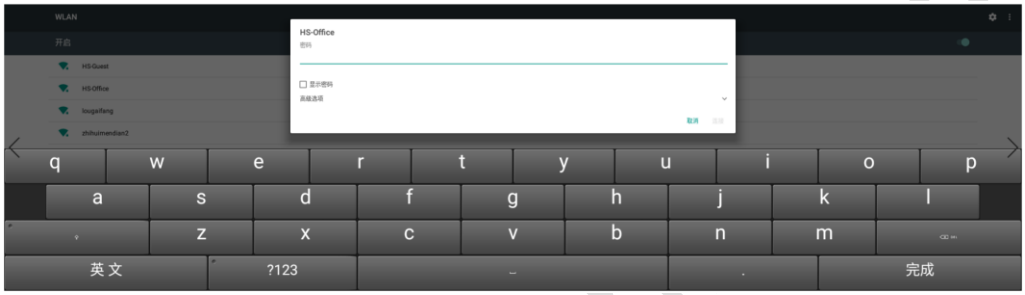

Figure 4-3 Enter wireless network password

If dynamic IP setting or other network setting is required, on the password input page, swipe down the page, and then tap **Advanced options**, as shown in *Figure 4-4*.

Hanshow Copyright Reserved ©

Figure 4-4 Tap Advanced options to set static IP

The bottom of the pageshows configuration options for the wireless network. *Table 4-1* describes configuration details.

Table 4-1Wireless network static IP configuration options

Configuration item	Description
Proxy	Network proxy, configuration item for network proxy server, can be configured manually or automatically.
Proxy server host name	Proxy server IP address, can be set when the proxy is configured manually.

Hanshow Copyright Reserved ©

Configuration item	Description
Proxy server port	Proxy server port number, can be set when the proxy is configured manually.
Do not use proxy for	Domain names that do not use proxy.The domain names configured here will not make network interactions through the proxy server. This configuration item can be set when the proxy is configured manually.
PAC URL	Automatic proxy configuration script, can be configured when the proxy is configured automatically.
IP setting	If it's set to static, device IP address needs to be manually configured. If it's set to DHCP, device IP address needs to be obtained from the DHCP server.
IP address	IP address, can be configured when IP setting is set to static.
Gateway	Gateway address, can be configured when DHCP is selected for IP settings.
Network prefix length	The bit length of the network prefix, usually 24, can be configured when DHCP is selected for IP settings.

Hanshow Copyright Reserved ©
Hanshow Confidential

Configuration item	Description
DNS	Domain name servers, including DNS1 and DNS2. DNS1 is the primary DNS server. Only when DNS1 cannot find IP addresses corresponding to domain names or when DNS1 is unavailable, can DNS2 configuration take effect. This configuration item can be configured when DHCP is selected for IP settings.

After the configuration is complete, tap the **Save** button. The system automatically connects to the wireless network according to the configurations. If the connection is successful, the screen displays “Connected”, as shown in *Figure 4-5*.

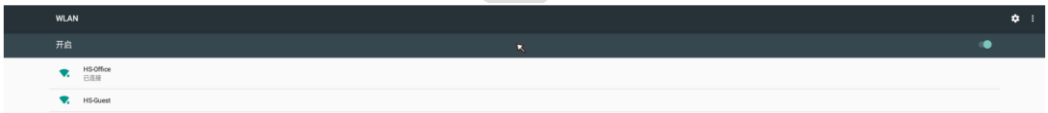

Figure 4-5 Wireless network connected successfully

4.1.2 Ethernet settings

Follow the steps below to configure Ethernet connection:

Hanshow Copyright Reserved ©

1. Tap **Ethernet** to open the Ethernet settings page.
2. On the upper-right corner of the page, tap the switch to turn on the Ethernet connection function. Ethernet settings also support DHCPand static IP settings, as shown in *Figure 4-6*.

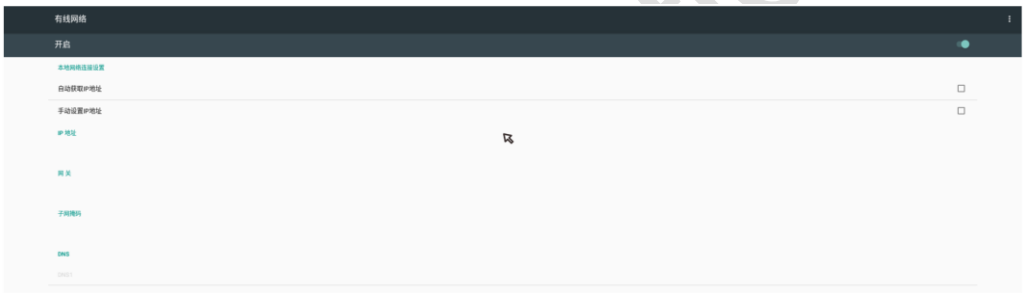

Figure 4-6Ethernet settings

Hanshow Copyright Reserved ©

3. Select **DHCP** or **Static IP**. If **Static IP** is selected, the bottom of the page shows some configuration items, as shown in *Table 4-2*.

Table 4-2Ethernet static IP configuration options

Configuration item	Description
IP address	Static IP address to be configured
Gateway	Gateway address to be configured
Subnet mask	Subnet mask to be configured
DNS	Domain name servers, including DNS1 and DNS2. DNS1 is the primary DNS server. Only when DNS1 cannot find IP addresses corresponding to domain names or when DNS1 is unavailable, can DNS2 configuration take effect. This configuration item can be configured when DHCP is selected for IP settings.

Hanshow Confidential

Hanshow Copyright Reserved ©

Note: After the manual configuration is complete, the system saves the configuration parameters. When switching between manual and automatic settings, the configuration does not need to be re-configured.

4.2 System upgrade

HS-AT3701supports two upgrade methods:

- Manual upgrade by U disk

  The file system of USB flash drive is FAT32. Create folder named **upgrade** under the root directory of the USB flash drive. Save the system upgrade compression package to the folder. After device startup, insert the USB flash drive. The system automatically upgrades.

- Automatic upgrade through the network

  The device should be connected to extranet, or a server should be deployed for upgrade in the intranet, so that the device can be upgraded through interaction with the server.

Hanshow Copyright Reserved ©
Hanshow Confidential

⚠ **Note:** Do not cut off power supply during the upgrade process. Power cut can damage the system.

Hanshow Confidential

Hanshow Copyright Reserved ©

5 Activation

Follow the steps below to activate HS-AT3701:

1. Before using shelf edge digital signage HS-AT3701, check and ensure the power cable connection and network cable connection are correct.
2. To use a power adapter for power supply, make sure to use a standard 12V power adapter, and the current capacity is at least 5A
3. After power-on, the backlight of HS-AT3701 display is on, and the system starts to start.
4. The startup time is about 35 seconds. After system startup, the screen displays standard system interface or preset playback content.
5. After system startup, configure network settings according to instructions in section *4.1*, for HS-AT3701 IP settings and other configurations.
6. If the configuration is correct and complete, HS-AT3701 automatically connects to Wi-Fi network. If the connection is successful, the network status indicator shows

Hanshow Copyright Reserved ©
Hanshow Confidential

the connection status and periodically reconnects until the connection is successful. Otherwise, “!” is displayed.

⚠ **Note:**To use 2.4GHz Wi-Fi, it’s recommended to set 2.4GHz channel to 1, 6, or 11.

Hanshow Confidential

Hanshow Copyright Reserved ©

6 Packing list

This chapter introduces the packing diagram and contents of HS-AT3701.

6.1 Packing diagram

Figure 6-1 shows the packing of HS-AT3701.

Hanshow Confidential

Hanshow Copyright Reserved ©

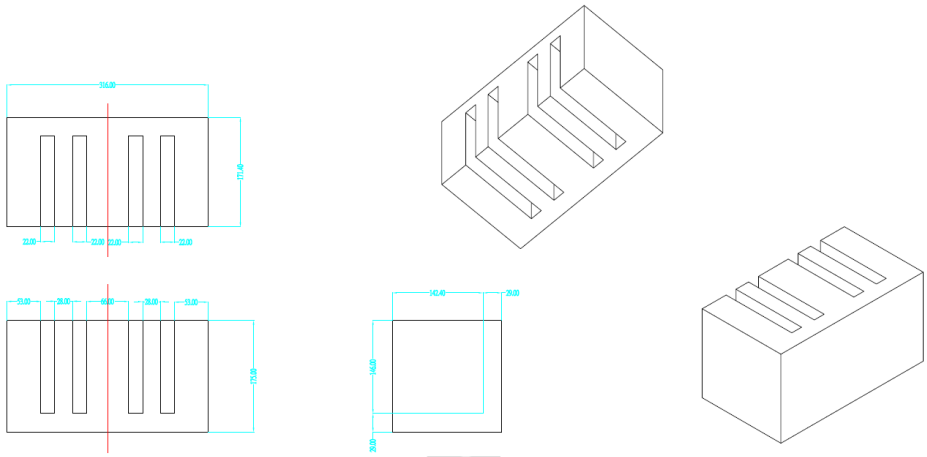

Figure 6-1 HS-AT3701 packing diagram

6.2 Package contents

HS-AT3701 package contains:

- 4 shelf edge digital signage HS-AT3701
- Two polyethylene foamcaps

Hanshow Copyright Reserved ©

- Two polyethylene foam trays
- Four plastic packaging bags
- One certificate

Hanshow Confidential

Hanshow Copyright Reserved ©

FCC Statement

This equipment has been tested and found to comply with the limits for a Class B digital device, pursuant to Part 15 of the FCC Rules. These limits are designed to provide reasonable protection against harmful interference in a residential installation. This equipment generates uses and can radiate radio frequency energy and, if not installed and used in accordance with the instructions, may cause harmful interference to radio communications. However, there is no guarantee that interference will not occur in a particular installation. If this equipment does cause harmful interference to radio or television reception, which can be determined by turning the equipment off and on, the user is encouraged to try to correct the interference by one or more of the following measures:

-- Reorient or relocate the receiving antenna.

-- Increase the separation between the equipment and receiver.

-- Connect the equipment into an outlet on a circuit different from that to which the receiver is connected.

-- Consult the dealer or an experienced radio/TV technician for help.

This device complies with part 15 of the FCC Rules. Operation is subject to the following two conditions:

(1) This device may not cause harmful interference, and (2) this device must accept any interference received, including interference that may cause undesired operation.

Changes or modifications not expressly approved by the party responsible for compliance could void the user's authority to operate the equipment.

The distance between user and device should be no less than 20cm.