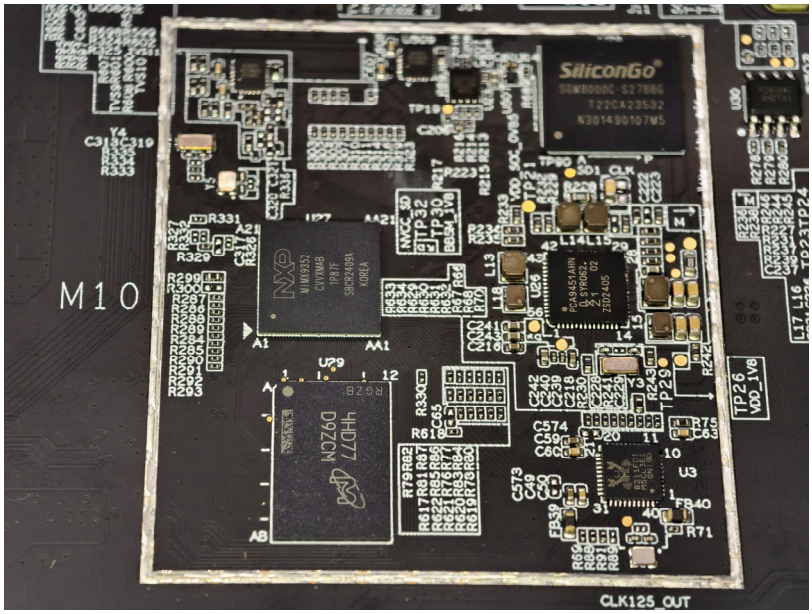
M10
SiliconGo
CLK125_OUT

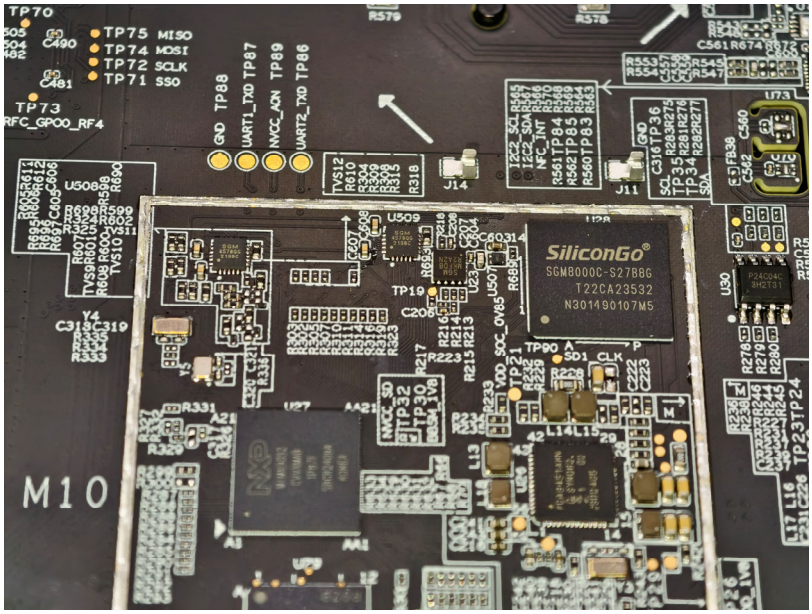
TP75 MISO
TP74 MOSI
TP72 SCLK
TP71 SS0
TP73
RFC_GPOO_RF4
GND TP88
UART1_TXD TP87
NCC_ACN TP89
UART2_TXD TP86
M10
SiliconGo
SGM8000C-S2788G
T22CA23532
N301490107M5

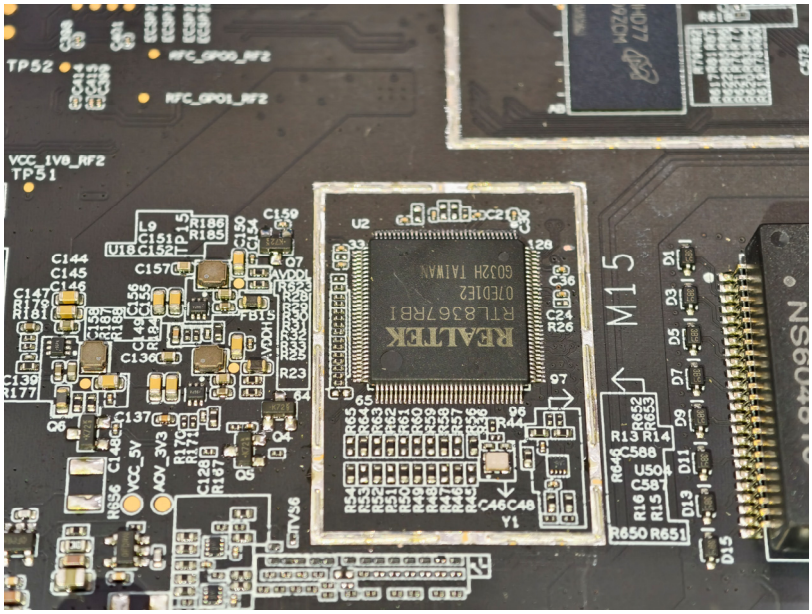
TP52
NFC_GPO0_RF2
NFC_GPO1_RF2
VCC_1V8_RF2
TP51
U2
REALTEK
RTL8367RB
M15
VCC_5V
AOV_3V3
Y1
R650 R651
R13 R14
C588
U50
R652
R653
R646
R16
R15
D15
D13
D11
D9
D7
D5
D3
D1

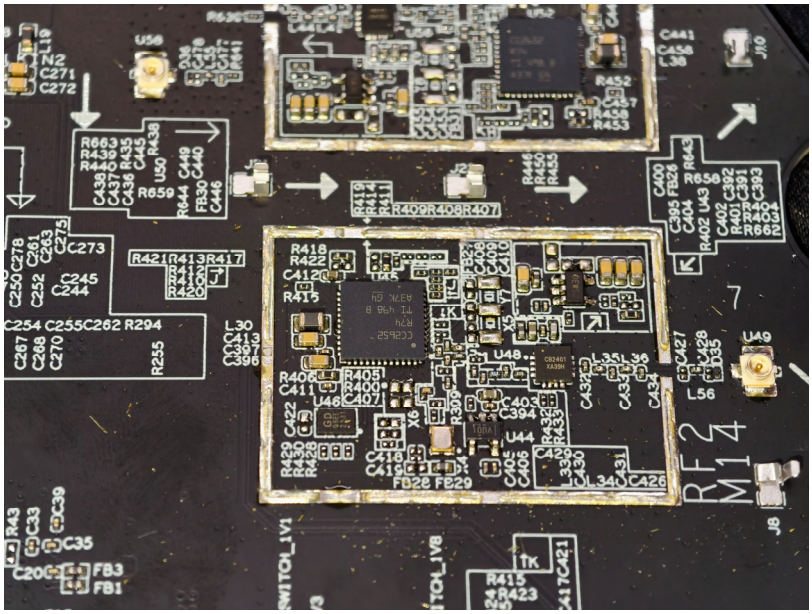
RF2
M14
U56
U52
U48
U46
U44
U49
J2
J8
J10
R659
R663
R452
R409 R408 R407
R421 R413 R417
C254 C255 C262 R294
C273
C245
C244
R255
R415
R423
C35
C20
FB3
FB1
FB22 FB29
SWITCH_1V1
SWITCH_1V8

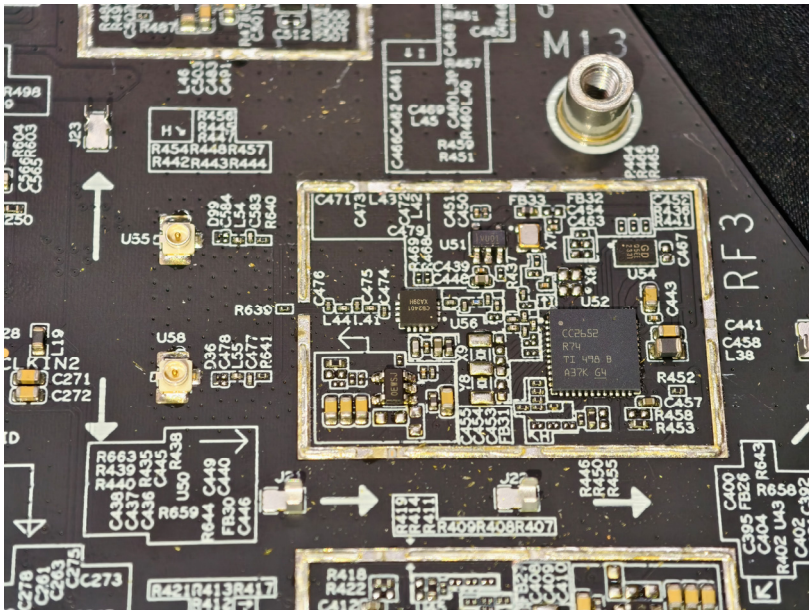
M13
RF3
U51
U52
U54
U55
U56
U58
J23
J21
J22
CC2652
R74
TI 498 B
A37K G4

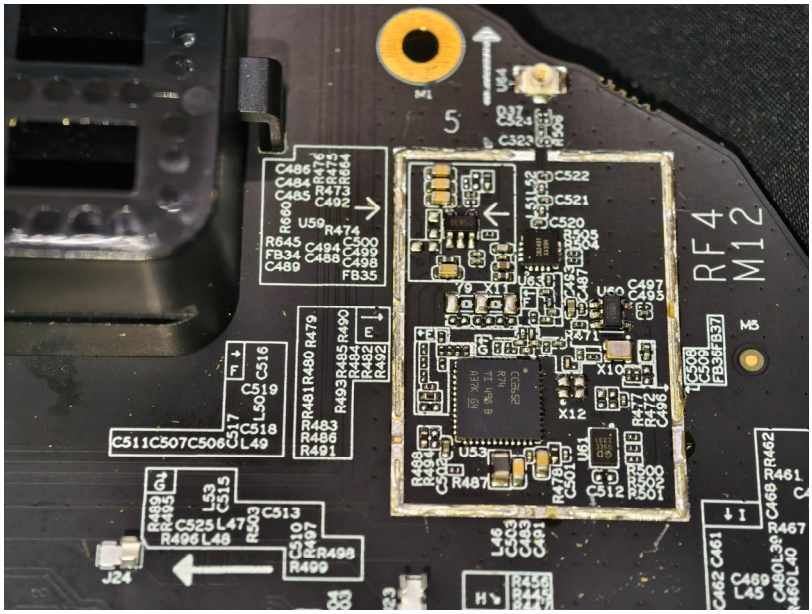
M1
5
RF4
M12
M3
U44
U59
U60
U61
U53
X10
X12
J24
CC2652
R74
TI 498 B
A37K G4

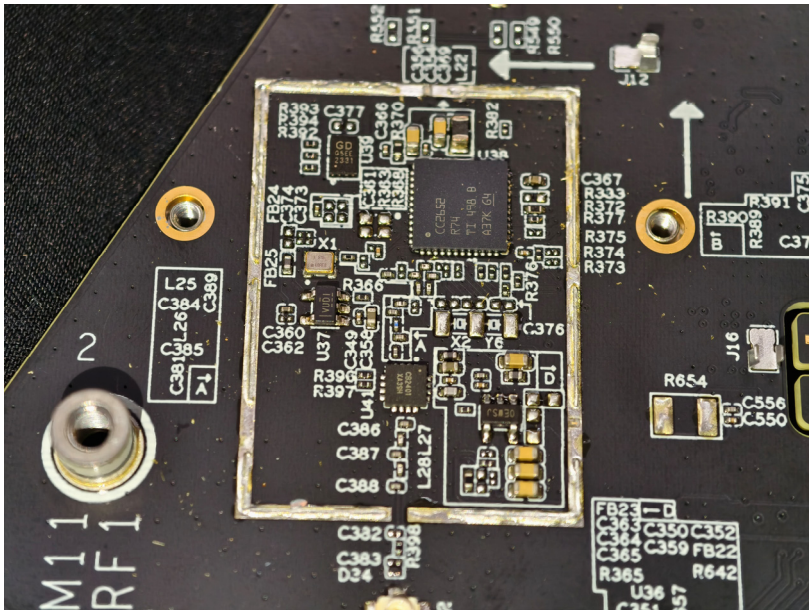
M11
RF1
2
L25
C384
C389
C385
C360
C362
U37
R396
R397
C386
C387
C388
C382
C383
D24
R398
X1
R366
C376
C367
R333
R372
R377
R375
R374
R373
R390
R389
J12
J16
R654
C556
C550
R365
R642
U36

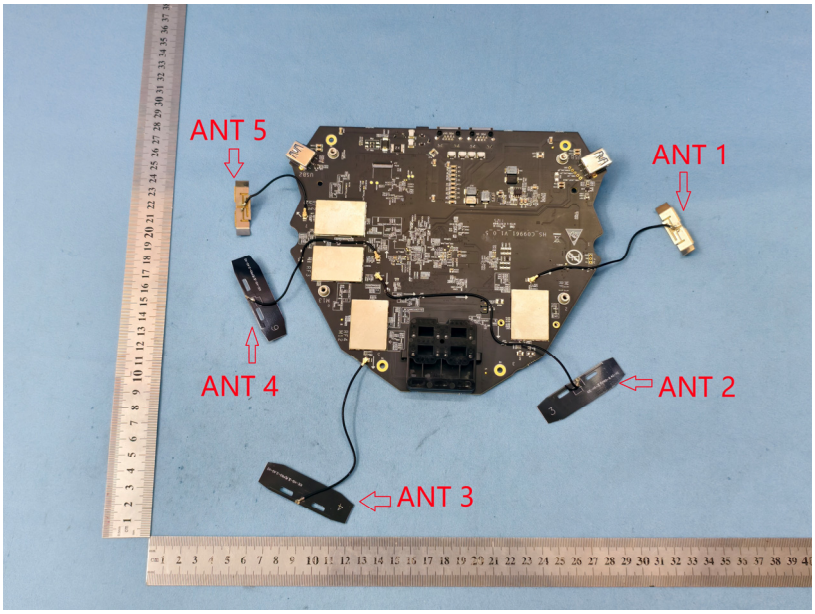
ANT 5
ANT 1
ANT 4
ANT 2
ANT 3