TEST REPORT

Product Name : Hanshow Megalink
Model Number : HS_C09970
FCC ID : 2AYMH-C09970

Prepared for : HANSHOW TECHNOLOGY CO., LTD.
Address : The 1st Floor Podium and Floor 4 of Building 1, Floor 7 of Building 5, Jiaxing Photovoltaic Technology Innovation Park, No.1288, Kanghe Road, Xiuzhou District, Jiaxing City, Zhejiang Prov,P.R.China

Prepared by : EMTEK (SHENZHEN) CO., LTD.
Address : Building 69, Majialong Industry Zone, Nanshan District, Shenzhen, Guangdong, China

Tel: (0755) 26954280
Fax: (0755) 26954282

Report Number : ENS2601140006W00903R
Date(s) of Tests : January 16, 2026 to February 13, 2026
Date of issue : February 25, 2026

Table of Contents

1 TEST RESULT CERTIFICATION 3

2 EUT TECHNICAL DESCRIPTION 5

3 SUMMARY OF TEST RESULT 6

4 TEST METHODOLOGY 7

4.1 GENERAL DESCRIPTION OF APPLIED STANDARDS 7
4.2 MEASUREMENT EQUIPMENT USED 7
4.3 DESCRIPTION OF TEST MODES 8

5 FACILITIES AND ACCREDITATIONS 9

5.1 FACILITIES 9

6 TEST SYSTEM UNCERTAINTY 10

7 SETUP OF EQUIPMENT UNDER TEST 11

7.1 RADIO FREQUENCY TEST SETUP 1 11
7.2 RADIO FREQUENCY TEST SETUP 2 11
7.3 CONDUCTED EMISSION TEST SETUP 13
7.4 SUPPORT EQUIPMENT 13

8 TEST REQUIREMENTS 14

8.1 BANDWIDTH TEST 14
8.2 RADIATED SPURIOUS EMISSION 17
8.3 CONDUCTED EMISSIONS TEST 29
8.4 ANTENNA APPLICATION 32

1 TEST RESULT CERTIFICATION

Applicant	:	HANSHOW TECHNOLOGY CO., LTD.
Address :		The 1st Floor Podium and Floor 4 of Building 1, Floor 7 of Building 5, Jiaxing Photovoltaic Technology Innovation Park, No.1288, Kanghe Road, Xiuzhou District, Jiaxing City, Zhejiang Prov,P.R.China
Manufacturer	:	HANSHOW TECHNOLOGY CO., LTD.
Address :		The 1st Floor Podium and Floor 4 of Building 1, Floor 7 of Building 5, Jiaxing Photovoltaic Technology Innovation Park, No.1288, Kanghe Road, Xiuzhou District, Jiaxing City, Zhejiang Prov,P.R.China
EUT	:	Hanshow Megalink
Model Name	:	HS_C09970
Trademark	:	Hanshow®

Measurement Procedure Used:

APPLICABLE STANDARDS	
STANDARD	**TEST RESULT**
FCC 47 CFR Part 2, Subpart J FCC 47 CFR Part 15, Subpart C	**PASS**

The above equipment was tested by EMTEK(SHENZHEN) CO., LTD. The test data, data evaluation, test procedures, and equipment configurations shown in this report were made in accordance with the procedures given in ANSI C63.10 (2020) and the energy emitted by the sample EUT tested as described in this report is in compliance with the requirements of FCC Rules Part 2 and Part 15.249

The test results of this report relate only to the tested sample identified in this report

Date of Test : January 16, 2026 to February 13, 2026

Prepared by : Yu Xiaolan/Editor

Reviewer : Xia lilu/Supervisor

Approve & Authorized Signer : Wang Li/Manager

EMTEK (SHENZHEN) CO., LTD. TESTING

Modified Information

Version	Report No.	Revision Date	Summary
Ver1.0	ENS2601140006W00903R	/	Original Report

2 EUT TECHNICAL DESCRIPTION

Product:	Hanshow Megalink
Model Number:	HS_C09970
Power Supply	DC 12V
Modulation:	GFSK
Frequency Range:	2402 MHz to 2480 MHz
Number of Channels:	157 Channel
Max Transmit Power:	104.53 dBuV/m
Antenna Gain:	4.25 dBi
Antenna:	Steel Antenna
Temperature Range:	-10˚C~50˚C

Note: for more details, please refer to the User's manual of the EUT.

3 SUMMARY OF TEST RESULT

FCC Part Clause	Test Parameter	Verdict	Remark
15.207	Conducted Emission	PASS	
15.209	Radiated Emission	PASS	
15.249	Radiated Spurious Emission	PASS	
15.249	Band edge test	PASS	
15.249	20dB Bandwidth	PASS	
15.203	Antenna Requirement	PASS	
NOTE1: N/A (Not Applicable) NOTE2: The report use radiated measurements in the restricted frequency bands. In addition, the radiated test is also performed to ensure the emissions emanating from the device cabinet also comply with the applicable limits.			

RELATED SUBMITTAL(S) / GRANT(S):

This submittal(s) (test report) is intended for FCC ID: 2AYMH-C09970 filing to comply with Section 15.249 of the FCC Part 15, Subpart C Rules.

4 TEST METHODOLOGY

4.1 GENERAL DESCRIPTION OF APPLIED STANDARDS

According to its specifications, the EUT must comply with the requirements of the following standards:
FCC 47 CFR Part 2, Subpart J
FCC 47 CFR Part 15, Subpart C

4.2 MEASUREMENT EQUIPMENT USED

4.2.1 Conducted Emission Test Equipment

EQUIPMENT TYPE	MFR	MODEL NUMBER	SERIAL NUMBER	LASTCAL.	CAL. INTERVAL
EMI Test Receiver	Rohde & Schwarz	ESCI	101384	2025/5/9	1Year
AMN	Rohde & Schwarz	ENV216	101161	2025/5/9	1Year
AMN	Kyoritsu	KNW-407	8-1492-9	2025/5/10	1Year
Pulse Limiter	Schwarzbeck	VTSD 9561 F-B	00955	2025/5/9	1Year
I.S.N	Teseq GmbH	ISN T800	30327	2025/10/16	1Year

4.2.2 Radiated Emission Test Equipment

EQUIPMENT TYPE	MFR	MODEL NUMBER	SERIAL NUMBER	LAST CAL.	CAL. INTERVAL
EMI Test Receiver	Rohde & Schwarz	ESU26	100154	2025/5/9	1Year
Pre-Amplifier	HP	8447F	2944A07999	2025/5/9	1Year
Bilog Antenna	Schwarzbeck	VULB9163	141	2024/6/15	2 Year
Loop Antenna	Schwarzbeck	FMZB1519	1519-012	2025/5/13	2Year
Horn Antenna	Schwarzbeck	BBHA9170	9170-399	2025/5/13	2Year
Horn Antenna	Schwarzbeck	BBHA9120D	9120D-1177	2025/5/17	2 Year
Cable	Schwarzbeck	AK9513	ACRX1	2025/5/9	1Year
Cable	Rosenberger	N/A	FP2RX2	2025/5/9	1Year
Cable	Schwarzbeck	AK9513	CRPX1	2025/5/9	1Year
Cable	Schwarzbeck	AK9513	CRRX2	2025/5/9	1Year

4.2.3 Radio Frequency Test Equipment

EQUIPMENT TYPE	MFR	MODEL NUMBER	SERIAL NUMBER	LASTCAL.	CAL. INTERVAL
Spectrum Analyzer	Rohde & Schwarz	FSV3044	101290	2025/10/16	1Year
EMI Test Receiver	Rohde & Schwarz	ESCI	101045	2025/5/9	1Year
Signal Analyzer	Agilent	N9010A	MY53470879	2025/5/10	1Year
RF Control Unit(Power Meter)	Tonscend	JS0806-2	\	2025/5/10	1Year
50ohm Diode Power Sensor	BOONTON	51011EMC	36164	2025/5/9	1 Year

Remark: *Each piece of equipment is scheduled for calibration once a year.*

4.3 DESCRIPTION OF TEST MODES

The EUT has been tested under its typical operating condition.
The EUT configuration for testing is installed on RF field strength measurement to meet the Commissions requirement and operating in a manner which intends to maximize its emission characteristics in a continuous normal application.
The Transmitter was operated in the normal operating mode. The TX frequency was fixed which was for the purpose of the measurements.

Test of channel included the lowest and middle and highest frequency to perform the test, then record on this report.

The EUT has been tested under its typical operating condition so those modulation and channel were used for all test.

Pre-defined engineering program for regulatory testing used to control the EUT for staying in continuous transmitting and receiving mode is programmed.

Frequency and Channel list:

Channel	Frequency (MHz)	Channel	Frequency (MHz)	Channel	Frequency (MHz)
4	2402	82	2441	…	…
5	2402.5	83	2441.5	158	2479
6	2403	84	2442	159	2479.5
…	…	…	…	160	2480
Note: fc=2402MHz+(k-1)×0.5MHz k=1 to 157					

Test Frequency and channel list:

Lowest Frequency		Middle Frequency		Highest Frequency	
Channel	Frequency (MHz)	Channel	Frequency (MHz)	Channel	Frequency (MHz)
4	2402	82	2441	160	2480

5 FACILITIES AND ACCREDITATIONS

5.1 FACILITIES

All measurement facilities used to collect the measurement data are located at

Bldg 69, Majialong Industry Zone District, Nanshan District, Shenzhen, China
The sites are constructed in conformance with the requirements of ANSI C63.7, ANSI C63.10 and CISPR Publication 22.

5.2 LABORATORY ACCREDITATIONS AND LISTINGS

Site Description		
EMC Lab.	:	**Accredited by CNAS** The Certificate Registration Number is L2291. The Laboratory has been assessed and proved to be in compliance with CNAS-CL01 (identical to ISO/IEC 17025:2017) **Accredited by FCC** Designation Number: CN1204 Test Firm Registration Number: 882943 **Accredited by A2LA** The Certificate Number is 4321.01. Accredited by Industry Canada The Conformity Assessment Body Identifier is CN0008
Name of Firm	:	EMTEK (SHENZHEN) CO., LTD.
Site Location	:	Building 69, Majialong Industry Zone, Nanshan District, Shenzhen, Guangdong, China

6 TEST SYSTEM UNCERTAINTY

The following measurement uncertainty levels have been estimated for tests performed on the apparatus:

Parameter	Uncertainty
Radio Frequency	±1x10^-5
Maximum Peak Output Power Test	±1.0dB
Conducted Emissions Test	±2.0dB
Radiated Emission Test	±2.0dB
Occupied Bandwidth Test	±1.0dB
Band Edge Test	±3dB
All emission, radiated	±3dB
Antenna Port Emission	±3dB
Temperature	±0.5℃
Humidity	±3%

Measurement Uncertainty for a level of Confidence of 95%

7 SETUP OF EQUIPMENT UNDER TEST

7.1 RADIO FREQUENCY TEST SETUP 1

The EUT wireless component's antenna ports(s) of the EUT are connected to the measurement instrument per an appropriate attenuator. The EUT is controlled by PC/software to emit the specified signals for the purpose of measurements.

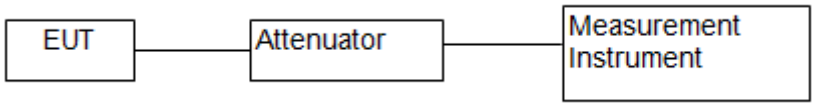

7.2 RADIO FREQUENCY TEST SETUP 2

The test site semi-anechoic chamber has met the requirement of NSA tolerance 4 dB according to the standards: ANSI C63.10. The test distance is 3m.The setup is according to the requirements in Section 13.1.4.1 of ANSI C63.10-2020
and CAN/CSA-CEI/IEC CISPR 22.

Below 30MHz：

The EUT is placed on a turntable 0.8 meters above the ground in the chamber, 3 meter away from the antenna (loop antenna). The Antenna should be positioned with its plane vertical at the specified distance from the EUT and rotated about its vertical axis for maximum response at each azimuth about the EUT. The center of the loop shall be 1 m above the ground. For certain applications, the loop antenna plane may also need to be positioned horizontally at the specified distance from the EUT.

30MHz-1GHz：

The EUT is placed on a turntable 0.8 meters above the ground in the chamber, 3 meter away from the antenna. The maximal emission value is acquired by adjusting the antenna height, polarisation and turntable azimuth. Normally, the height range of antenna is 1 m to 4 m, the azimuth range of turntable is 0° to 360°, and the receive antenna has two polarizations Vertical (V) and Horizontal (H).

Above 1GHz：

The EUT is placed on a turntable 1.5 meters above the ground in the chamber, 3 meter away from the antenna. The maximal emission value is acquired by adjusting the antenna height, polarisation and turntable azimuth. Normally, the height range of antenna is 1 m to 4 m, the azimuth range of turntable is 0° to 360°, and the receive antenna has two polarizations Vertical (V) and Horizontal (H).

(a) Radiated Emission Test Set-Up, Frequency Below 30MHz

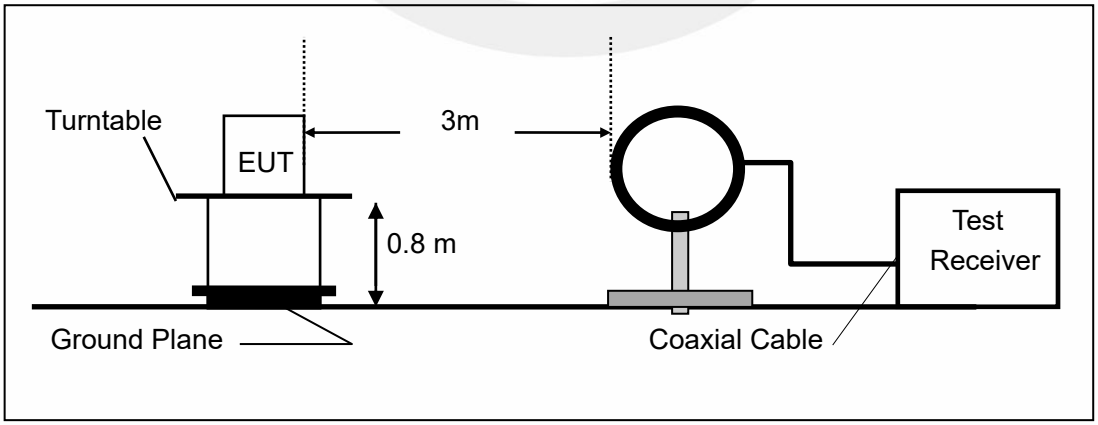

(b) Radiated Emission Test Set-Up, Frequency Below 1000MHz

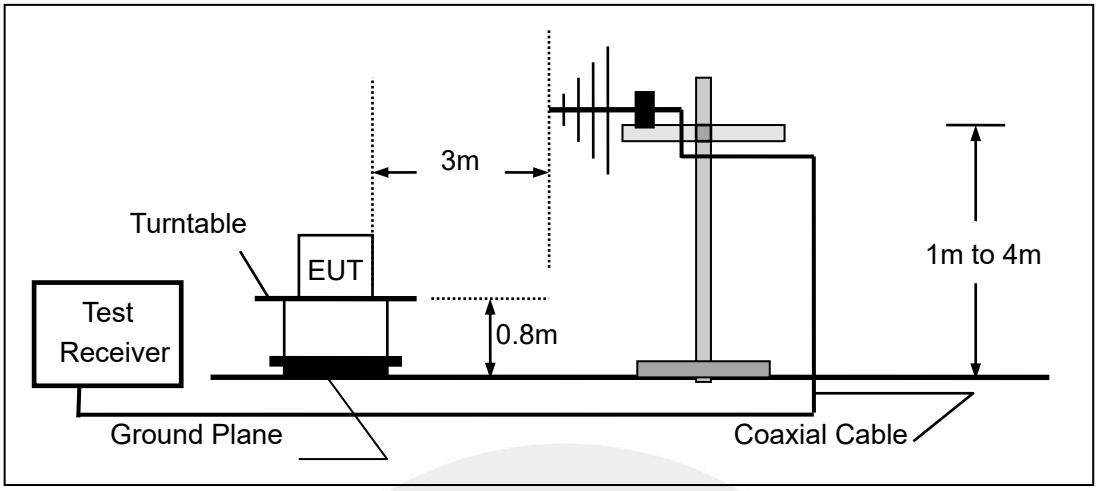

(c) Radiated Emission Test Set-Up, Frequency above 1000MHz

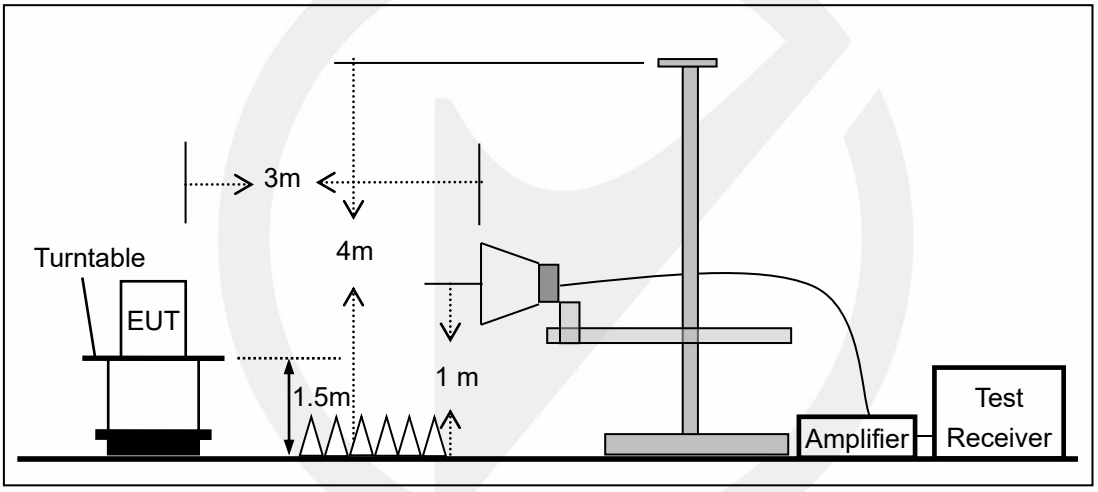

7.3 CONDUCTED EMISSION TEST SETUP

The mains cable of the EUT (maybe per AC/DC Adapter) must be connected to LISN. The LISN shall be placed 0.8 m from the boundary of EUT and bonded to a ground reference plane for LISN mounted on top of the ground reference plane. This distance is between the closest points of the LISN and the EUT. All other units of the EUT and associated equipment shall be at least 0.8m from the LISN.

Ground connections, where required for safety purposes, shall be connected to the reference ground point of the LISN and, where not otherwise provided or specified by the manufacturer, shall be of same length as the mains cable and run parallel to the mains connection at a separation distance of not more than 0.1 m.

According to the requirements in Section 13.1.4.1 of ANSI C63.10-2020 Conducted emissions from the EUT measured in the frequency range between 0.15 MHz and 30 MHz using CISPR Quasi-Peak and average detector mode.

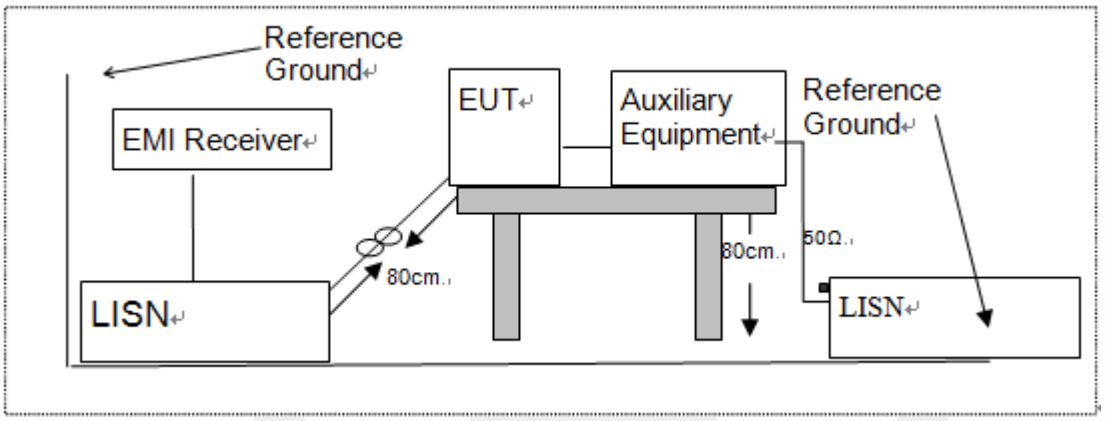

7.4 SUPPORT EQUIPMENT

EUT Cable List and Details			
Cable Description	Length (m)	Shielded/Unshielded	With / Without Ferrite

Auxiliary Cable List and Details			
Cable Description	Length (m)	Shielded/Unshielded	With / Without Ferrite
/	/	/	/

Auxiliary Equipment List and Details			
Description	Manufacturer	Model	Serial Number

Notes:

1. *All the equipment/cables were placed in the worst-case configuration to maximize the emission during the test.*
2. *Grounding was established in accordance with the manufacturer's requirements and conditions for the intended use.*

8 TEST REQUIREMENTS

8.1 BANDWIDTH TEST

8.1.1 Applicable Standard

According to FCC Part 15.249

8.1.2 Conformance Limit

N/A

8.1.3 Test Configuration

Test according to clause 7.1 radio frequency test setup 1

8.1.4 Test Procedure

The EUT was operating in controlled its channel. Printed out the test result from the spectrum by hard copy function.
The RF output of EUT was connected to the spectrum analyzer by RF cable and attenuator. The path loss was compensated to the results for each measurement.
Set to the maximum power setting and enable the EUT transmit continuously
Set RBW ≥ 1% of the 20 dB bandwidth(3KHz)
Set the video bandwidth (VBW) ≥ RBW(10KHz).
Set Span= approximately 2 to 3 times the 20 dB bandwidth
Set Detector = Peak.
Set Trace mode = max hold.
Set Sweep = auto couple.
Measure the maximum width of the emission that is constrained by the frequencies associated with the two outermost amplitude points (upper and lower frequencies) that are attenuated by 20 dB relative to the maximum level measured in the fundamental emission.
Measure and record the results in the test report.

Test Results

Temperature:	26° C
Relative Humidity:	54%
ATM Pressure:	1011 mbar

Operation Mode	Channel Number	Channel Frequency (MHz)	20db Measurement Bandwidth (MHz)	99% Measurement Bandwidth (MHz)	Limit (kHz)	Verdict
GFSK	4	2402	1.1027	0.9465	N/A	PASS
	82	2441	1.1158	0.9812	N/A	PASS
	160	2480	1.1201	0.9638	N/A	PASS
Note: N/A (Not Applicable)						

Test Model	Occupied Bandwidth GFSK Channel 4: 2402MHz

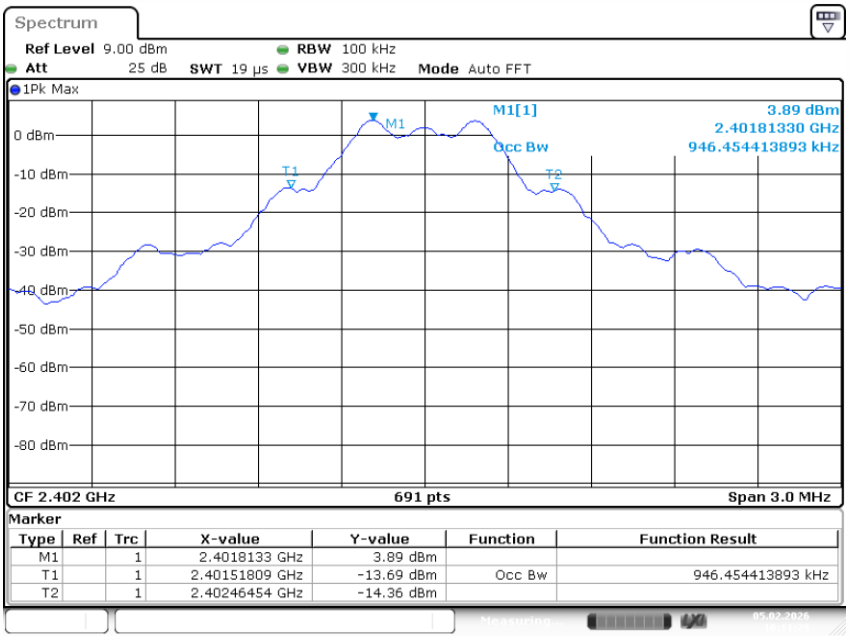

Date: 5.FEB.2026 10:11:29

Test Model	Occupied Bandwidth GFSK Channel 82: 2441MHz

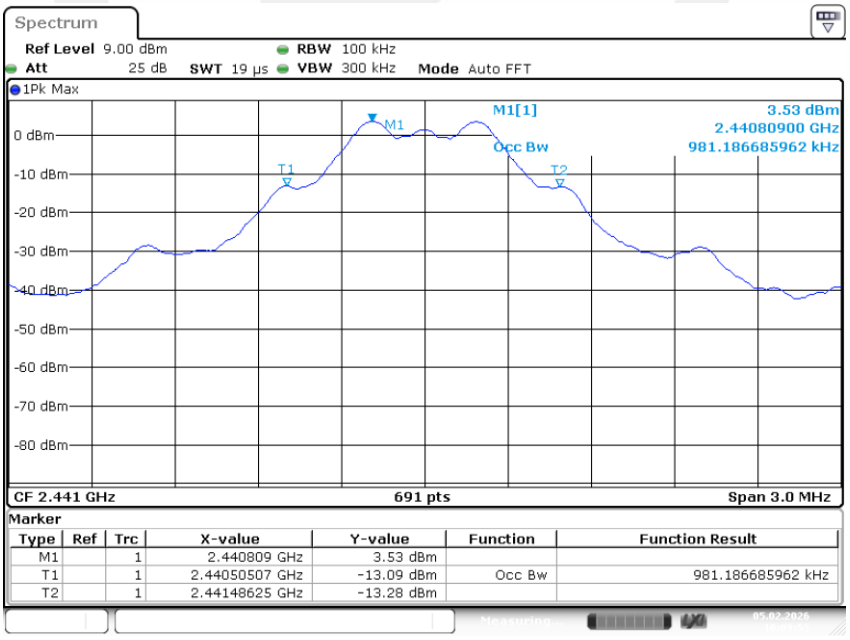

Date: 5.FEB.2026 10:09:56

Test Model	Occupied Bandwidth GFSK Channel 160: 2480MHz

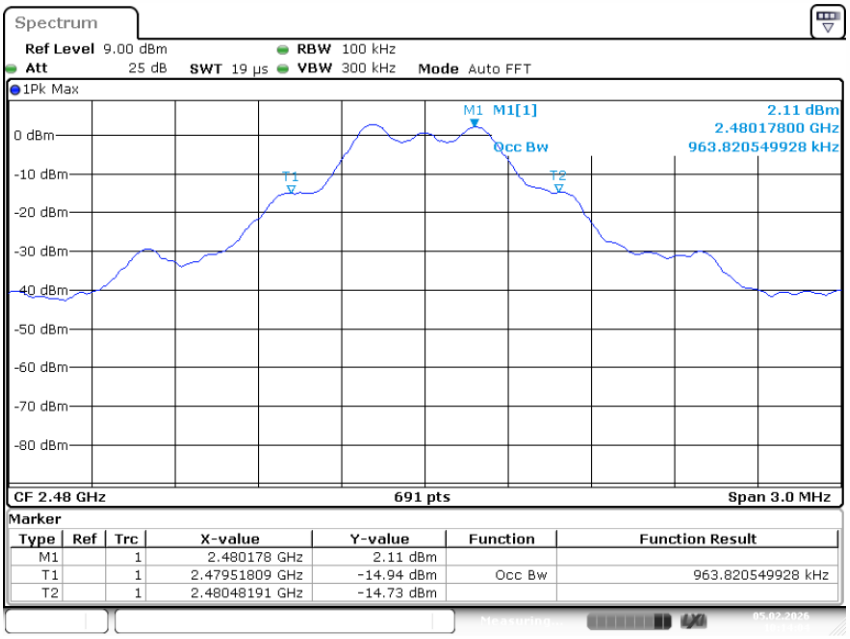

Date: 5.FEB.2026 10:14:04

8.2 RADIATED SPURIOUS EMISSION

8.2.1 Applicable Standard

According to FCC Part 15.249 and 15.209

8.2.2 Conformance Limit

According to FCC Part 15.249: radiated emissions which fall in the restricted bands, as defined in §15.205(a), must also comply with the radiated emission limits specified in §15.209(a) (see §15.205(c)).
According to FCC Part15.205, Restricted bands

MHz	MHz	MHz	GHz
0.090-0.110	16.42-16.423	399.9-410	4.5-5.15
10.495-0.505	16.69475-16.69525	608-614	5.35-5.46
2.1735-2.1905	16.80425-16.80475	960-1240	7.25-7.75
4.125-4.128	25.5-25.67	1300-1427	8.025-8.5
4.17725-4.17775	37.5-38.25	1435-1626.5	9.0-9.2
4.20725-4.20775	73-74.6	1645.5-1646.5	9.3-9.5
6.215-6.218	74.8-75.2	1660-1710	10.6-12.7
6.26775-6.26825	123-138	2200-2300	14.47-14.5
8.291-8.294	149.9-150.05	2310-2390	15.35-16.2
8.362-8.366	156.52475-156.52525	2483.5-2500	17.7-21.4
8.37625-8.38675	156.7-156.9	2690-2900	22.01-23.12
8.41425-8.41475	162.0125-167.17	3260-3267	23.6-24.0
12.29-12.293	167.72-173.2	3332-3339	31.2-31.8
12.51975-12.52025	240-285	3345.8-3358	36.43-36.5
12.57675-12.57725	322-335.4	3600-4400	(2)
13.36-13.41			

According to FCC Part15.205, the level of any transmitter spurious emission in Restricted bands shall not exceed the level of the emission specified in the following table

Restricted Frequency(MHz)	Field Strength (μV/m)	Field Strength (dBμV/m)	Measurement Distance
0.009-0.490	2400/F(KHz)	20 log (uV/m)	300
0.490-1.705	2400/F(KHz)	20 log (uV/m)	30
1.705-30	30	29.5	30
30-88	100	40	3
88-216	150	43.5	3
216-960	200	46	3
Above 960	500	54	3

Remark :1. Emission level in dBuV/m=20 log (uV/m)
2. Measurement was performed at an antenna to the closed point of EUT distance of meters.
3. Distance extrapolation factor =40log(Specific distance/ test distance)(dB);
Limit line=Specific limits(dBuV) + distance extrapolation factor.
for the frequency ranges below 30 MHz, a narrower RBW is used for these ranges but the measured value should add a RBW correction factor (RBWCF) where RBWCF [dB] =10*lg(100 [kHz]/narrower RBW [kHz]). , the narrower RBW is 1 kHz and RBWCF is 20 dB for the frequency 9 kHz to 150 kHz, and the narrower RBW is 10 kHz and RBWCF is 10 dB for the frequency 150 kHz to 30 MHz.

Field strength of fundamental and Field strength of harmonics Limit:

Fundamental frequency	Field strength of fundamental (millivolts/meter)	Field strength of harmonics (microvolts/meter)
902-928 MHz	50(94 dBV/m)	500(54 dBV/m)
2400-2483.5 MHz	50(94 dBV/m)	500(54 dBV/m)
5725-5875 MHz	50(94 dBV/m)	500(54 dBV/m)
24.0-24.25 GHz	250(108 dBV/m)	2500(68 dBV/m)

As shown in §15.35(b), for frequencies above 1000 MHz, the field strength limits in paragraphs (a) and (b) of this section are based on average limits. However, the peak field strength of any emission shall not exceed the maximum permitted average limits specified above by more than 20 dB under any condition of modulation

For this report

Fundamental Frequency	Field Strength Of Fundamental	Field Strength of Spurious Emissions
2400-2483.5 MHz	AV:94 dBuV/m at 3m distance	AV:54 dBuV/m at 3m distance
	PK:114 dBuV/m at 3m distance	PK:74 dBuV/m at 3m distance

8.2.3 Test Configuration

Test according to clause 7.2 radio frequency test setup 2

8.2.4 Test Procedure

This test is required for any spurious emission that falls in a Restricted Band, as defined in Section 15.205. It must be performed with the highest gain of each type of antenna proposed for use with the EUT. Use the following spectrum analyzer settings:
The EUT was placed on a turn table which is 0.8m above ground plane.
Maximum procedure was performed on the highest emissions to ensure EUT compliance.
Span = wide enough to fully capture the emission being measured
RBW = 1 MHz for f ≥ 1 GHz(1GHz to 25GHz), 100 kHz for f < 1 GHz(30MHz to 1GHz)
VBW ≥ RBW
Sweep = auto
Detector function = peak
Trace = max hold
Follow the guidelines in ANSI C63.10-2020 with respect to maximizing the emission by rotating the EUT, measuring the emission while the EUT is situated in three orthogonal planes (if appropriate), adjusting the measurement antenna height and polarization, etc. A pre-amp and a high pass filter are required for this test, in order to provide the measuring system with sufficient sensitivity. Allow the trace to stabilize. The peak reading of the emission, after being corrected by the antenna factor, cable loss, pre-amp gain, etc., is the peak field strength, which must comply with the limit specified in Section 15.35(b). Submit this data.
Now set the VBW to 10 Hz, while maintaining all of the other instrument settings. This peak level, once corrected, must comply with the limit specified in Section 15.209. If the dwell time per channel of the hopping signal is less than 100 ms, then the reading obtained with the 10 Hz VBW may be further adjusted by a “duty cycle correction factor”, derived from 20log(dwell time/100 ms), in an effort to demonstrate compliance with the 15.209 limit. Submit this data.
Repeat above procedures until all frequency measured was complete.

8.2.5 Test Results

Temperature:	24° C
Relative Humidity:	53%
ATM Pressure:	1011 mbar

■ Spurious Emission below 30MHz (9KHz to 30MHz)

Freq. (MHz)	Ant.Pol. H/V	Emission Level(dBuV/m)		Limit 3m(dBuV/m)		Over(dB)	
		PK	AV	PK	AV	PK	AV
--	--	--	--	--	--	--	--

Note: the amplitude of spurious emission that is attenuated by more than 20dB below the permissible limit has no need to be reported.
Distance extrapolation factor =40log(Specific distance/ test distance)(dB);
Limit line=Specific limits(dBuV) + distance extrapolation factor

■ Field Strength of the fundamental signal

Freq. (MHz)	Ant.Pol. H/V	Emission Level(dBuV/m)		Limit 3m(dBuV/m)		Over(dB)	
		PK	AV	PK	AV	PK	AV
2402.19	V	87.16	67.99	114	94	26.84	26.01
2401.74	H	97.90	78.70	114	94	16.10	15.30
2440.68	V	93.74	74.57	114	94	20.26	19.43
2441.13	H	104.53	85.36	114	94	9.47	8.64
2479.77	V	89.15	69.98	114	94	24.85	24.02
2479.77	H	101.09	81.92	114	94	12.91	12.08

Note: (1) Correct Factor= Antenna Factor +Cable Loss- Amplifier Gain
(2) Emission Level= Reading Level+Probe Factor +Cable Loss

■ Out of Band Emissions

Test mode: GFSK Frequency: Channel 4: 2402MHz

Frequency (MHz)	Polarity	PK(dBuV/m) (VBW=3MHz)	Limit 3m (dBuV/m)	Over(dB)	AV(dBuV/m) (VBW=10Hz)	Limit 3m (dBuV/m)	Over(dB)
2400	H	66.60	74.00	7.40	42.64	54.00	11.36
2400	V	55.75	74.00	18.25	40.57	54.00	13.43

Test mode: GFSK Frequency: Channel 160: 2480MHz

Frequency (MHz)	Polarity	PK(dBuV/m) (VBW=3MHz)	Limit 3m (dBuV/m)	Over(dB)	AV(dBuV/m) (VBW=10Hz)	Limit 3m (dBuV/m)	Over(dB)
2483.93	H	53.46	74.00	20.54	40.65	54.00	13.35
2483.52	V	50.50	74.00	23.50	39.60	54.00	14.40

Note: (1) All Readings are Peak Value (VBW=3MHz) and Peak Value (VBW=10Hz).
(2) Emission Level= Reading Level+Correct Factor +Cable Loss.
(3) Correct Factor= Ant_F + Cab_L - Preamp
(4)Data of measurement within this frequency range shown " -- " in the table above means the reading of emissions are attenuated more than 20dB below the permissible limits or the field strength is too small to be measured.

Test Model	Band Emissions Low Test By: CZF	GFSK	V

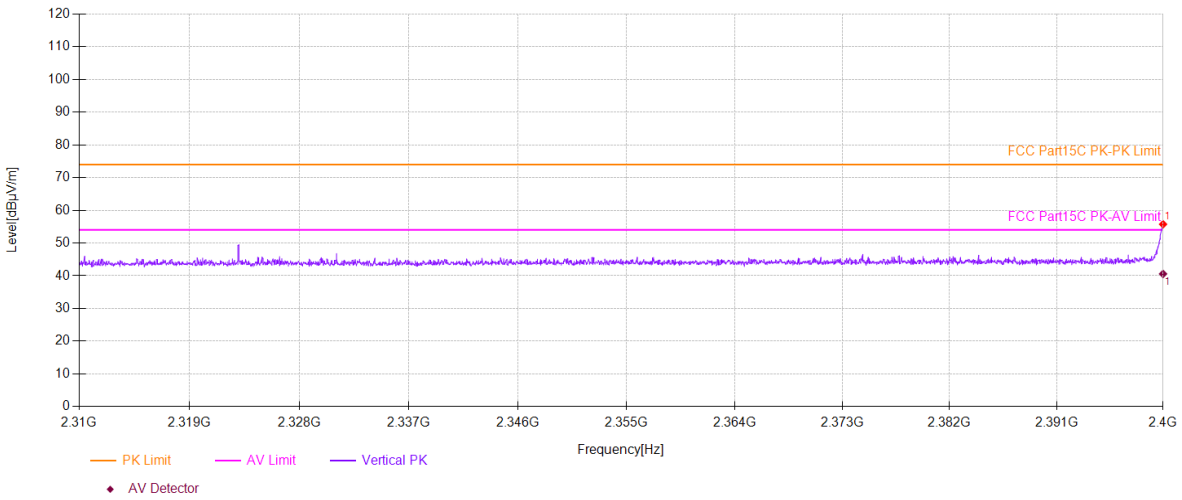

Test Model	Band Emissions Low Test By: CZF	GFSK	H

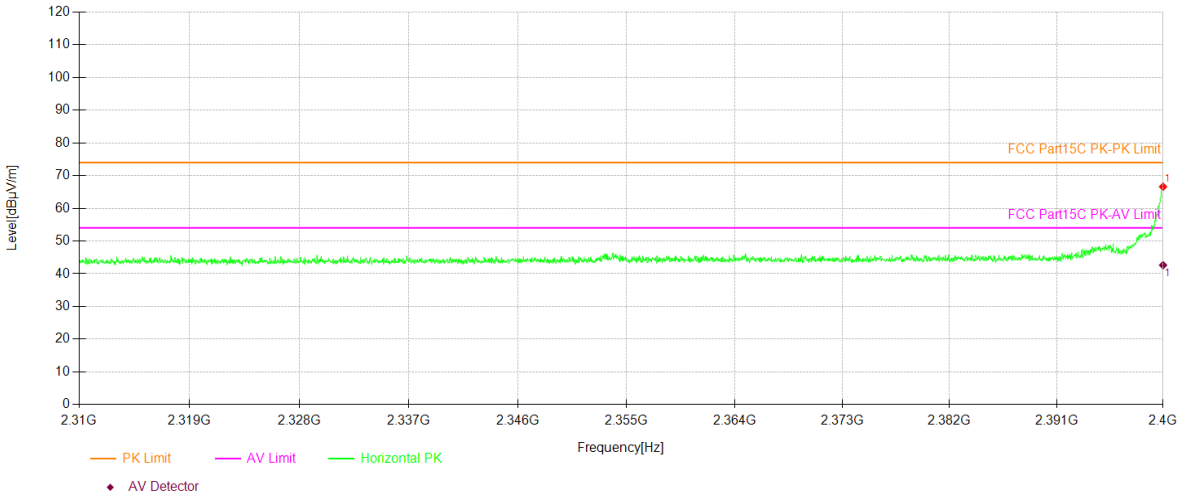

Test Model	Band Emissions High Test By: CZF	GFSK	V

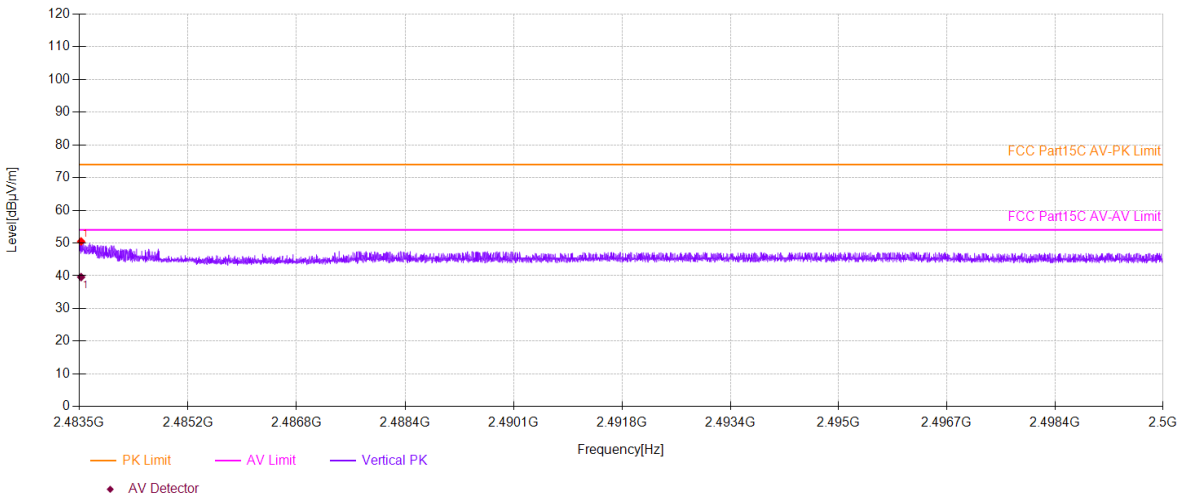

Test Model	Band Emissions High Test By: CZF	GFSK	H

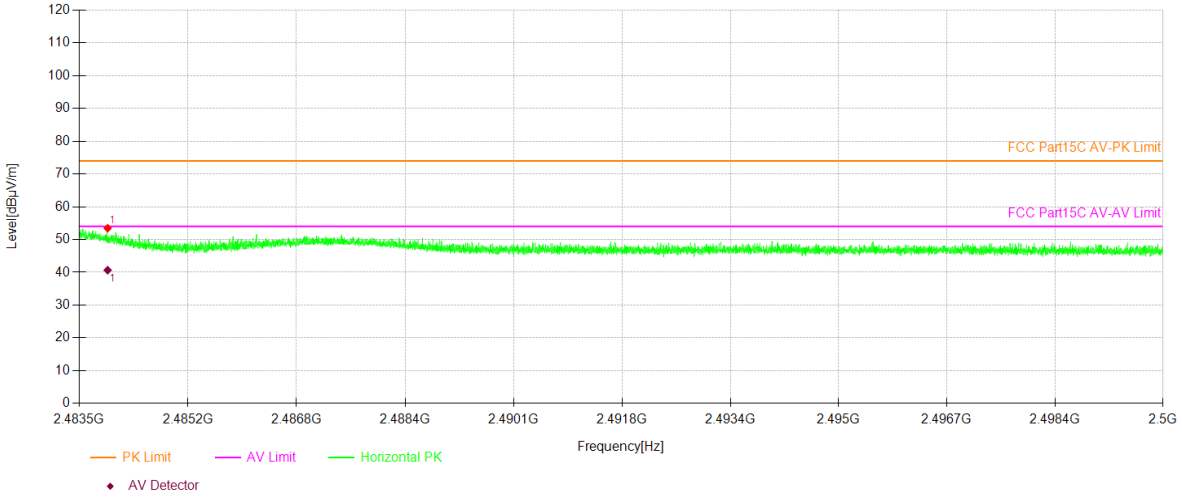

■ Spurious Emission Above 1GHz (1GHz to 25GHz)

Test mode: GFSK Frequency: Channel 4: 2402MHz

Freq. (MHz)	Ant.Pol. H/V	Emission Level(dBuV/m)			Limit 3m(dBuV/m)		Over(dB)	
		PK	Factor(dB)	AV	PK	AV	PK	AV
4706.25	V	49.82	-17.41	32.41	74	54	24.18	21.59
8371.87	V	59.17	-21.12	38.05	74	54	14.83	15.95
16453.1	V	66.57	-18.97	47.60	74	54	7.43	6.40
4995	H	50.22	-18.06	32.16	74	54	23.78	21.84
8446.87	H	59.06	-20.19	38.87	74	54	14.94	15.13
16415.6	H	67.04	-18.86	48.18	74	54	6.96	5.82

Test mode: GFSK Frequency: Channel 82: 2441MHz

Freq. (MHz)	Ant.Pol. H/V	Emission Level(dBuV/m)			Limit 3m(dBuV/m)		Over(dB)	
		PK	Factor(dB)	AV	PK	AV	PK	AV
4668.75	V	49.86	-17.81	32.05	74	54	24.14	21.95
8426.25	V	59.15	-20.4	38.75	74	54	14.85	15.25
16923.7	V	66.22	-17.97	48.25	74	54	7.78	5.75
4663.12	H	50.12	-18.6	31.52	74	54	23.88	22.48
8366.25	H	58.81	-20.26	38.55	74	54	15.19	15.45
17683.1	H	67.16	-18.6	48.56	74	54	6.84	5.44

Test mode: GFSK Frequency: Channel 160: 2480MHz

Freq. (MHz)	Ant.Pol. H/V	Emission Level(dBuV/m)			Limit 3m(dBuV/m)		Over(dB)	
		PK	Factor(dB)	AV	PK	AV	PK	AV
4708.12	V	50.20	-17.81	32.39	74	54	23.80	21.61
8401.87	V	59.25	-20.58	38.67	74	54	14.75	15.33
17904.3	V	67.36	-20.1	47.26	74	54	6.64	6.74
5169.37	H	49.73	-17.69	32.04	74	54	24.27	21.96
8437.5	H	59.53	-20.59	38.94	74	54	14.47	15.06
16464.3	H	67.88	-20.42	47.46	74	54	6.12	6.54

Note: (1) All Readings are Peak Value (VBW=3MHz) and Peak Value (VBW=10Hz).
(2) Emission Level= Reading Level+Correct Factor +Cable Loss.
(3) Correct Factor= Ant_F + Cab_L - Preamp
(4)Data of measurement within this frequency range shown " -- " in the table above means the reading of emissions are attenuated more than 20dB below the permissible limits or the field strength is too small to be measured.
(5)Averaging factor in dB=20log (duty cycle)
20log (Duty cycle) =20log (0.31/3.61ms)=-21.32dB

■ Spurious Emission below 1GHz (30MHz to 1GHz)

All modes have been tested, and the worst result recorded was report as below:

Mode:	SRD 2402	Voltage:	DC 12V

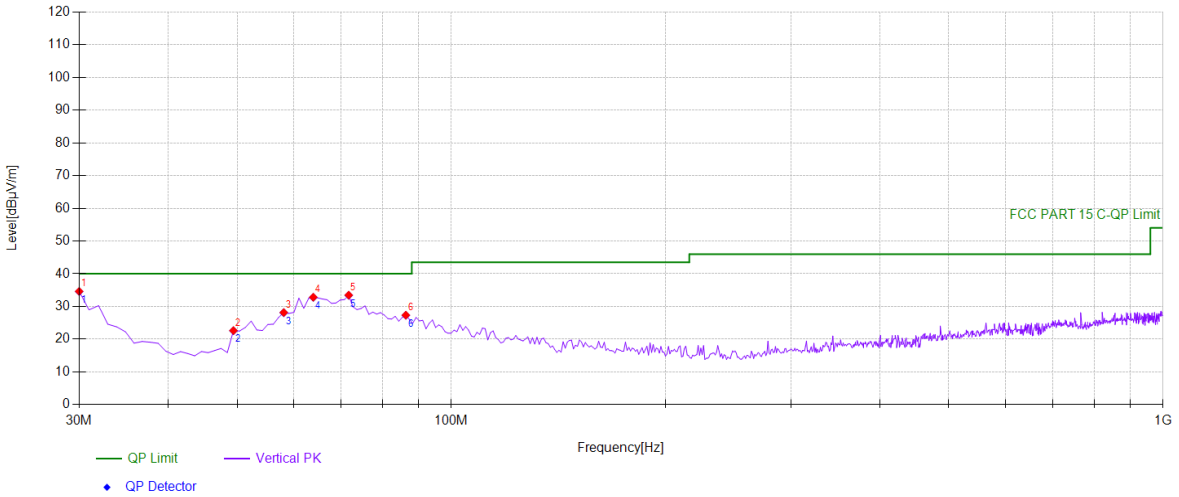

Suspected Data List								
NO.	Freq. [MHz]	Reading [dBµV]	Factor [dB/m]	Level [dBµV/m]	Detector	Limit [dBµV/m]	Margin [dB]	Polarity
1	30	53.43	-18.80	34.63	PK	40.00	5.37	Vertical
2	49.4194	38.74	-16.10	22.64	PK	40.00	17.36	Vertical
3	58.1582	45.30	-17.14	28.16	PK	40.00	11.84	Vertical
4	63.984	50.78	-17.94	32.84	PK	40.00	7.16	Vertical
5	71.7518	52.50	-19.03	33.47	PK	40.00	6.53	Vertical
6	86.3163	46.68	-19.32	27.36	PK	40.00	12.64	Vertical

Final Data List					
NO.	Freq. [MHz]	Factor [dB/m]	QP Value [dBµV/m]	QP Limit [dBµV/m]	QP Margin [dB]
1	30	-18.80	34.58	40.00	5.42
2	49.4194	-16.10	22.59	40.00	17.41
3	58.1582	-17.14	28.11	40.00	11.89
4	63.984	-17.94	32.79	40.00	7.21
5	71.7518	-19.03	33.42	40.00	6.58
6	86.3163	-19.32	27.31	40.00	12.69

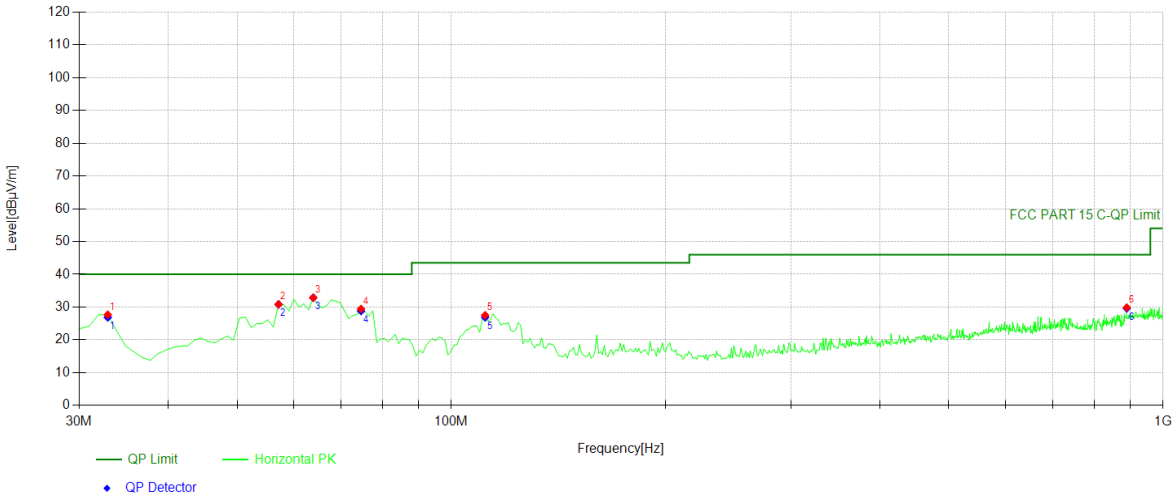

Suspected Data List								
NO.	Freq. [MHz]	Reading [dBµV]	Factor [dB/m]	Level [dBµV/m]	Detector	Limit [dBµV/m]	Margin [dB]	Polarity
1	32.9129	46.10	-18.41	27.69	PK	40.00	12.31	Horizontal
2	57.1872	47.83	-17.00	30.83	PK	40.00	9.17	Horizontal
3	63.984	50.82	-17.94	32.88	PK	40.00	7.12	Horizontal
4	74.6647	48.92	-19.48	29.44	PK	40.00	10.56	Horizontal
5	111.561	45.50	-17.98	27.52	PK	43.50	15.98	Horizontal
6	889.309	33.02	-3.14	29.88	PK	46.00	16.12	Horizontal

Final Data List					
NO.	Freq. [MHz]	Factor [dB/m]	QP Value [dBµV/m]	QP Limit [dBµV/m]	QP Margin [dB]
1	32.9129	-18.41	26.86	40.00	13.14
2	57.1872	-17.00	30.83	40.00	9.17
3	63.984	-17.94	32.88	40.00	7.12
4	74.6647	-19.48	28.80	40.00	11.20
5	111.5616	-17.98	26.88	43.50	16.62
6	889.3093	-3.14	29.60	46.00	16.40

Mode:	SRD 2441	Voltage:	DC 12V

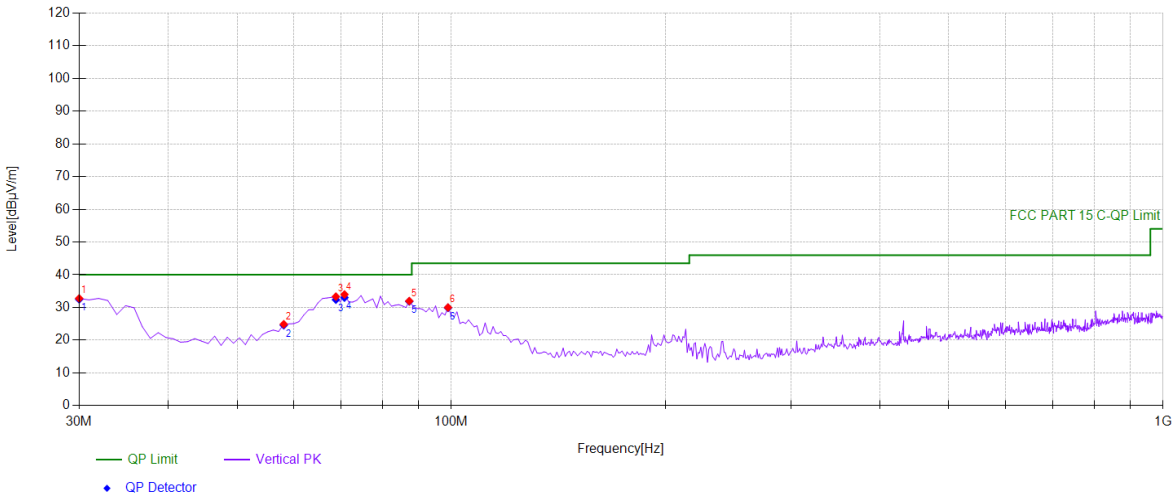

Suspected Data List								
NO.	Freq. [MHz]	Reading [dBµV]	Factor [dB/m]	Level [dBµV/m]	Detector	Limit [dBµV/m]	Margin [dB]	Polarity
1	30	51.58	-18.80	32.78	PK	40.00	7.22	Vertical
2	58.1582	42.03	-17.14	24.89	PK	40.00	15.11	Vertical
3	68.8388	51.94	-18.61	33.33	PK	40.00	6.67	Vertical
4	70.7808	52.86	-18.88	33.98	PK	40.00	6.02	Vertical
5	87.2873	51.14	-19.17	31.97	PK	40.00	8.03	Vertical
6	98.9389	47.39	-17.38	30.01	PK	43.50	13.49	Vertical

Final Data List					
NO.	Freq. [MHz]	Factor [dB/m]	QP Value [dBµV/m]	QP Limit [dBµV/m]	QP Margin [dB]
1	30	-18.80	32.48	40.00	7.52
2	58.1582	-17.14	24.59	40.00	15.41
3	68.8388	-18.61	32.38	40.00	7.62
4	70.7808	-18.88	33.03	40.00	6.97
5	87.2873	-19.17	31.86	40.00	8.14
6	98.9389	-17.38	29.90	43.50	13.60

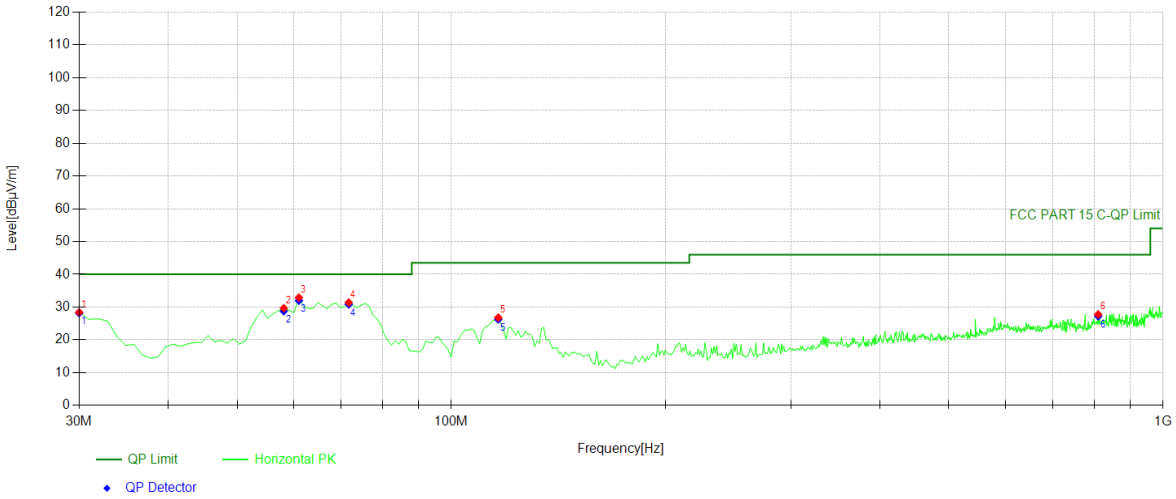

Suspected Data List								
NO.	Freq. [MHz]	Reading [dBµV]	Factor [dB/m]	Level [dBµV/m]	Detector	Limit [dBµV/m]	Margin [dB]	Polarity
1	30	47.22	-18.80	28.42	PK	40.00	11.58	Horizontal
2	58.1582	46.82	-17.14	29.68	PK	40.00	10.32	Horizontal
3	61.0711	50.45	-17.54	32.91	PK	40.00	7.09	Horizontal
4	71.7518	50.44	-19.03	31.41	PK	40.00	8.59	Horizontal
5	116.416	45.16	-18.34	26.82	PK	43.50	16.68	Horizontal
6	810.660	32.64	-4.86	27.78	PK	46.00	18.22	Horizontal

Final Data List					
NO.	Freq. [MHz]	Factor [dB/m]	QP Value [dBµV/m]	QP Limit [dBµV/m]	QP Margin [dB]
1	30	-18.80	28.15	40.00	11.85
2	58.1582	-17.14	28.76	40.00	11.24
3	61.0711	-17.54	31.99	40.00	8.01
4	71.7518	-19.03	30.85	40.00	9.15
5	116.4164	-18.34	26.26	43.50	17.24
6	810.6607	-4.86	27.22	46.00	18.78

Mode:	SRD 2480	Voltage:	DC 12V

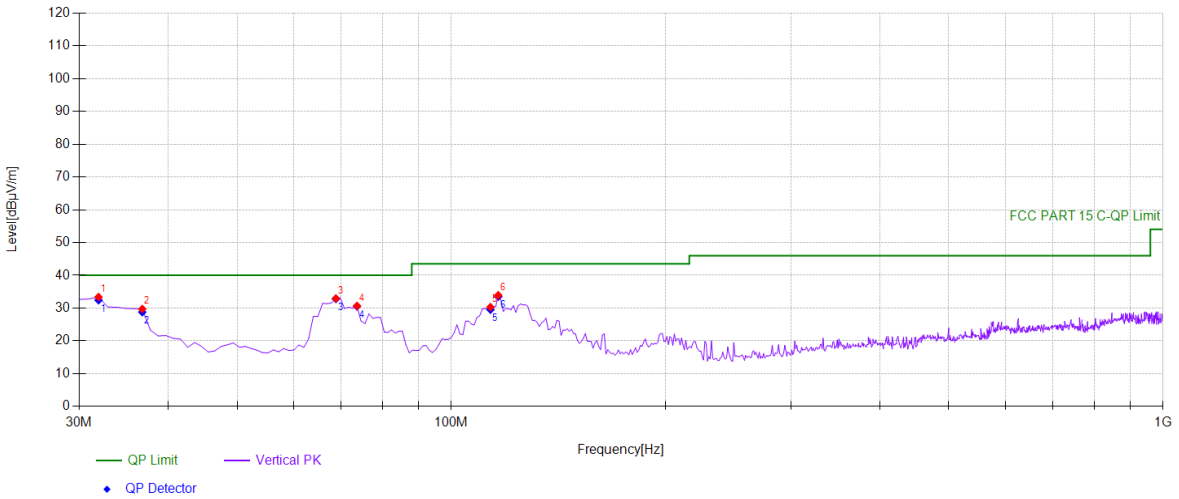

Suspected Data List								
NO.	Freq. [MHz]	Reading [dBµV]	Factor [dB/m]	Level [dBµV/m]	Detector	Limit [dBµV/m]	Margin [dB]	Polarity
1	31.9419	51.93	-18.54	33.39	PK	40.00	6.61	Vertical
2	36.7968	47.63	-17.89	29.74	PK	40.00	10.26	Vertical
3	68.8388	51.56	-18.61	32.95	PK	40.00	7.05	Vertical
4	73.6937	50.00	-19.33	30.67	PK	40.00	9.33	Vertical
5	113.503	48.43	-18.12	30.31	PK	43.50	13.19	Vertical
6	116.416	52.27	-18.34	33.93	PK	43.50	9.57	Vertical

Final Data List					
NO.	Freq. [MHz]	Factor [dB/m]	QP Value [dBµV/m]	QP Limit [dBµV/m]	QP Margin [dB]
1	31.9419	-18.54	32.42	40.00	7.58
2	36.7968	-17.89	28.77	40.00	11.23
3	68.8388	-18.61	32.82	40.00	7.18
4	73.6937	-19.33	30.54	40.00	9.46
5	113.5035	-18.12	29.54	43.50	13.96
6	116.4164	-18.34	33.52	43.50	9.98

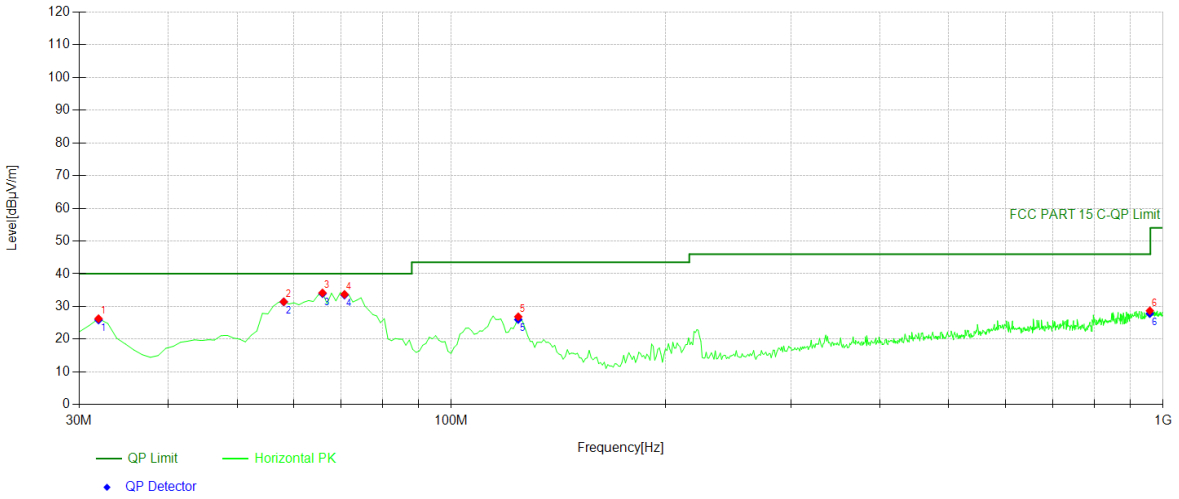

Suspected Data List								
NO.	Freq. [MHz]	Reading [dBµV]	Factor [dB/m]	Level [dBµV/m]	Detector	Limit [dBµV/m]	Margin [dB]	Polarity
1	31.9419	44.83	-18.54	26.29	PK	40.00	13.71	Horizontal
2	58.1582	48.60	-17.14	31.46	PK	40.00	8.54	Horizontal
3	65.9259	52.37	-18.21	34.16	PK	40.00	5.84	Horizontal
4	70.7808	52.60	-18.88	33.72	PK	40.00	6.28	Horizontal
5	124.184	45.71	-18.84	26.87	PK	43.50	16.63	Horizontal
6	958.248	30.76	-2.07	28.69	PK	46.00	17.31	Horizontal

Final Data List					
NO.	Freq. [MHz]	Factor [dB/m]	QP Value [dBµV/m]	QP Limit [dBµV/m]	QP Margin [dB]
1	31.9419	-18.54	25.87	40.00	14.13
2	58.1582	-17.14	31.40	40.00	8.60
3	65.9259	-18.21	33.93	40.00	6.07
4	70.7808	-18.88	33.49	40.00	6.51
5	124.1842	-18.84	26.00	43.50	17.50
6	958.2482	-2.07	27.82	46.00	18.18

8.3 CONDUCTED EMISSIONS TEST

8.3.1 Applicable Standard

According to FCC Part 15.207(a)

8.3.2 Conformance Limit

Conducted Emission Limit		
Frequency(MHz)	Quasi-peak	Average
0.15-0.5	66-56	56-46
0.5-5.0	56	46
5.0-30.0	60	50

Note: 1. The lower limit shall apply at the transition frequencies
2. The limit decreases in line with the logarithm of the frequency in the range of 0.15 to 0.50MHz.

8.3.3 Test Configuration

Test according to clause 7.3 conducted emission test setup

8.3.4 Test Procedure

The EUT was placed on a table which is 0.8m above ground plane.
Maximum procedure was performed on the highest emissions to ensure EUT compliance.
Repeat above procedures until all frequency measured were complete.

8.3.5 Test Results

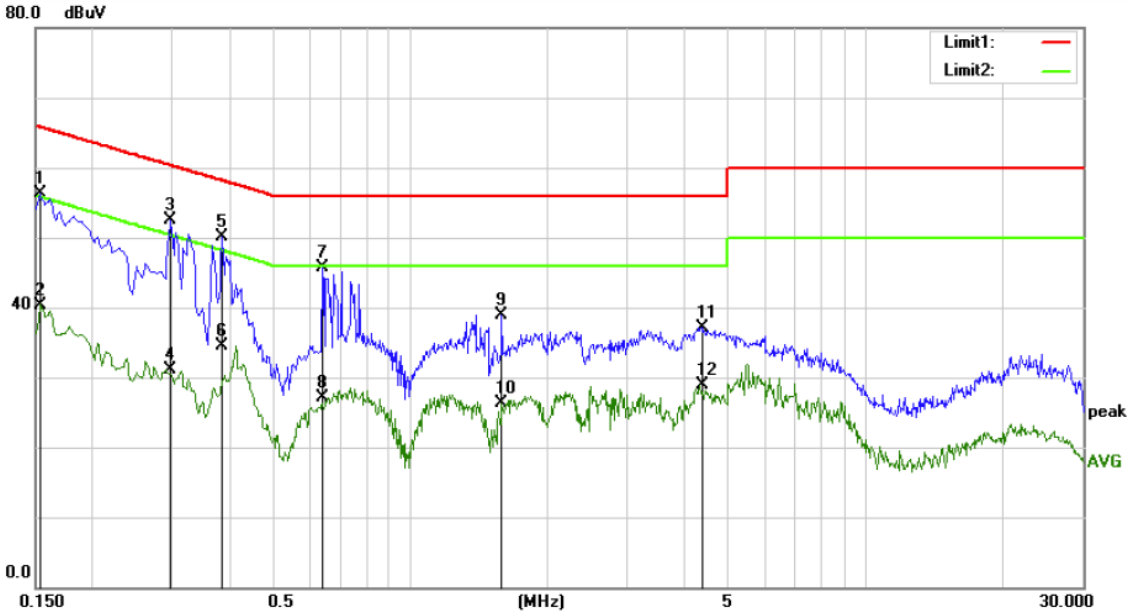

Site Conduction 2# Phase: *N* Temperature: 23.4

Limit: (CE)FCC Part15 B class B_QP Power: DC 12V Humidity: 45 %

Mode: 2.4G SRD mode

Note:

No.	Mk.	Freq.	Reading Level	Correct Factor	Measure-ment	Limit	Over		
		MHz	dBuV	dB	dBuV	dBuV	dB	Detector	Comment
1		0.1540	45.79	10.51	56.30	65.78	-9.48	QP	
2		0.1540	29.89	10.51	40.40	55.78	-15.38	AVG	
3	*	0.2980	41.90	10.57	52.47	60.30	-7.83	QP	
4		0.2980	20.55	10.57	31.12	50.30	-19.18	AVG	
5		0.3860	39.50	10.60	50.10	58.15	-8.05	QP	
6		0.3860	23.82	10.60	34.42	48.15	-13.73	AVG	
7		0.6420	35.14	10.59	45.73	56.00	-10.27	QP	
8		0.6420	16.43	10.59	27.02	46.00	-18.98	AVG	
9		1.5860	28.40	10.59	38.99	56.00	-17.01	QP	
10		1.5860	15.70	10.59	26.29	46.00	-19.71	AVG	
11		4.3780	26.42	10.74	37.16	56.00	-18.84	QP	
12		4.3780	18.13	10.74	28.87	46.00	-17.13	AVG	

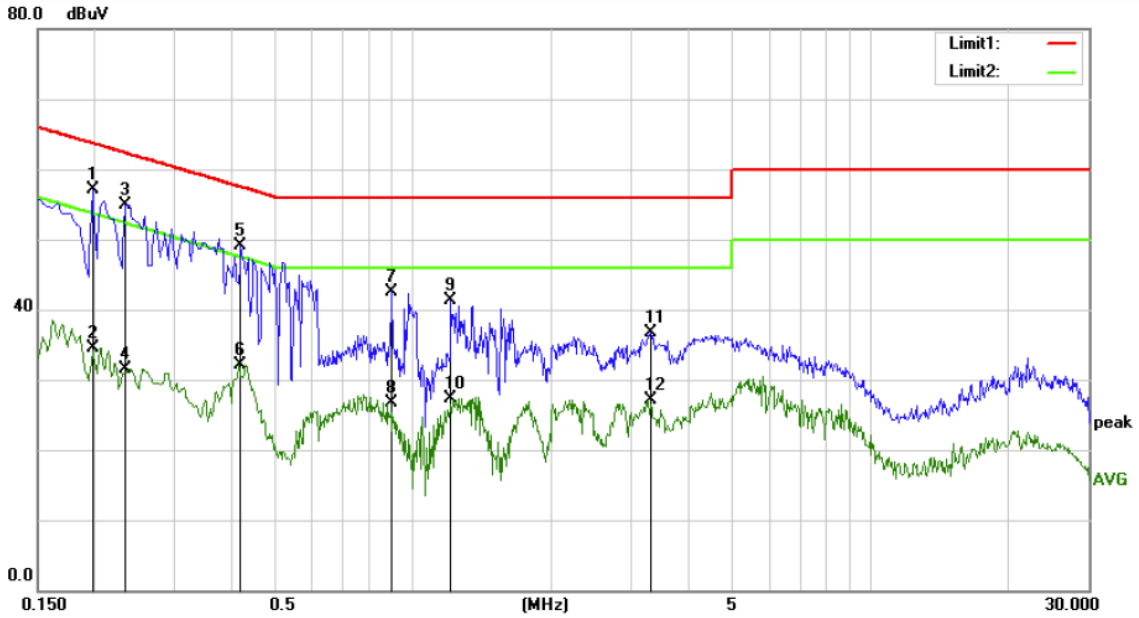

Site Conduction 2# Phase: *L1* Temperature: 23.4

Limit: (CE)FCC Part15 B class B_QP Power: DC 12V Humidity: 45 %

Mode: 2.4G SRD mode

Note:

No.	Mk.	Freq.	Reading Level	Correct Factor	Measure-ment	Limit	Over		
		MHz	dBuV	dB	dBuV	dBuV	dB	Detector	Comment
1	*	0.1980	46.50	10.54	57.04	63.69	-6.65	QP	
2		0.1980	24.03	10.54	34.57	53.69	-19.12	AVG	
3		0.2340	44.39	10.55	54.94	62.31	-7.37	QP	
4		0.2340	20.95	10.55	31.50	52.31	-20.81	AVG	
5		0.4180	38.42	10.61	49.03	57.49	-8.46	QP	
6		0.4180	21.49	10.61	32.10	47.49	-15.39	AVG	
7		0.8980	32.03	10.54	42.57	56.00	-13.43	QP	
8		0.8980	16.17	10.54	26.71	46.00	-19.29	AVG	
9		1.2060	30.73	10.55	41.28	56.00	-14.72	QP	
10		1.2060	16.70	10.55	27.25	46.00	-18.75	AVG	
11		3.2980	26.05	10.69	36.74	56.00	-19.26	QP	
12		3.2980	16.36	10.69	27.05	46.00	-18.95	AVG	

8.4 ANTENNA APPLICATION

8.4.1 Antenna Requirement

Standard	Requirement
FCC CRF Part 15.203	An intentional radiator shall be designed to ensure that no antenna other than that furnished by the responsible party shall be used with the device. The use of a permanently attached antenna or of an antenna that uses a unique coupling to the intentional radiator shall be considered sufficient to comply with the provisions of this section. The manufacturer may design the unit so that a broken antenna can be replaced by the user, but the use of a standard antenna jack or electrical connector is prohibited. This requirement does not apply to carrier current devices or to devices operated under the provisions of §15.211, §15.213, §15.217, §15.219, or §15.221. Further, this requirement does not apply to intentional radiators that must be professionally installed, such as perimeter protection systems and some field disturbance sensors, or to other intentional radiators which, in accordance with §15.31(d), must be measured at the installation site. However, the installer shall be responsible for ensuring that the proper antenna is employed so that the limits in this part are not exceeded.

For intentional device, according to FCC 47 CFR Section 15.203, an intentional radiator shall be designed to ensure that no antenna other than that furnished by the responsible party shall be used with the device.

8.4.2 Result

PASS.

- The EUT has 1 antennas: an Steel Antenna for2.4G, antenna has a gain of 4.25 dBi;

Note: ☒ Antenna use a permanently attached antenna which is not replaceable.
☐ Not using a standard antenna jack or electrical connector for antenna replacement
☐ The antenna has to be professionally installed (please provide method of installation)

which in accordance to section 15.203, please refer to the internal photos.

Detail of factor for radiated emission

Frequency(MHz)	Ant_F(dB)	Cab_L(dB)	Preamp(dB)	Correct Factor(dB)
0.009	20.6	0.03	\	20.63
0.15	20.7	0.1	\	20.8
1	20.9	0.15	\	21.05
10	20.1	0.28	\	20.38
30	18.8	0.45	\	19.25
30	11.7	0.62	27.9	-15.58
100	12.5	1.02	27.8	-14.28
300	12.9	1.91	27.5	-12.69
600	19.2	2.92	27	-4.88
800	21.1	3.54	26.6	-1.96
1000	22.3	4.17	26.2	0.27
1000	25.6	1.76	41.4	-14.04
3000	28.9	3.27	43.2	-11.03
5000	31.1	4.2	44.6	-9.3
8000	36.2	5.95	44.7	-2.55
10000	38.4	6.3	43.9	0.8
12000	38.5	7.14	42.3	3.34
15000	40.2	8.15	41.4	6.95
18000	45.4	9.02	41.3	13.12
18000	37.9	1.81	47.9	-8.19
21000	37.9	1.95	48.7	-8.85
25000	39.3	2.01	42.8	-1.49
28000	39.6	2.16	46.0	-4.24
31000	41.2	2.24	44.5	-1.06
34000	41.5	2.29	46.6	-2.81
37000	43.8	2.30	46.4	-0.3
40000	43.2	2.50	42.2	3.5