tenera CARE

Hardware Guide

Version 1.6

Feb, 2021

TABLE OF CONTENTS

Table of Contents

1.0 INTRODUCTION 2
1.2 PROVISIONING PROCEDURE 6
1.3 INSTALLER CONSOLE PROCEDURE 9
1.4 BRACELET SPECIFICATIONS 11
1.5 BEACON SPECIFICATIONS 12
1.6 RF CERTIFICATION NOTICES 13
Beacon Information 13
Tag Information 13
FCC Regulatory Statements 13
RF Exposure Warning (FCC) 13
ISED Regulatory Statements 14
RF Exposure Information (ISED) 14

This material is the property of GeoNavo Positioning Systems, Inc. It may contain certain confidential and proprietary information and is not to be reproduced, distributed or otherwise disclosed to any third party without permission of GeoNavo Positioning Systems, Inc. All rights, including copyright and patent rights are reserved by GeoNavo Positioning Systems, Inc. © 2017 GeoNavo Positioning Systems, Inc.

1.0 INTRODUCTION

The Hardware Guide provides users with an overview of how to install and provision the Tenera Bracelet and Beacon. It outlines the hardware specifications

This material is the property of GeoNavo Positioning Systems, Inc. It may contain certain confidential and proprietary information and is not to be reproduced, distributed or otherwise disclosed to any third party without permission of GeoNavo Positioning Systems, Inc. All rights, including copyright and patent rights are reserved by GeoNavo Positioning Systems, Inc. © 2017 GeoNavo Positioning Systems, Inc.

1.1 HARDWARE OVERVIEW

The system is 100% designed and manufactured in Canada. In order to locate a resident, staff, visitor, contractor or asset the system triangulates the location utilizing Ultra-Wideband (UWB) radio technology. The system relies on 4 key pieces of technology in order to triangulate the X-Y-Z three-dimensional location and consists of the following:

1. Tenera Bracelet:

   The bracelet is a sleek and comfortable wearable that broadcast its location every second to the beacons. It uses IEEE802:15.4-2011 UWB technology for the highest accuracy positioning available. The bracelet is dust and water resistant with an IP67 rating. Rechargeable Lithium Ion batteries are used to make maintenance and recharging easy. The straps use standard 18mm mounting hardware and can be customized to suit the user with different color options and locking mechanisms.

   To turn the bracelet on, hold down the red button for 10 seconds. The button will then flash a light to confirm it's on. To turn the bracelet off, hold down the red button for 10 seconds. If you push the red button and the led lights up, then you know the bracelet is turned on. If you push the red button and the led does not light up, then you know the bracelet is turned off.

This material is the property of GeoNavo Positioning Systems, Inc. It may contain certain confidential and proprietary information and is not to be reproduced, distributed or otherwise disclosed to any third party without permission of GeoNavo Positioning Systems, Inc. All rights, including copyright and patent rights are reserved by GeoNavo Positioning Systems, Inc. © 2017 GeoNavo Positioning Systems, Inc.

2. Tenera Beacon:

   The beacons are strategically mounted in fixed positions around the facility during the initial installation. Their fixed location is loaded through the installer console (appendix F). The beacons listen for UWB transmissions from the bracelet and communicate with the cloud servers to perform real time localization. Positioning algorithms with a strong emphasis on multipath rejection and sophisticated modeling give high performance in difficult Non-Line of Sight (NLOS) environments.

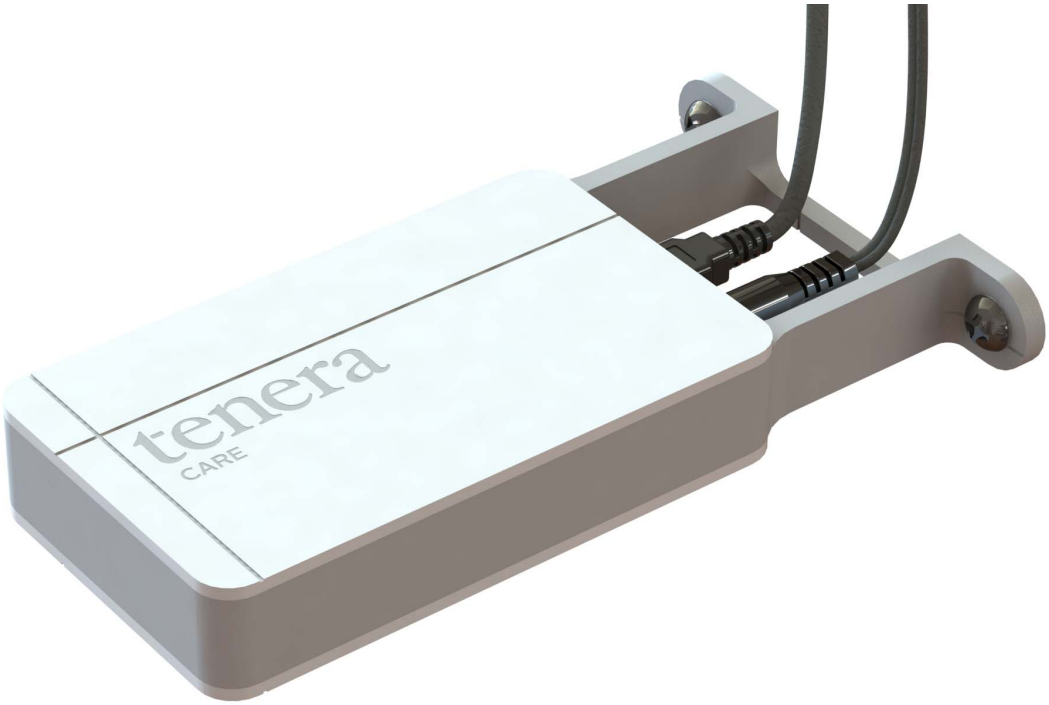

This material is the property of GeoNavo Positioning Systems, Inc. It may contain certain confidential and proprietary information and is not to be reproduced, distributed or otherwise disclosed to any third party without permission of GeoNavo Positioning Systems, Inc. All rights, including copyright and patent rights are reserved by GeoNavo Positioning Systems, Inc. © 2017 GeoNavo Positioning Systems, Inc.

3. Google WiFi Mesh Network:

   The Google WiFi Mesh network creates a private wireless network allowing the Tenera Platform to transfer the X-Y-Z position of each bracelet to the cloud servers for processing. The Mesh network provides more coverage than a traditional router by using multiple WiFi points together to create a connected system providing a strong signal throughout the facility. The Google devices only require 1 device to be wired into the network while the remaining devices only require local power.

4. Tenera Console:

   The Tenera platform can be accessed from a web console, tablet or the companion Android Application. The web console is used to locate residents, staff, visitors, contractors and assets, acknowledge notifications and alerts, assign rules and run reports.

This material is the property of GeoNavo Positioning Systems, Inc. It may contain certain confidential and proprietary information and is not to be reproduced, distributed or otherwise disclosed to any third party without permission of GeoNavo Positioning Systems, Inc. All rights, including copyright and patent rights are reserved by GeoNavo Positioning Systems, Inc. © 2017 GeoNavo Positioning Systems, Inc.

1.2 Provisioning Procedure

If the application is not already loaded on your android device, please contact Tenera for the latest version of the application.

1. Ensure the beacon is plugged into a local power source and Bluetooth is turned on for your device.

2. Load the Provisioning Application and select “Start Provisioning”

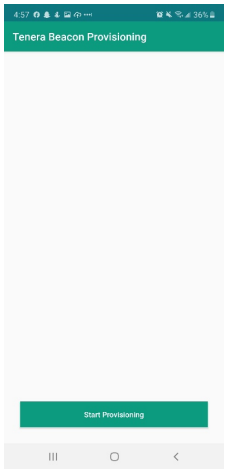

3. From within the provisioning app you should see the beacon appear in the app. If the beacon does not appear hit the “Scan Again” button within the app and verify that the beacon is plugged in and has power.

This material is the property of GeoNavo Positioning Systems, Inc. It may contain certain confidential and proprietary information and is not to be reproduced, distributed or otherwise disclosed to any third party without permission of GeoNavo Positioning Systems, Inc. All rights, including copyright and patent rights are reserved by GeoNavo Positioning Systems, Inc. © 2017 GeoNavo Positioning Systems, Inc.

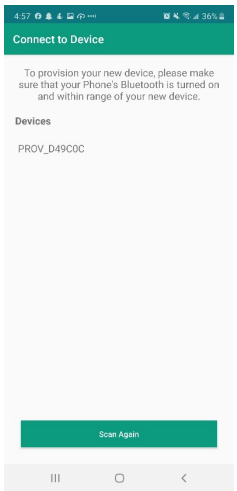

4. Select the device you want to provision.

5. Enter all of the information provided to you by the lead or project manager. This should include the Wireless SSID, the Wireless Password, your name, the Facility Name, Building Name, & Floor. The information only needs to be entered in one time and then each subsequent beacon you provision will remember the information. Once you verify the information is correct select "Provision"

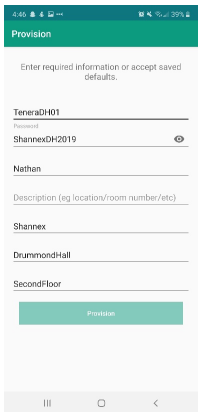

6. Once you press the "Provision" button, the beacon will start provisioning. You will see a message displaying "Session Established" & then "Configuration Successfully Applied"

This material is the property of GeoNavo Positioning Systems, Inc. It may contain certain confidential and proprietary information and is not to be reproduced, distributed or otherwise disclosed to any third party without permission of GeoNavo Positioning Systems, Inc. All rights, including copyright and patent rights are reserved by GeoNavo Positioning Systems, Inc. © 2017 GeoNavo Positioning Systems, Inc.

7. Once the provisioning is complete the screen will display a message saying “Device has been successfully provisioned!”

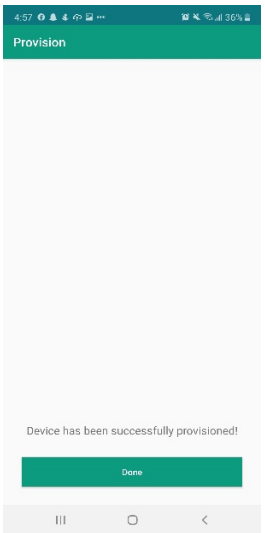

This material is the property of GeoNavo Positioning Systems, Inc. It may contain certain confidential and proprietary information and is not to be reproduced, distributed or otherwise disclosed to any third party without permission of GeoNavo Positioning Systems, Inc. All rights, including copyright and patent rights are reserved by GeoNavo Positioning Systems, Inc. © 2017 GeoNavo Positioning Systems, Inc.

1.3 Installer Console Procedure

1. Log into the Tenera Admin Console: https://tenera-admin-ca.firebaseapp.com/login
2. Select the Customer Name from the drop-down menu in the top right corner
3. Select Install from the left side menu

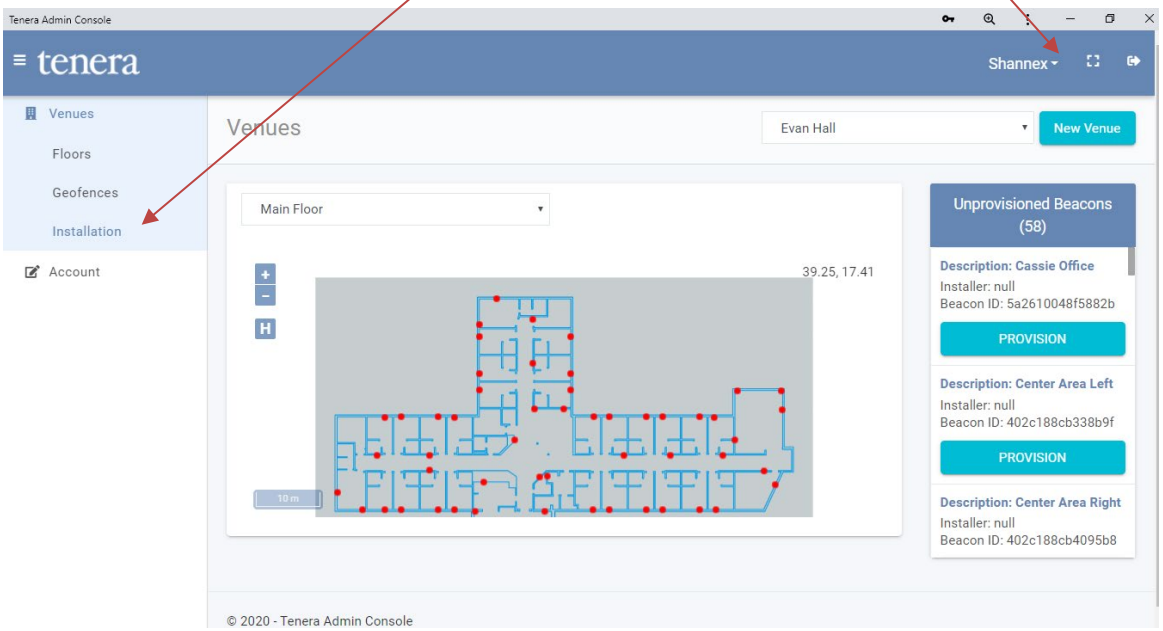

4. Reference the beacon ID and measurements you captured during the Mounting Procedure (Appendix D) and Provisioning Procedure (Appendix E) and select the beacon from the right hand side of the screen and select provision.

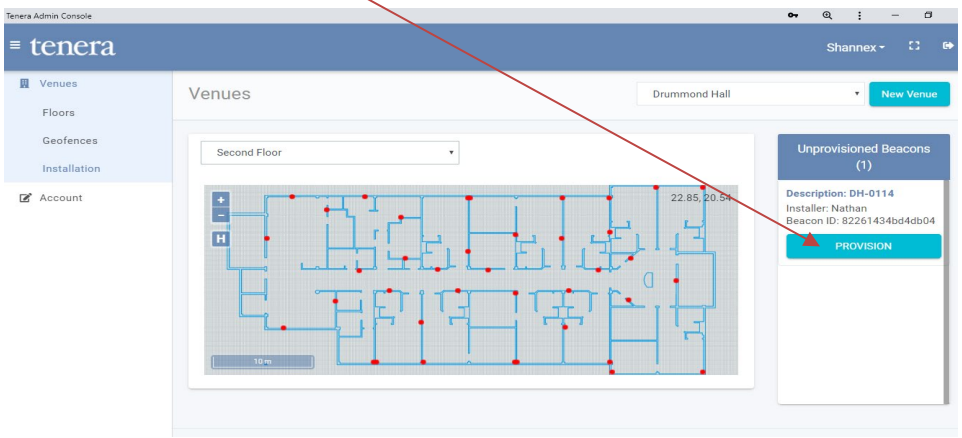

This material is the property of GeoNavo Positioning Systems, Inc. It may contain certain confidential and proprietary information and is not to be reproduced, distributed or otherwise disclosed to any third party without permission of GeoNavo Positioning Systems, Inc. All rights, including copyright and patent rights are reserved by GeoNavo Positioning Systems, Inc. © 2017 GeoNavo Positioning Systems, Inc.

5. Once you select the provision, you will place the blue dot where the beacon is deployed in the facility. Ensure you are in the correct room.

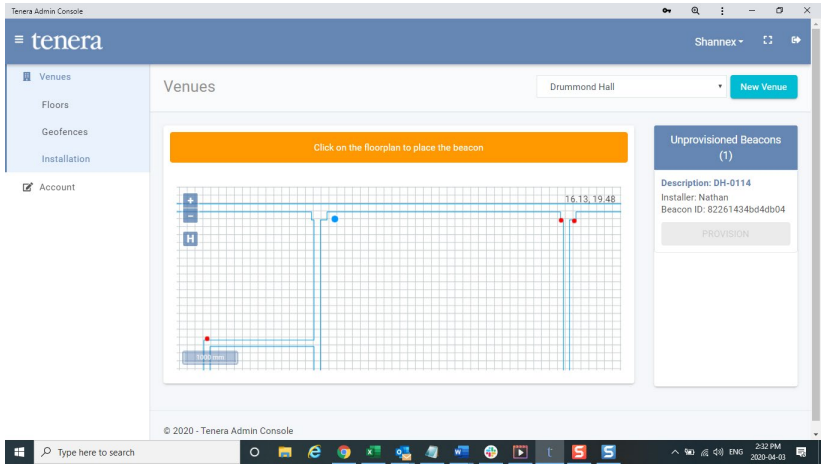

6. The X & Y coordinates will automatically generate based on where you placed the beacon. You will need to enter the Z coordinate in meters. Select provision once you confirm the coordinates.

This material is the property of GeoNavo Positioning Systems, Inc. It may contain certain confidential and proprietary information and is not to be reproduced, distributed or otherwise disclosed to any third party without permission of GeoNavo Positioning Systems, Inc. All rights, including copyright and patent rights are reserved by GeoNavo Positioning Systems, Inc. © 2017 GeoNavo Positioning Systems, Inc.

1.4 Bracelet Specifications

tenera
CARE

1

Tenera Bracelet

I. Features

- DW1000 Ultra WideBand chipset for high accuracy positioning
- Sleek and comfortable wearable design
- 1 year battery life with rechargeable LiPo battery
- IP67 ingress protection as per IEC 60529
- Facility wide nurse call with visual confirmation
- 1 Hz in motion update rate
- Customizable straps
- Standy mode for storage and transportation

II. Description

The wearable bracelet uses IEEE802.15.4-2011 UWB technology for the highest accuracy positioning available. The positioning algorithms was designed with the main goals of accuracy, battery life, bandwidth and reliability. Each bracelet updates its position once per second while in motion for real time localization. High bandwidth means that over 200 bracelets can be in any one location without impact on latency.

Rechargeable Lithium Polymer batteries were used to make maintenance and recharging easy. A charge takes two hours and will last a full year. Despite this the bracelet is the smallest on the market and is contoured to the wrist making it extremely comfortable to wear.

Fig. 1: Tenera Bracelet

The straps use standard 18mm mounting hardware and can be customized to suit the user with different color options and locking mechanisms available. Default is a soft, easy to clean silicone.

III. Specifications

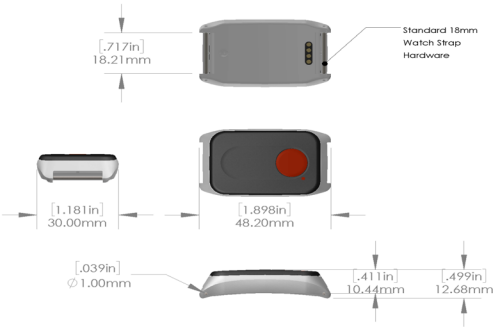

Fig. 2: Dimensioned Drawing

Parameter	Value
Dimensions	12.7 x 48.2 x 30 [mm]
Weight	30 [g]
Operational Range	15 [m]
Operating Temperature	-15 ... +60 [°C]
Charging Temperature	15 ... +45 [°C]
Center Frequency	6489.6 []MHz]
Bandwidth	499.2 [MHz]

©Tenera Care 2019 Subject to change without notice

This material is the property of GeoNavo Positioning Systems, Inc. It may contain certain confidential and proprietary information and is not to be reproduced, distributed or otherwise disclosed to any third party without permission of GeoNavo Positioning Systems, Inc. All rights, including copyright and patent rights are reserved by GeoNavo Positioning Systems, Inc. © 2017 GeoNavo Positioning Systems, Inc.

1.5 Beacon Specifications

tenera CARE

Tenera Beacon

I. Features

- DW1000 Ultra WideBand chipset for high accuracy positioning
- Small and unobtrusive design
- Easy installation
- Data backhaul over WiFi
- 1 hour UPS battery life

II. Description

The beacons are mounted at fixed locations around the facility during the installation. Their position is measured and the floorplan is uploaded to the cloud. They then listen for UWB transmissions from the wearable bracelet and communicate with the cloud servers to perform real time localization. Positioning algorithms with a strong emphasis on multipath rejection and sophisticated modelling give high performance in difficult Non Line Of Sight (NLOS) environments. This sets Tenera apart for real world performance.

Installation is does not require dedicated cable runs. Power is supplied via various length microUSB cables and a wall adapter (provided). Additionally, rechargeable battery provides an un-interuptable supply during temporary power outages. Wireless backhaul eliminates the need for dedicated infrastructure.

Fig. 1: Tenera Beacon

III. Specifications

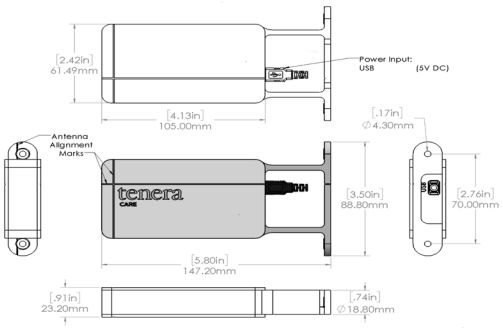

Fig. 2: Dimensioned Drawing

TABLE I: Electrical

Parameter	Value
Dimensions	147.20 x 23.20 x 88.80 [mm]
Weight	250 [g]
Operational Range	15 [m]
Operating Temperature	-15 ... +60 [°C]
Center Frequency	6489.6 []MHz]
Bandwidth	499.2 [MHz]
Micro USB Voltage	5 [V]
Micro USB Current	2000 [mA]

©Tenera Care 2020 Subject to change without notice

This material is the property of GeoNavo Positioning Systems, Inc. It may contain certain confidential and proprietary information and is not to be reproduced, distributed or otherwise disclosed to any third party without permission of GeoNavo Positioning Systems, Inc. All rights, including copyright and patent rights are reserved by GeoNavo Positioning Systems, Inc. © 2017 GeoNavo Positioning Systems, Inc.

1.6 RF CERTIFICATION NOTICES

Beacon Information

Model: TC-B10001
FCC ID: 2AYOO-TCB10001
IC: 26876-TCB10001
CAN ICES-3 (B)/NMB-3(B)

Tag Information

Model: TC-T10001
Contains
FCC ID: 2AQ33-DWM10001
IC: 23794-DWM1001
CAN ICES-3 (B)/NMB-3(B)

FCC Regulatory Statements

This device complies with Part 15 of the FCC Rules. Operation is subject to the following two conditions:

(1) This device may not cause harmful interference.
(2) This device must accept any interference received, including interference that may cause undesired operation.

This equipment has been tested and found to comply with the limits for a Class B digital device, pursuant to part 15 of the Federal Communication Commission (FCC) rules. These limits are designed to provide reasonable protection against harmful interference in a residential installation. This equipment generates, uses and can radiate radio frequency energy and, if not installed and used in accordance with the instructions, may cause harmful interference to radio communications. However, there is no guarantee that interference will not occur in a particular installation. If this equipment causes harmful interference to radio or television reception, which can be determined by turning the equipment off and on, the user is encouraged to try to correct the interference by doing one or more of the following measures:

- Reorient or relocate the receiving antenna.
- Increase the separation between the equipment and receiver.
- Connect the equipment into an outlet on a circuit different from that to which the receiver is connected.
- Consult the dealer or an experienced radio/TV technician for help.

NOTE: THE GRANTEE IS NOT RESPONSIBLE FOR ANY CHANGES OR MODIFICATIONS NOT EXPRESSLY APPROVED BY THE PARTY RESPONSIBLE FOR COMPLIANCE. SUCH MODIFICATIONS COULD VOID THE USER'S AUTHORITY TO OPERATE THE EQUIPMENT.

RF Exposure Warning (FCC)

This equipment complies with FCC radiation exposure limits set forth for an uncontrolled environment. In order to avoid the possibility of exceeding the FCC radio frequency exposure limits, human proximity to

This material is the property of GeoNavo Positioning Systems, Inc. It may contain certain confidential and proprietary information and is not to be reproduced, distributed or otherwise disclosed to any third party without permission of GeoNavo Positioning Systems, Inc. All rights, including copyright and patent rights are reserved by GeoNavo Positioning Systems, Inc. © 2017 GeoNavo Positioning Systems, Inc.

the antenna shall not be less than 20 cm during normal operation and must not be co-located or operating in conjunction with any other antenna or transmitter.

ISED Regulatory Statements

This device complies with ISED Canada license-exempt RSS standard(s). Operation is subject to the following two conditions: (1) this device may not cause interference, and (2) this device must accept any interference, including interference that may cause undesired operation of the device.

Le présent appareil est conforme avec ISED Canada applicables aux appareils radio exempts de licence. L'exploitation est autorisée aux deux conditions suivantes: (1) l'appareil ne doit pas produire de brouillage, et (2) l'utilisateur de l'appareil doit accepter tout brouillage radioélectrique subi, même si le brouillage est susceptible d'en compromettre le fonctionnement.

CAN ICES-3 (B)/NMB-3(B)

RF Exposure Information (ISED)

This equipment complies with ISED RSS-102 radiation exposure limits set forth for an uncontrolled environment. This transmitter must be installed to provide a separation distance of at least 20 cm from all persons and must not be co-located or operating in conjunction with any other antenna or transmitter.

Cet équipement est conforme avec ISED RSS-102 des limites d'exposition aux rayonnements définies pour un environnement non contrôlé. Cet émetteur doit être installé à au moins 20 cm de toute personne et ne doit pas être colocalisé ou fonctionner en association avec une autre antenne ou émetteur.

This material is the property of GeoNavo Positioning Systems, Inc. It may contain certain confidential and proprietary information and is not to be reproduced, distributed or otherwise disclosed to any third party without permission of GeoNavo Positioning Systems, Inc. All rights, including copyright and patent rights are reserved by GeoNavo Positioning Systems, Inc. © 2017 GeoNavo Positioning Systems, Inc.