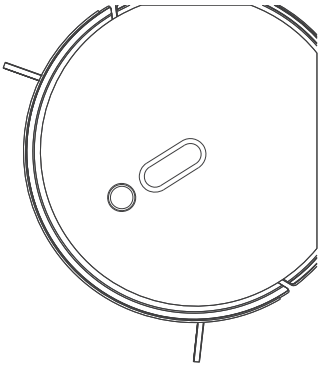

Robot Vacuum Cleaner

User Manual

Model: C106

Read this user manual carefully before using this product
and save it properly for further reference.

Important Safety Instructions

WARNING: TO REDUCE THE RISK OF INJURY OR DAMAGE, READ THE FOLLOWING SAFETY PRECAUTIONS WHEN SETTING UP, USING AND MAINTAINING YOUR ROBOT.

Cautions

- This product is designed for indoor floor cleaning only, do not use it outdoors(such as on an open-ended terrace), on any surface other than the ground (such as a sofa), or in any commercial or industrial environment.
- Do not use this product on elevated surfaces without barriers such as the floor of a loft, an open-ended terrace, or on top of furniture.
- Do not use the product when the ambient temperature is higher than 104°F (40°C), lower than 39°F (4°C), or if there are liquids or tacky substances on the floor.
- Before using the product, move wires off the ground or place them to the side to prevent them being pulled on by the cleaner.
- To prevent blocking the product and to avoid damage to valuables, remove light-weight items (such as plastic bags) and fragile objects (such as vases) from the floor before cleaning.
- Children should be supervised to ensure that they do not play with the appliance.
- This product is not intended for use by persons (including children) with reduced physical, sensory or mental capabilities, or lack of experience and knowledge,unless they have been given supervision or instruction concerning use of the product by a person responsible for their safety (CB).
- This product can be used by children aged from 8 years and above and persons with reduced physical,sensory or mental capabilities or lack of experience and knowledge if they have been given supervision or instruction concerning use of the product in a safe way and understand the hazards involved. Children shall not play with the product. Cleaning and user maintenance shall not be made by children without supervision (EU).

Important Safety Instructions

Cautions

- Keep the main brush cleaning tools out of reach of children.
- Do not place any object (including children and pets) on the product, whether it is in operation or not.
- Keep hair, loose clothing, fingers, and all parts of the body away from openings and moving parts.
- Do not use the product on burning objects (such as cigarette butts).
- Do not use the product on high pile carpets (product effectiveness may also be reduced on dark carpets).
- Do not use the product to clean hard or sharp objects (such as decoration wastes, glass and nails).
- Do not carry the product using the main unit cover, or collision buffer.
- The product must be switched off and the plug must be removed from socket-outlet before cleaning or maintaining the product.
- Do not use wet cloth or liquids for cleaning the product.
- Do not use the mopping module on carpets.
- Use the product according to the manual. Any loss or damage caused from improper use will be borne by the user.
- This product contains batteries that are only replaceable by skilled persons.

Important Safety Instructions

Battery and Charging

- Do not charge non-rechargeable batteries.
- For the purposes of recharging the battery, only use the detachable supply unit Anjou robot provided with this product.
- Do not dismantle, repair or modify the battery or charging dock.
- Keep the charging dock away from heat (such as heating vents).
- The battery must be removed from the appliance before it is scrapped.
- The product must be disconnected from the supply mains when removing the battery.
- The battery must be disposed of safely. Do not discard waste batteries. Leave them with a professional recycling organization.
- Do not wipe or clean the charger prongs with wet cloth or wet hands.
- If the power cord is damaged, stop using it immediately. It must be replaced by the manufacturer, its service agent, or similarly qualified persons to avoid a hazard.

Product Introduction

Robot

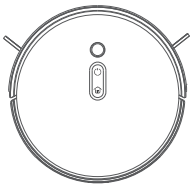

Robot Vacuum

Charging Dock

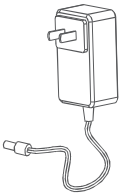

Adapter

Dustbin

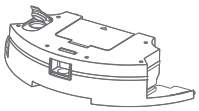

Adjustable
Water tank

Remote
Control

AAA Battery
for remote control x2

Cleaning
Tool

HEPA Filter

Mop Cloth

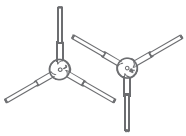

Side Brushes

User Manual

Product Introduction

Robot

Top view

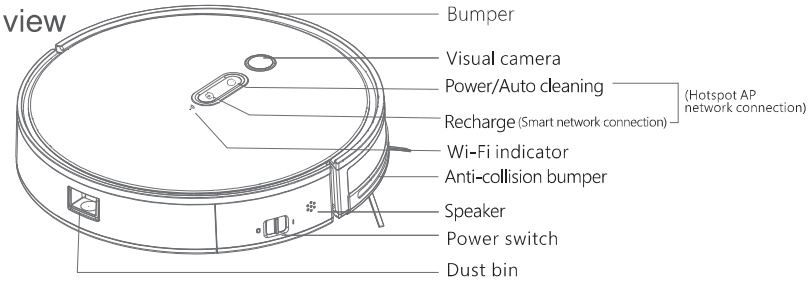

Docking station

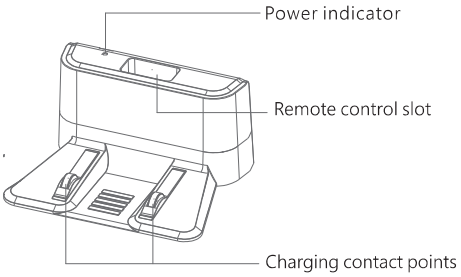

Bottom view

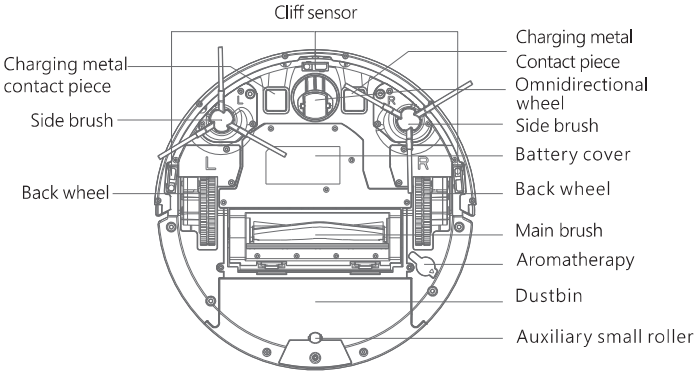

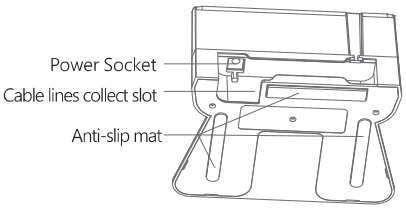

Product Introduction

Robot

Dust box

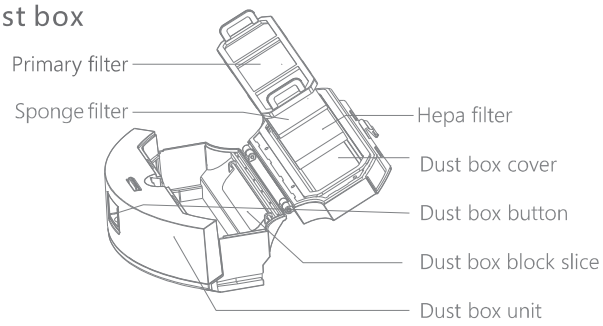

Remote control

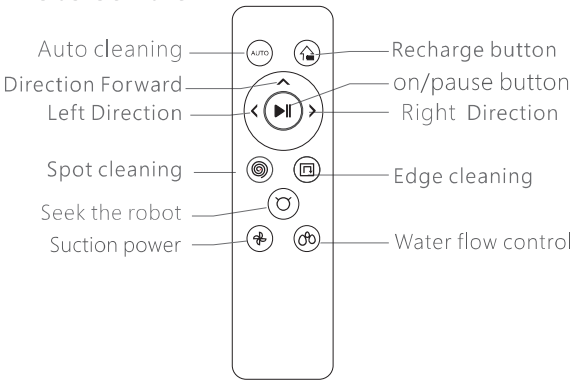

Water tank

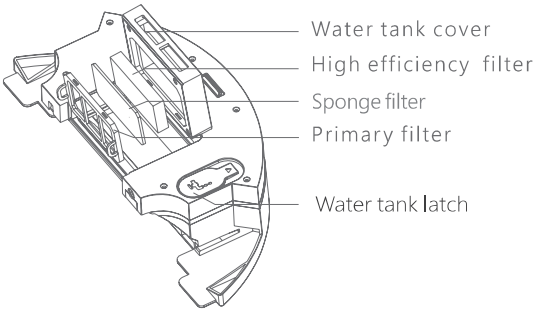

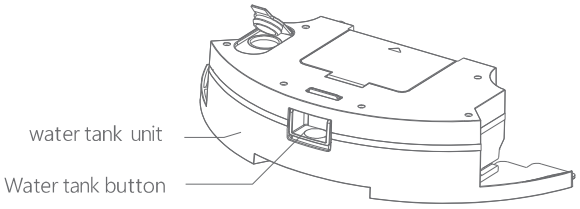

Installation
Using the robot

1.Remove the EVA foam on each side

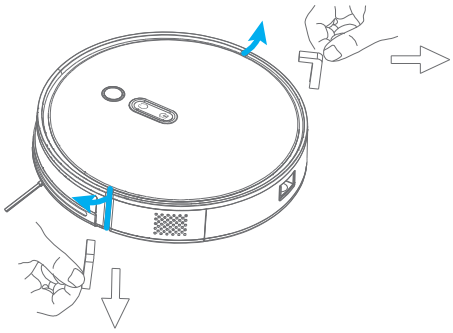

2. Place the charging dock against the wall on a flat surface and plug it into the mains power.

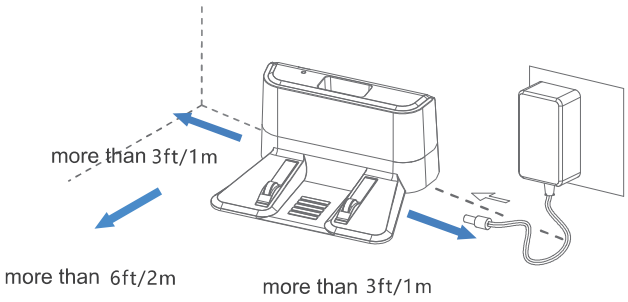

Note:
· The charging dock should have more than 1.0m (3.0ft) of clearance on each side, and more than 2.0m (6.0ft) in the front.
· If the power cable is vertical to the ground, it may be caught by the robot, causing the charging dock to be disconnected.
· The charging dock indicator is on when the charging dock is electrified, and off when the robot is charging.

Installation

Using the robot

3.Turn the robot over to install the side brushes.

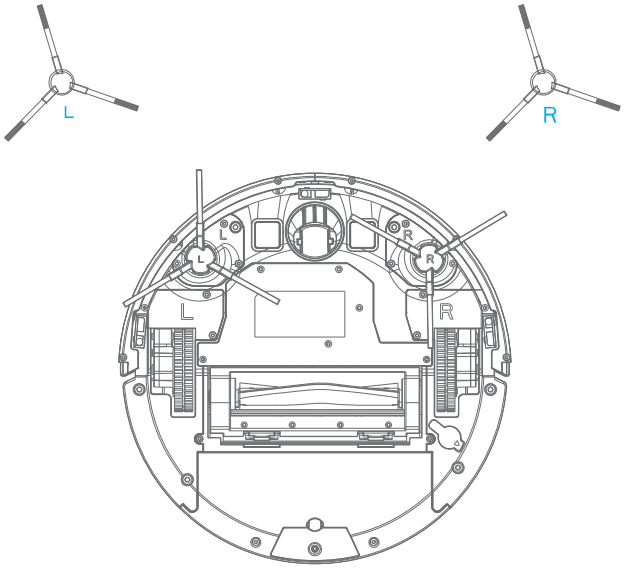

Install the side brushes

Install the side brushes on both sides of the roller at the bottom of the main unit. Pick up the side brushes with your hands and aim at the hole of the side brush installed on the base (note that the square column and the square hole correspond to each other), press it down to hear a "pa" sound, indicating that the side brush is installed in place.

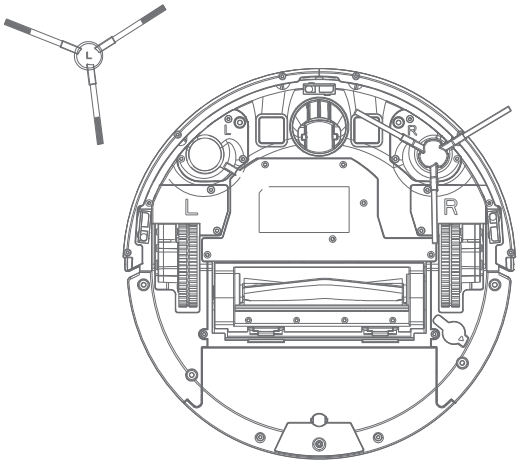

Installation

Using the robot

4. Power and charge

1.Auto: After cleaning, the robot will automatically return to the charging dock to charge.
2.Manual: In Pause mode, press the button to send the robot back to the charging dock.
3.Recharge by remote control

Note:
1.The battery is fully charged to prolong the battery life.
5 hours charging time for the first time.
2.Please keep charging dock power on. Or the robot can not find the charging dock.

Recharge Button "⌂" Indication in Charging	
Charging Status	Indicator of Recharge Button "⌂"
Low power/Back to charge	Blue light flashes
Charging	Blue light breathes
Charging completed	Blue light goes out

5. Power on/off/Pause

1.Turn on the main power switch
"I" is turned on, "O" is turned off.

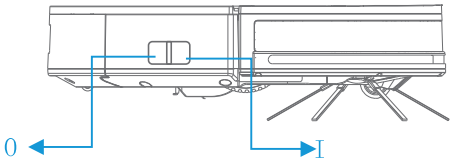

2.Press to ⏻ start cleaning
(Start up the default "zig-zag" auto cleaning mode)

3.Press the ⏻ button again to stop cleaning
(The robot is in standby mode)

4.The robot is not working if leaving dock station
The robot will be in standby mode.
If the robot does not work for a long time,
please disconnect the power.

6. Water tank

1.Install the mop cloth

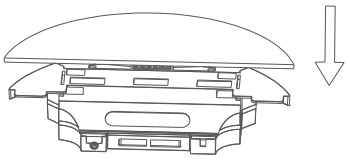

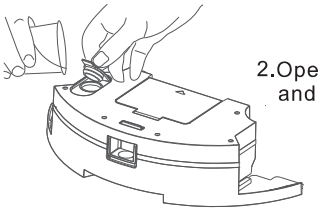

2.Open the water tank, fill it with water, and close it tightly

3.Install water tank

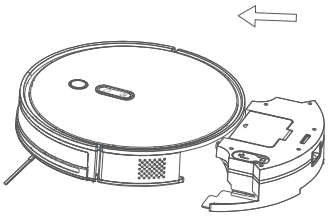

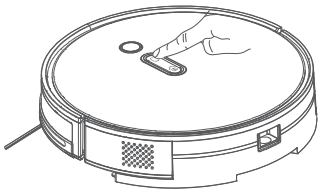

4. Start mopping

Note: After finishing mopping
Please empty the water. Take off the mop and clean it.

Note:

- It is recommended that all floors are vacuumed at least three times before the first mopping session to reduce excessive dirt bulidup on the mop
- To prevent corrosion or damage, do not use cleaning fluid or disinfection in the water tank.
- Remove the mopping module after mopping, empty residual water and clean the mop cloth to prevent mildew or unpleasant odors.
- Remove the mopping module if not mopping.

Instructions for use

Auto Cleaning

The robot defaults auto cleaning mode after power on.
Zig-zag cleaning

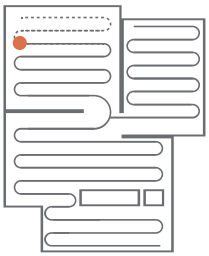

Spot Cleaning

Applicable for garbage concentrated area.
The robot cleans in a spiral shaped in designated area.
After cleanup,the robot will return to the center of square.

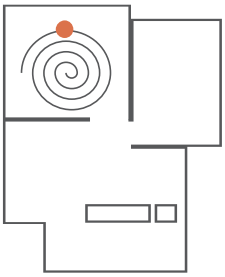

Edge Cleaning

The robot cleans around the wall edge.

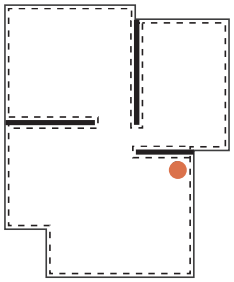

Schedule Cleaning

Use the app to set start times for scheduled cleanups.
The default cleaning mode is auto cleaning.

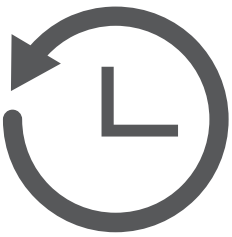

App Instruction

As the Tuya App is continuously being updated, your App may appear slightly different than what is pictured in this User Guide.
App needs to be used in the networked state and please connect to the home network first. Make sure the network is normal.

Download 1. Scan the QR code and download "Tuya Smart APP".
For ISO model phones, search for "Tuya Smart" in the APP store to download;
For Android model phones, search for Tuya Smart in the app store to download.

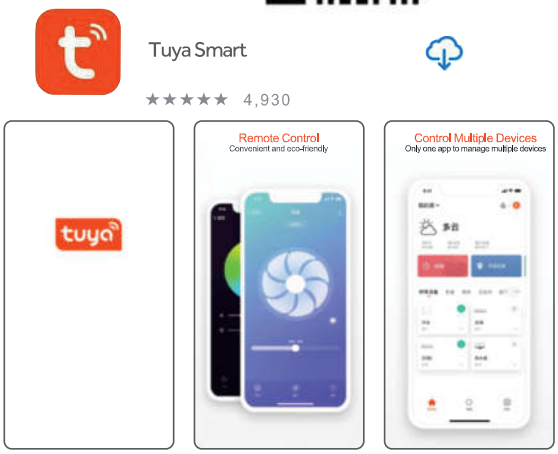

Sign up:
New users enter the registration page by clicking create new account.Use an unregistered mobile phone number/email, and set a login password by obtaining a verification code.
After registration, you can log in to use.

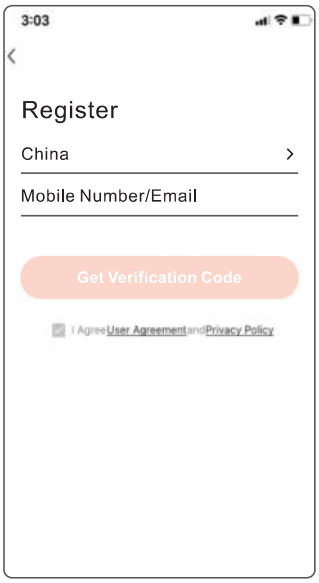

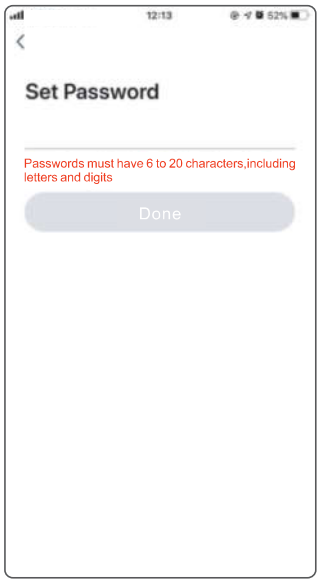

App Instruction

log in:

If you have an account, enter your account and password in the APP login interface to log in. If you forget the password, click Forgot Password, enter the registered mobile phone number/ email, and obtain the verification code to log in to the account.

Add device:

1. After login, click Add Device;
2. Click "Small Appliances" and then "robot vacuum cleaners"

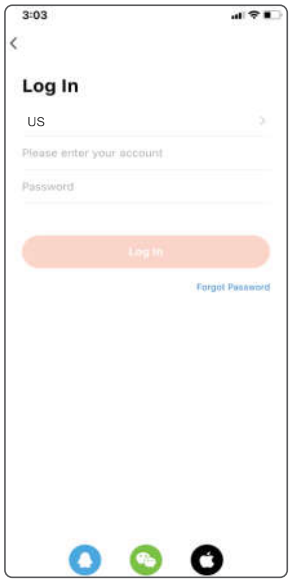

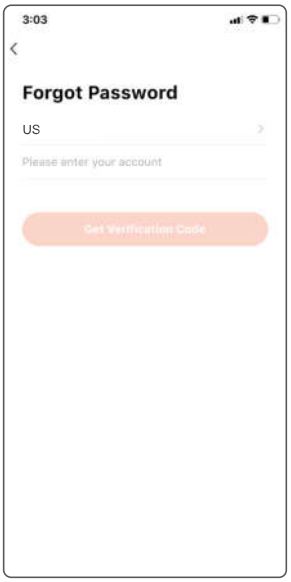

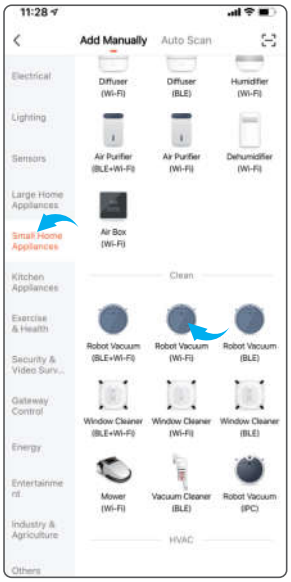

App Instruction

3. Connect to the regional wifi (2.4GHz), enter the password then click Next;At the same time, long time press the device's recharge button to the voice prompt "Network configuration, please wait for the network configuration result in the APP interface".The device WIFI indicator flashes quickly);

4. Check "Confirm that the indicator light is flashing fast" and click Next;
5. Show that the robot vacuum cleaner is being added;
6. Click Finish after adding successfully;

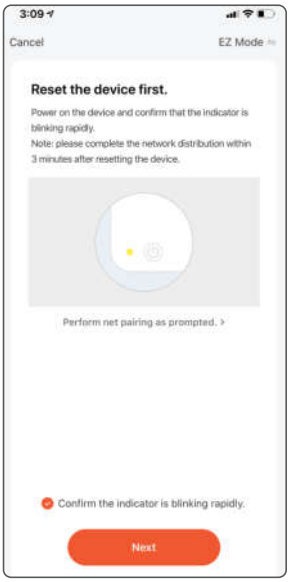

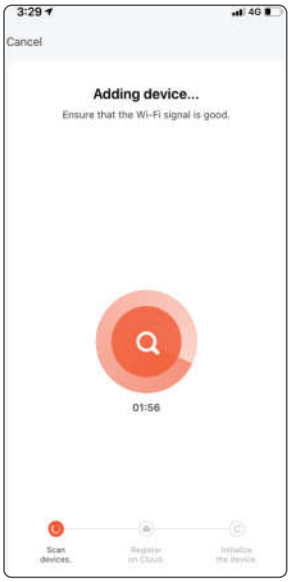

App Instruction

7. Hotspot AP network connection: If the smart network connection fails, switch the network connection mode according to the voice prompt , manually enter the Hotspot AP network connection, and long time press the ⏻ auto cleaning button and the recharge button at the same time until the WIFI light flashes slowly.

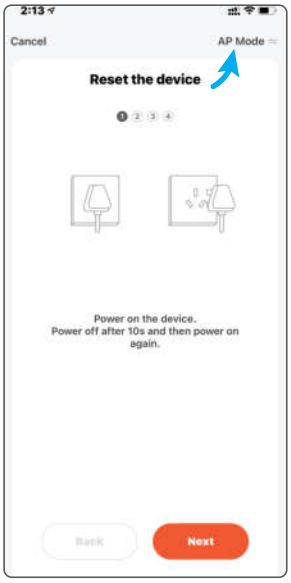

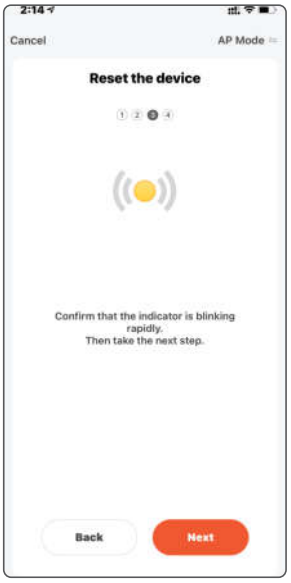

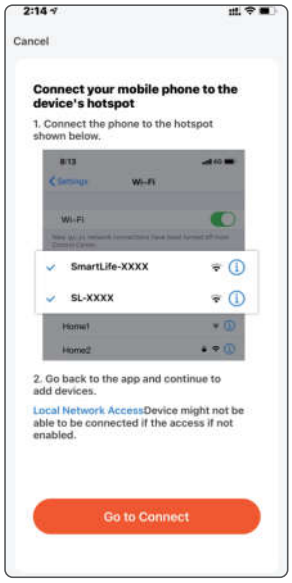

App Instruction

App interface

1.Three cleaning modes “Auto cleaning”, “Edge cleaning” and “Spot cleaning”.

Note:Change the cleaning mode, the current cleaning mode must be ended first;

2.Recharging: when the robot is in standby mode or auto cleaning mode, if you press the recharging button; and the robot will look for the charging dock for recharging;

3.Manual control: control the direction button/ pause button/start cleaning;

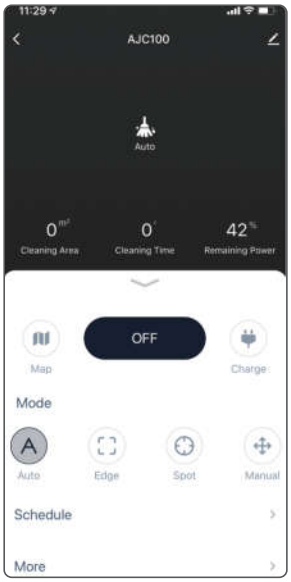

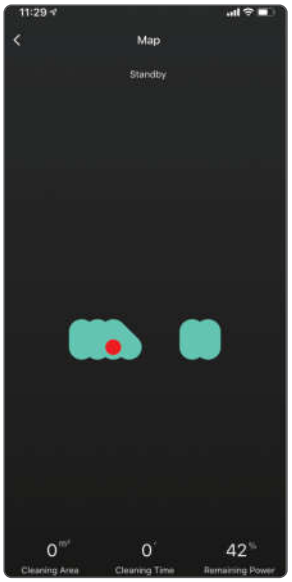

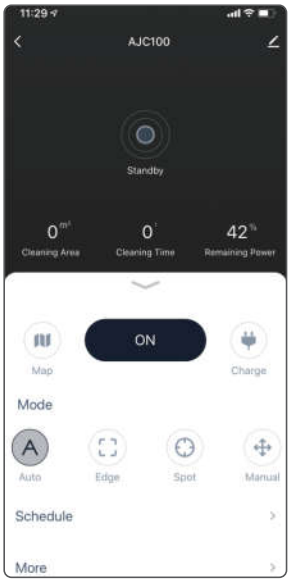

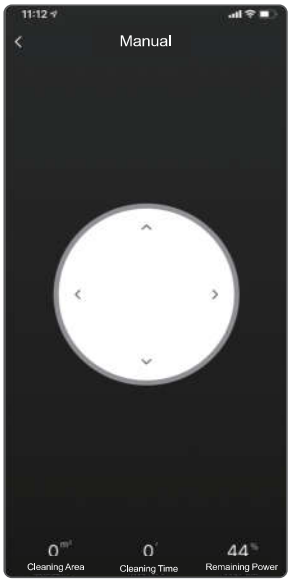

App Instruction

4. Use the app to set start times for scheduled cleanups.
   Select scheduled cleaning and save the scheduled
   Cleaning time

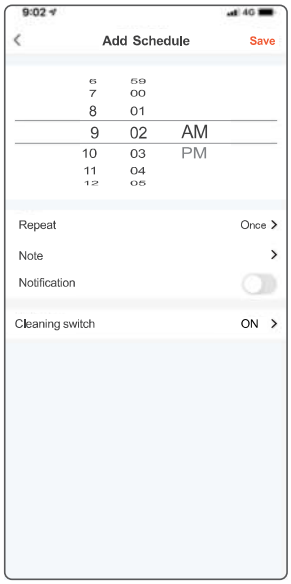

More：

1.Click "More" on the home page to enter more pages.
  and click to enter the corresponding function.

2.Click “seek robot": the robot will voice prompt "I am here";

3.Consumables: side brush, main brush and filter life situations.

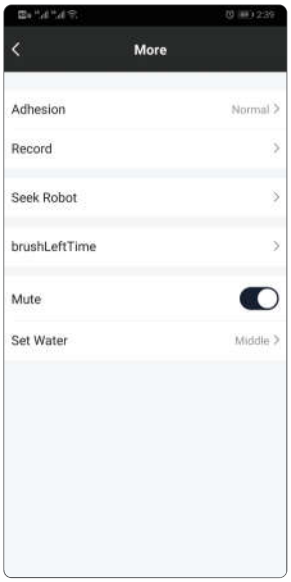

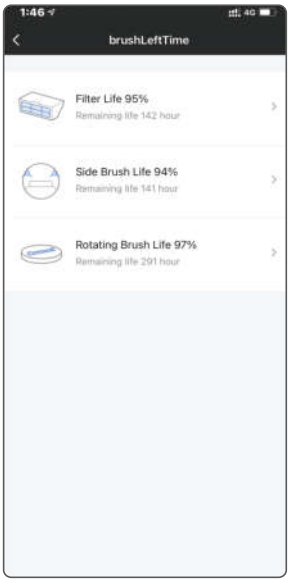

App Instruction

4. Water control flow:Low,Middle,High

5. Suction power: Quiet, Standard, Strong

6.Mute switch: No voice prompt
(except for the voice of finding the robot).

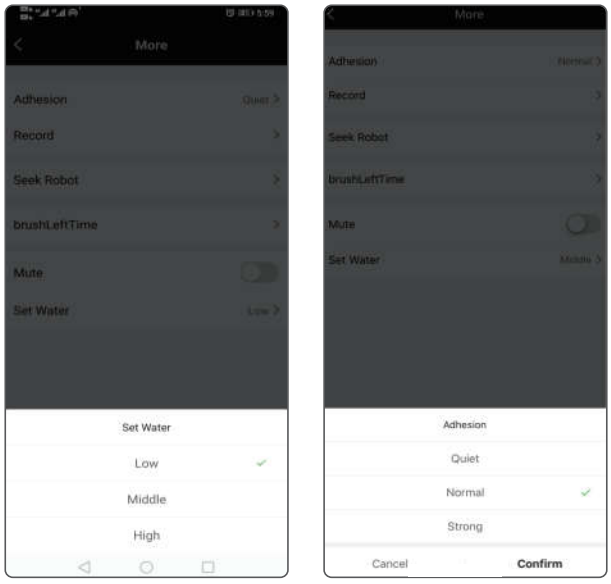

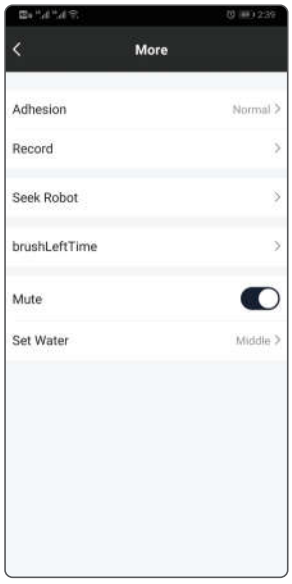

App Instruction

Setting

1. Click the upper right corner on the main control page to enter the robot settings page. And click to enter the corresponding function.

2. Adding share: Enter the robot account to be shared.

3. Remove device: Click ”Remove device” to remove the bound device from this account

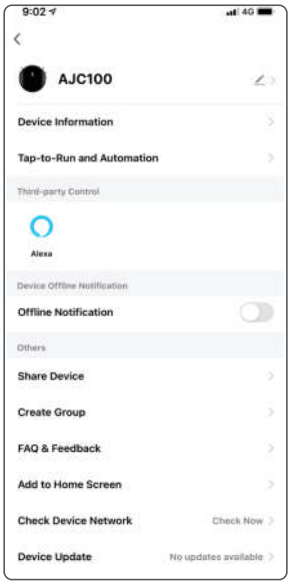

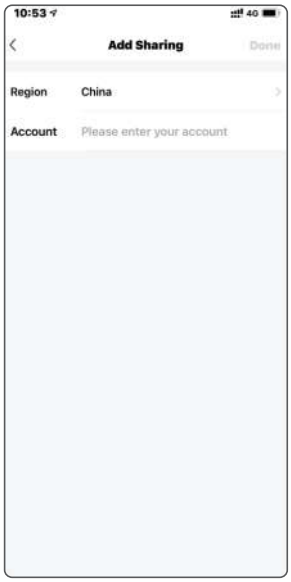

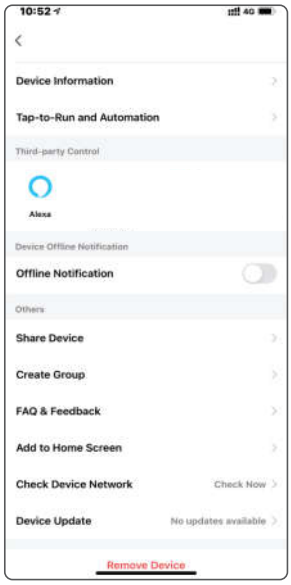

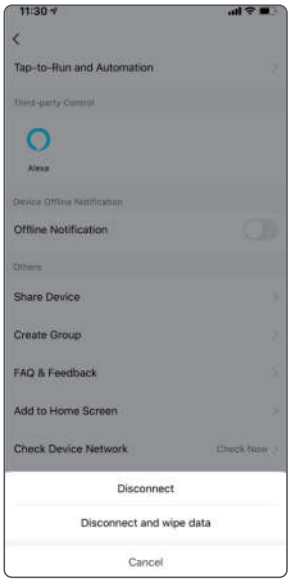

Routine Maintenance

Dust box and filter cleaning

It is recommended to clean the dust box and filter in time

A. Pull out the dust box by pressing the button on the back of robot

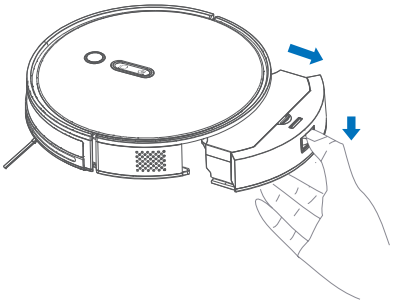

B. Press and hold the button on the dust box to open the dust box and take out the garbage。

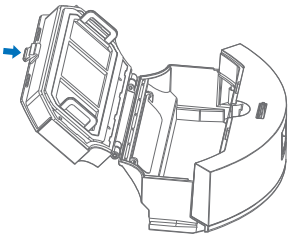

C. Take off the filter and filter foam from inside the dust box. and clean it with a brush or cloth.

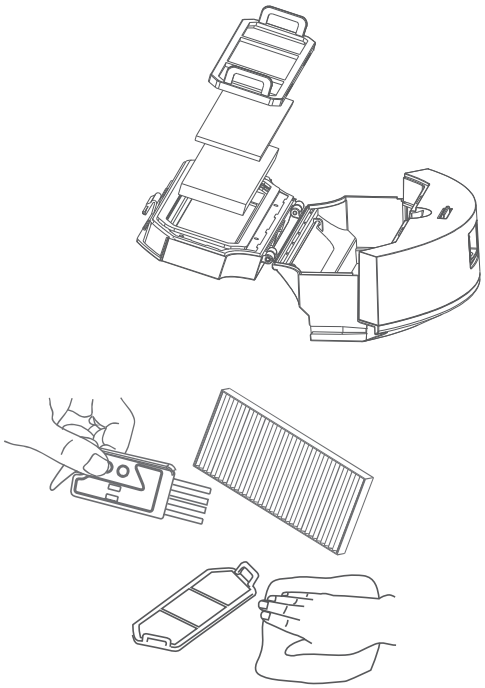

Note: 1.Filter life time is 24 months.
It is recommended to wash it by water per 15-30days

2.After washing, recommended to dry.
Do not squeeze. Do not expose to the sun.

Routine Maintenance

Main brush assembling and cleaning

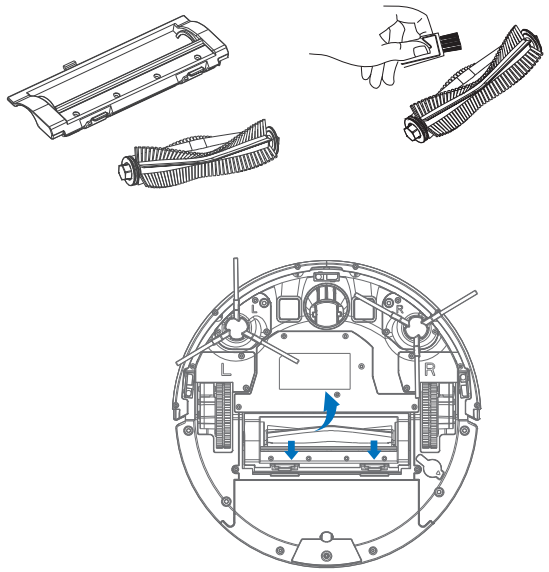

Side brush cleaning

A. Use a brush cleaning tool to cut off the entangled debris.
B. Use a clean cloth to clean the side brush.

Note: Side brush replacement every 3-6 months is recommended to maintain cleaning quality.

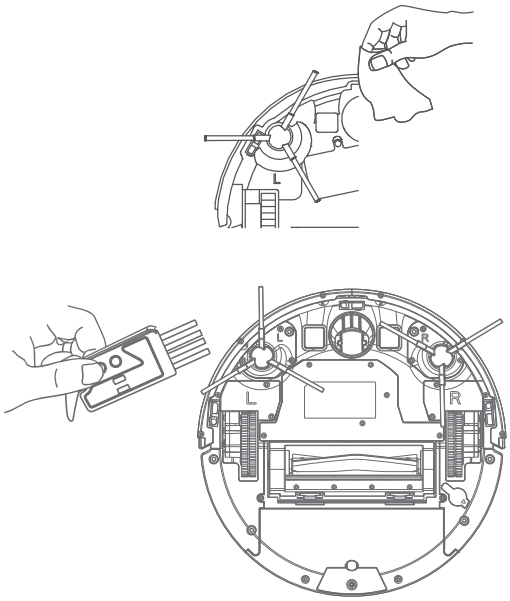

Routine Maintenance

C. When the side brush cannot be used, please remove the damaged side brush and replace it in time

Note: The water temperature must not exceed 60 degrees

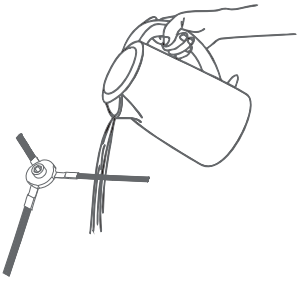

Omnidirectional wheel cleaning

1. Turn the robot over.
2. Pull out the wheel upwards.
3. Reinstall after cleaning and press firmly.
4. Rinse the axle and the wheel with water to remove any hair and dirt.
5. Dry and reinstall the wheel then press it back in place.

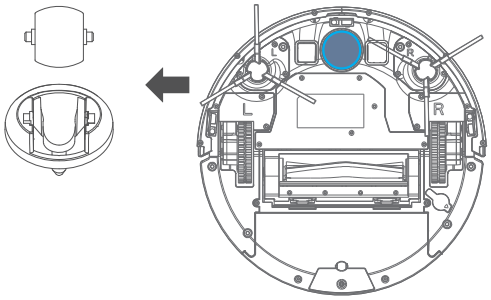

Robot sensor and cleaning

Use a soft dry cloth to clean the sensors.
Note: Do not directly touch the sensors with liquids such as water and thinner.

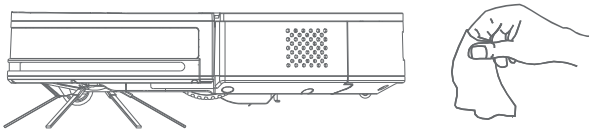

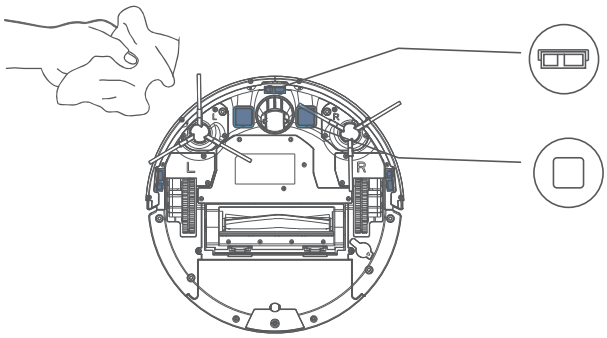

Troubleshooting

Error	Solution
The main brush tangled up	Please clean the rolling brush
The side brush tangled up	Please clean the side brush
A wheel is abnormal and the robot jammed	Please check the driving wheels
The dust box abnormal installation	Please install the dust box
Abnormal cliff sensor/ dirty cliff sensor	Please wipe the cliff sensors
The robot is stuck.	Please clean any obstacle around it
The bumper is stuck	Please check the front bumper
The robot is suspened	Please put the robot back on the ground

FAQs

Problem	Solution
Unable to connect to WiFi	Wifi is disabled. Reset the WiFi and try again. Wifi signal is poor. Make sure that the robot is in a area with good Wifi signal reception Only powered on,simultaneously press spot button and recharging button can be entered distribution network Only 2.4G network supported

FAQs

Problem	Solution
Unable to install the App	IOS9.0, Android 5.0 and above systems, can download and use APP
Unable to charge	If the charging dock is not receiving power, check that both ends of the power cable are properly connected. If contact is poor, clean the contact areas of the charging dock and the robot. Power is restored when the power indicator light turns on.
Difficult to recharge	There are too many obstacles near the charging dock. Move it to an open area. The robot is too far from the charging dock. Place it closer and retry
Poor cleaning ability	It is recommended to clean up the ground debris first. If there is a missing clean, the robot will automatically schedule clean it. Do not interfere with it.
The robot is jammed	The robot will actively try various methods to get rid of jams. Or it is recommended to help manually
Noise during cleaning	The main brush, side brush, or main wheels may jammed. Turn off the robot and clean them. If the omnidirectional wheel is jammed, remove it for cleaning.
Pure suction power	The dust bin is full and needs emptying. The filter is blocked and needs cleaning. The main brush is jammed and needs cleaning Take out filter foam to air dry

Product parameter

Name and content of hazardous substances in the product

Name	Parts					
	Lead (Pb)	Mercury(Hg)	Mercury(Cd)	Hexavalent Chromium (Cr (VI))	Polybrominated Biphenyls (PBB)	Polybrominated Diphenyl Ethers (PBDE)
Circuit	×	○	○	○	○	○
Metal partsw	○	○	○	○	○	○
Plastic Casing	○	○	○	○	○	○
Battery	○	○	○	○	○	○
Other parts	○	○	○	○	○	○

This form is compiled in accordance with the regulations of SJ/T 11364.

○ Means that the content of the hazardous substance in all homogeneous materials of the part is below the limit requirement specified in GB/T 26572.

× Means that the hazardous substance at least in a certain homogeneous material of the part exceeds the limit requirement of GB/T 26572.

FCC Warnning:
This equipment has been tested and found to comply with the limits for a Class B digital device, pursuant
to part 15 of the FCC Rules. These limits are designed to provide reasonable protection against harmful interference in a residential installation. This equipment generates, uses and can radiate radio frequency energy and, if not installed and used in accordance with the instructions, may cause harmful interference to radio communications. However, there is no guarantee that interference will not occur in a particular installation. If this equipment does cause harmful interference to radio or television reception, which can be determined by turning the equipment off and on, the user is encouraged to try to correct the interference by one or more of the following measures:
• Reorient or relocate the receiving antenna.
• Increase the separation between the equipment and receiver.
• Connect the equipment into an outlet on a circuit different from that to which the receiver is connected.• Consult the dealer or an experienced radio/TV technician for help.
Caution: Any changes or modifications to this device not explicitly approved by manufacturer could void your authority to operate this equipment.
This device complies with part 15 of the FCC Rules. Operation is subject to the following two conditions:
(1)This device may not cause harmful interference, and (2) this device must accept any interference
received, including interference that may cause undesired operation.
This equipment complies with FCC radiation exposure limits set forth for an uncontrolled environment. This equipment should be installed and operated with minimum distance 20cm between the radiator and your body.

ISED Statement
- English: This device complies with Industry Canada license-exempt RSS standard(s).
Operation is subject to the following two conditions: (1) This device may not cause interference, a nd (2) This device must accept any interference, including interference that may cause undesired operation of the device.
The digital apparatus complies with Canadian CAN ICES-3 (B)/NMB-3(B).
- French: Le présentappareilestconforme aux CNR d'Industrie Canada applicables aux appareils radio exempts de licence. L'exploitationestautorisée aux deux conditions suivantes: (1) l'appareil ne doit pas produire de brouillage, et (2) l'utilisateur de l'appareildoit accepter tout brouillageradi oélectriquesubi, mêmesi le brouillageest susceptible d'encompromettre le fonctionnement.
l'appareil numérique du ciem conforme canadien peut - 3 (b) / nmb - 3 (b).
This device meets the exemption from the routine evaluation limits in section 2.5 of RSS 102 and compliance with RSS 102 RF exposure, users can obtain Canadian information on RF exposure and compliance.
cet appareil est conforme à l'exemption des limites d'évaluation courante dans la section 2.5 du cnr - 102 et conformité avec rss 102 de l'exposition aux rf, les utilisateurs peuvent obtenir des données canadiennes sur l'exposition aux champs rf et la conformité.
This equipment complies with Canada radiation exposure limits set forth for an uncontrolled environment.
This equipment should be installed and operated with minimum distance 20cm between the radiator & your body.
Cet équipement est conforme Canada limites d'exposition aux radiations dans un environnement non contrôlé.