Product maintenance

Dust box and filter cleaning

It is recommended to clean the dust box and filter in time after each use of the machine

A. Pull out the dust box by pressing the button on the back of the machine

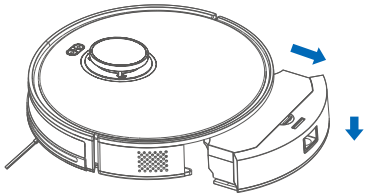

B. Press and hold the button on the dust box to open the dust box and take out the garbage。

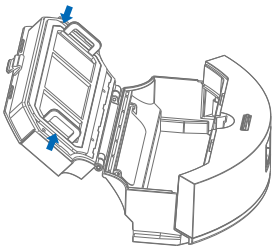

C. Take out the filter filter cotton inside the dust box, and clean it with a brush or cloth.

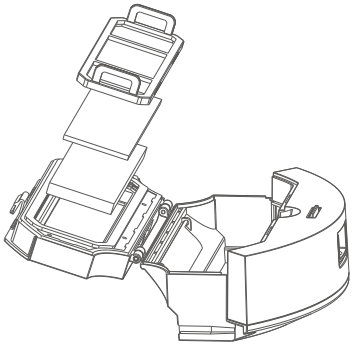

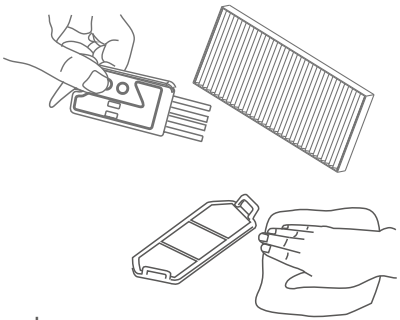

Remark:

1. The life of the filter is about 24 months. It is recommended to wash it with water every 15-30 days.
2. After washing, it is recommended to dry in a cool and ventilated place. Do not squeeze. Do not expose to the sun.

2. Main brush assembling and cleaning

A. Take out the roller brush cover of the dust suction port with the bottom of the machine facing upwards, pull up the roller brush on the right side, and then use the cleaner to clean the entangled hair.

B. After the roller brush is rinsed and dried, align the ports one by one and install them.

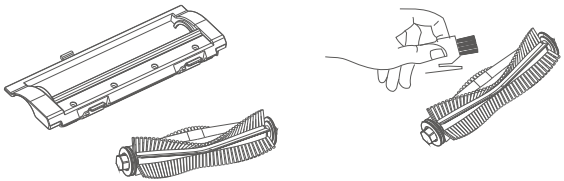

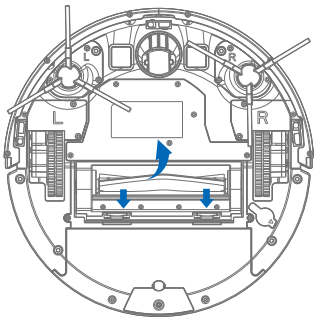

3. Side brush cleaning

A. Use a brush cleaning tool to cut off the entangled debris.

B. Use a clean cloth to clean the side brush.

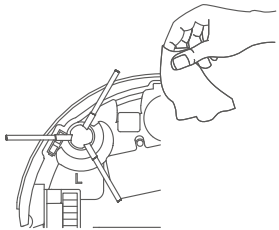

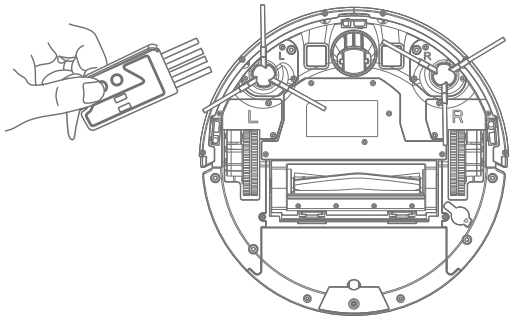

Product maintenance

C. When the side brush is in use, if the side brush is deformed, please remove the side brush and restore it to its original shape with boiling water.

D. When the side brush cannot be used, please remove the damaged side brush and replace it in time

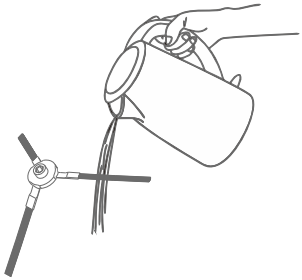

Universal wheel cleaning

Turn the device over, pull out the universal wheel upwards, reinstall it after cleaning, and press it firmly.

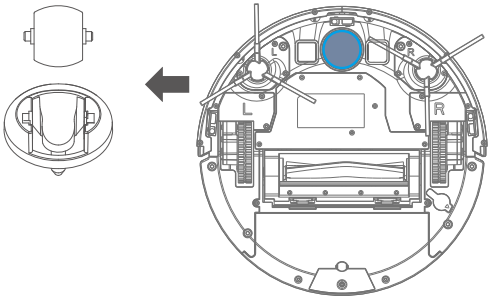

Ensor and charging electrode cleaning

Use a cleaning tool or a rag to clean the device ground sensor, charging pole piece, suction channel opening and charging contacts on the charging stand.

Note: Do not directly touch the sensor with liquids such as water and thinner.

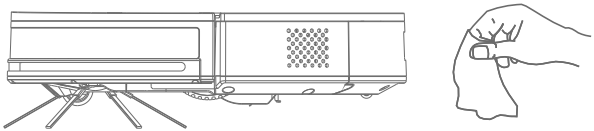

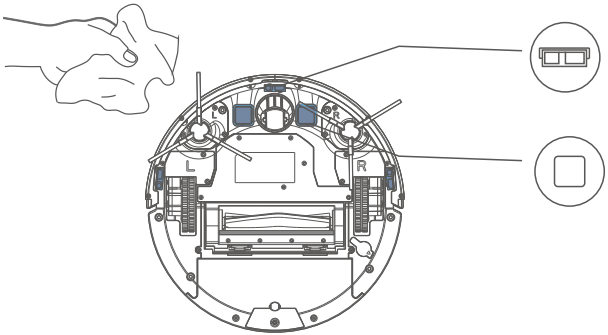

Problem type

No	Fault conditions	Possible reason	Solution
1	Cannot connect to the APP	The router username and password are incorrect.	Configure the router network and make sure that the router "Username" and "Password" are entered correctly.
		The device is not within the network signal coverage of the router.	Ensure that the device is within the network signal coverage of the router.
		Whether the device is in a state to be configured.	The network can only be configured when the host is in the network configuration state. After the device is normally powered on, press and hold the fixed-point button and the recharge button. Then you will hear "Network configuration.please wait for the the network configuration result in the APP interface," it means The device enters the network configuration mode.
		Without 2.4G network.	Please change to 2.4G network
2	Can't install APP	The phone operating system version is too low.	Mobile phones with IOS9.0 and above, Android5.0 and above can download and use the App
3	Can not be charged	The main unit is in poor contact with the charging pole piece of the charging station.	Make sure that the unit and the charging pole piece of the charging station are fully connected. And the indicator light on the charging station is Always on. Check whether the charging pole pieces of the main unit and charging stand are dirty.
		The charging dock is not connected to power.	Connect the charging station power supply in time.
4	Difficult to recharge	The charging stand is not placed correctly.	Please place the charging station on a level ground against the wall. And remove 1 meter on both sides of the charging station .All obstacles of 2 meters, covering the bottom of the reflective objects around the charging station 10cm.
		He charging station is powered off or moved off.	Please check if the charging base is connected to a power source. Do not move the charging stand position artificially.
		The unit is stuck by ground obstacles (such as wires, carpet edges, electric fan base, etc.) or the door of the room with the charging stand is closed. Making it impossible to return to the charging stand.	It is recommended to clean the ground debris and wires before using the machine to avoid being entangled when the main machine is working and unable to get out of the trap and recharge.
		Pause for more than 60 minutes or move more than 1 meter midway.	Please avoid suspension and moving as much as possible. To ensure the smooth operation of the machine. Please let the machine complete the cleaning independently. The pause time should not exceed 60 minutes as much as possible, and the moving distance should not exceed 1 meter
		The unit does not start cleaning from the charging stand.	It is recommended to let the unit start cleaning from the charging station.

Problem type

No	Fault conditions	Possible reason	Solution
5	When the unit is working, there are random deviations of the route, repeated cleaning and the community Domain missed scanning, etc.	Wires, slippers and other objects placed on the ground affect the normal operation of the host.	Please minimize the placement of scattered items on the ground. It is recommended to clean up the ground debris before using the machine. If there is a missing scan, the machine will make up for the leakage. Please don't For interference (such as moving the host or blocking the path of the unit)
		Use the unit in low or no light conditions	It is recommended to use the machine under good light or lighting conditions.
		Working on a newly waxed and polished floor, causing flooding friction between the driving wheel and the ground is reduced.	It is recommended to wait for the floor wax to dry before using it.
		It is possible to caused by driving wheel and the ground slip when the robot vacuum cleaner climbs small steps, thresholds, and door bars, which affects the host's overall impact judgment of the working environment of the housing estate.	It is recommended to close the door of the area and clean the area separately. The device dhas the function of self-identifying single rooms. And it will return to the starting point after cleaning, please rest assured to use.
		Due to different environments unit in individual regions cannot enter Clean up.	It is recommended to tidy up the home environment to ensure that the unit can enter for cleaning.
6	The unit is in trouble while working.	The unit is entangled or obstructed by scattered wires, drooping curtain cloth or carpet fringing on the ground.	The host will try various methods to get out of the trouble. It is recommended to help manually.
		He main unit may be jammed by furniture close to the height of the main unit.	It is recommended to elevate furniture or artificially block it.
7	When the unit is working, the running sound is loud.	Side brushes and roller brushes are entangled, dust box, filter materials are blocked, etc.	It is recommended to clean the dust box in time after each use of the machine; regularly clean and maintain side brushes, roller brushes, dust boxes, filter materials, etc.f
8	The suction power becomes smaller	The suction port is blocked.	Please clean up the dust suction port in time.
		The dust box is full.	Please clean the dust box in time.
		The filter unit is dirty.	Take out the filter cotton and place it in a cool place to air dry.
		The filter cotton is moist.	Take out the filter cotton and place it in a cool place to air dry.

Product parameters

If the above methods cannot solve the problem, you can try the following:

1. Turn on the power switch on the side of the unit again and restart the machine.
2. If the machine keeps moving backwards, please pat the bumper with your hand and restart it.
3. If the machine does not move forward, please check whether the cliff sensor is blocked and lean the dust on the sensor cover.
4. If the problem cannot be solved by restarting, please return the machine to the after-sales service center for repair.

Tips :

1. The visual sweeper has the function of automatically recognizing the direction of the family, and will walk horizontally and vertically during the cleaning process.
2. The visual navigation machine has a repositioning function. When using this function, the machine needs to be paused first and be in the area that has been cleaned, otherwise the positioning will fail.

Complete unit parameters

Name	Parameter
Size	L320*W320*H76mm
voltage	14.8V
ated power	32W
Battery	2500mAh or 3000mAh Li-battery
Charging base Output voltage	19V
Charging base output current	1A

Remark: Storage temperature 0-45℃

Docking station parameters

Name	Parameters
Size	L167*W143*H87mm
Rated input	19.0V ⎓ 1.0A
Rated output	19.0V ⎓ 1.0A
Rated power	50/60Hz

CE RoHS FC

FCC Statement

This equipment has been tested and found to comply with the limits for a Class B digital device, pursuant to part 15 of the FCC Rules. These limits are designed to provide reasonable protection against harmful interference in a residential installation. This equipment generates, uses and can radiate radio frequency energy and, if not installed and used in accordance with the instructions, may cause harmful interference to radio communications. However, there is no guarantee that interference will not occur in a particular installation. If this equipment does cause harmful interference to radio or television reception, which can be determined by turning the equipment off and on, the user is encouraged to try to correct the interference by one or more of the following measures:

- Reorient or relocate the receiving antenna.
- Increase the separation between the equipment and receiver.
- Connect the equipment into an outlet on a circuit different from that to which the receiver is connected.
- Consult the dealer or an experienced radio/TV technician for help.

Caution: Any changes or modifications to this device not explicitly approved by manufacturer could void your authority to operate this equipment.
This device complies with part 15 of the FCC Rules. Operation is subject to the following two conditions: (1) This device may not cause harmful interference, and (2) this device must accept any interference received, including interference that may cause undesired operation.

RF Exposure Information

This equipment complies with FCC radiation exposure limits set forth for an uncontrolled environment. This equipment should be installed and operated with minimum distance 20cm between the radiator and your body.

Product parameter

Name and content of hazardous substances in the product

Name	Parts					
	Lead(Pb)	Mercury(Hg)	Mercury(Cd)	Hexavalent Chromium (Cr(VI))	Polybrominated Biphenyls (PBB)	Polybrominated Diphenyl Ethers (PBDE)
Circuit	×	○	○	○	○	○
Metal partsw	○	○	○	○	○	○
Plastic Casing	○	○	○	○	○	○
Battery	○	○	○	○	○	○
Other parts	○	○	○	○	○	○

This form is compiled in accordance with the regulations of SJ/T 11364.

○ Means that the content of the hazardous substance in all homogeneous materials of the part is below the limit requirement specified in GB/T 26572.

× Means that the hazardous substance at least in a certain homogeneous material of the part exceeds the limit requirement of GB/T 26572.

Warranty Card

Model		
Warranty	Robot vacuum cleaner Date	
User name	User name	
	Add:	
Store	User name	
	Add:	

1. Please keep your product warranty card properly
2. When you need to maintain the product, please fill in the warranty information completely to ensure that the font is neat and clear and easy to identify
3. When you enjoy the after-sales service, please show the product warranty card and related purchase information. For online purchases, please provide the corresponding platform purchase account and enjoy the relevant after-sales service
4. You can call our national after-sales service hotline

Warranty period

Product	Time
Completed unit	1 year
Battery	6 months
Adapter	6 months
Consumables side brush, cleaning brush tool	NO

Warranty principle

1. If the purchased product has quality problems and has not been damaged or repaired, it can be replaced at the point of purchase within 7 days
2. Purchase this product to enjoy free maintenance during the warranty period
3. The repair-free warranty is invalid in the following cases. But repair services are provided. And the corresponding accessories and labor costs will be charged when repairing
   A. The damage caused by human factors. Including the damage caused by using in abnormal working environment, not according to the instructions, etc.
   B. Due to the user's private disassembly, self-maintenance, modification, or non-maintenance of the company's maintenance department
   C. Damage caused by force majeure (such as fire, earthquake, lightning, etc.)
   D. Without product warranty card and valid proof of purchase and unable to verify user information files
   E. Unable to verify the date of purchase