Accurate Positioning

Anchor V2.2

USER MANUAL

v1.3, 2022-03-04

Contents

Contents **2**
1 Foreword **3**
2 Disclaimer **3**
3 Note to Operator **3**
4 Safety **3**
5 About this Manual **4**
5.1 Audience 4
5.2 Copyright 4
5.3 Revision History 4
6 Overview **5**
7 General Technical Specifications **6**
8 Installing the Anchor **6**
8.1 Mounting Anchors 6
8.2 Connecting Cables 8
8.3 Powering the Anchor 9
8.4 Anchor Headers 10
8.4.1 Mounting the IP66/67 header *11*
8.4.2 Mounting the IP20 header *12*
8.5 Best Practices for Anchor Placement 12
8.5.1 Specific guidelines for 2D positioning: *13*
8.5.2 Specific guidelines for 3D positioning: *13*
8.6 Anchor Activation 14
8.6.1 UWB functionality *14*
8.6.2 Bluetooth functionality *14*
9 Troubleshooting **15**
10 FAQ **15**
11 Disposal **16**
12 Regulatory Information **17**
12.1 FCC Compliance Statement 17
12.2 ISED Compliance Statement 17
12.3 CE Compliance Statement 18

1 Foreword

Please read this manual carefully before using the product. Do also read and follow instructions from “operator” or “licensee” applicable to the specific installation.

For best possible performance, continuous satisfactory safe operation, read and understand these instructions thoroughly before operating your equipment.

2 Disclaimer

The information, instruction, and parts listed are applicable and current on the date when issued. Pozyx reserves the right to make changes without prior notice.

3 Note to Operator

It is the operator’s responsibility to see that any person involved with the use or operation of this equipment follows all safety and operational instructions. Under no circumstances should this equipment be used if the equipment is faulty or the operator does not completely understand the operation of the equipment.

4 Safety

All Pozyx equipment should be used with the greatest care and in accordance with all local safety regulations. It is prohibited to modify, open up, replace or exchange parts, change factory settings or perform any other action on Pozyx equipment that deviates from the way it was delivered. Doing so may present a hazard and will void any warranties.

Under no circumstances can Pozyx be held liable in any way shape or form for any defects, damages, injuries, direct or indirect, that are the result of handling, using, installing or any other use of the equipment and failure to observe all necessary safety guidelines.

5 About this Manual

5.1 Audience

This manual is intended for users of the Anchor in conjunction with the Pozyx Enterprise System. Any other use outside of the system is deemed incompliant and will void any warranties of the anchor, tag, system, or any Pozyx hardware.

5.2 Copyright

All rights reserved. No part of this document may be reproduced or transmitted in any way or shape be it, electronic, mechanical, photocopying, recording, or otherwise, without the express prior written permission of the publisher.

For information on getting permission for reprints and excerpts, contact POZYX NV. The content and illustrations are subject to change without prior notice.

5.3 Revision History

Release Date	Revision	Remarks
2022-01-25	1.0	*Initial release*
2022-02-25	1.1	*Update of regulatory information*
2022-03-01	1.2	*Update of the ISED regulatory information*
2022-03-04	1.3	*Update of the FCC regulatory information*

6 Overview

The Pozyx Anchor **captures, preprocesses, and sends location data from tags** to a Gateway. It has been designed for optimal Ultra-Wideband performance and comes with robust casing options (IP20 or IP66-67), making it ideal for industrial environments. Mounting the Anchor is straightforward with the help of three mounting brackets.

The Anchor works within the **Pozyx Enterprise system** and requires an infrastructure of Tags, Anchors, switches, and a Gateway to accurately and correctly translate positions in a stream of real-time coordinates.

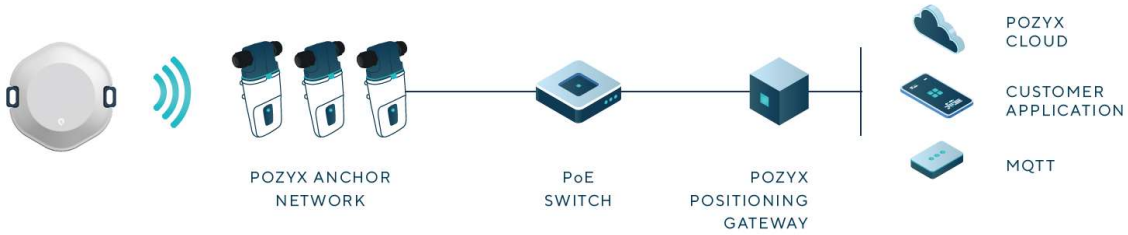

Figure 1 Pozyx Enterprise System Architecture

The Pozyx architecture comprises three main parts:

- A **network of anchors and tags**. This network consists of two types of devices: tags and anchors. The tag is a *mobile* device used to track the positions of an asset or person in real time. An anchor is a signal capturing device on a *fixed*, well-known position.
- A **local gateway**. This device is the positioning server and connects to the Anchors via Ethernet. It gathers all the data received from the Anchors and transforms it into a position. By connecting to the gateway, users can receive the real-time positioning data.
- The Pozyx **web application**. The web application is a visual interface to configure and manage the Pozyx system. It can be run locally from the gateway itself or from the Pozyx cloud.

7 General Technical Specifications

For extensive technical specifications, please consult the **Pozyx Anchor Datasheet**.

Parameter	Information
UWB channels	Channel 5, Channel 2 (for FCC and licensed customers in Europe)
Bluetooth	Bluetooth Low energy V5.1
Sensors	Acceleration, Pressure, Supply Voltage, Temperature
Power supply	POE/POE+ or DC: 6 to 53V, 4.5W max
Dimensions	157 x 98 x 53 mm
Weight	170 g
Ingress protection	IP20 or IP66/67 (with add-on header)
Operating conditions	-25 °C to +55 °C
Storage conditions	-40 °C to +70 °C

8 Installing the Anchor

8.1 Mounting Anchors

Mountain brackets allow users to install the Pozyx Anchors security to a wall or ceiling. Three types of mounting brackets are available to mount an Anchor:

- VESA pole mount (90-020-0001)

- VESA wall mount (90-020-0002)

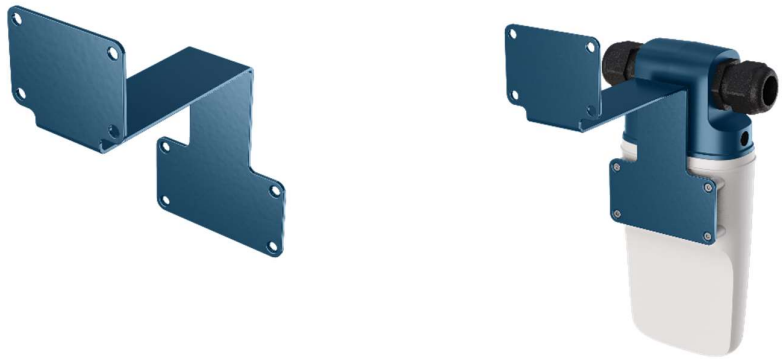

- VESA ceiling mount (90-020-0003)

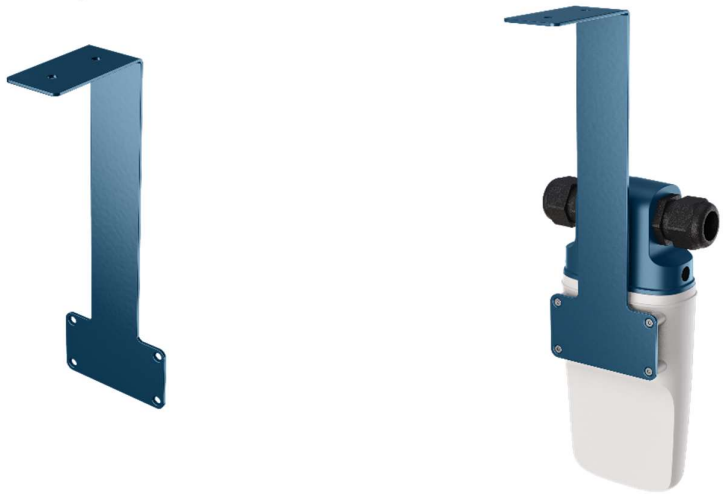

The Anchor is mounted with **4 M4 screws** on the mounting bracket.

8.2 Connecting Cables

Pozyx Anchors can be connected through Ethernet. Each Anchor has 2 RJ45 100Base-T ports. They can be used to link up anchors in sequence which reduces the total amount of wiring required. We call this Daisy Chaining of Anchors.

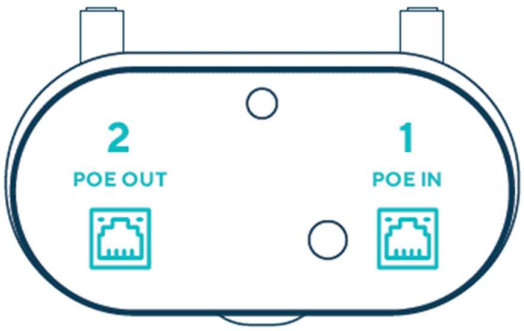

Figure 2 Pozyx Anchor PoE ports

- The port labeled "**1**"should be connected to the Positioning Gateway. This can implemented either by a direct connection to one of the Anchor ports on the gateway or by a connection through an Ethernet switch for large setups.
- The port labeled "**2**"can be used to connect Anchors in a daisy-chain.

To create a chain of Anchors connect the port "2" (OUT in the figure below) of an Anchor to the port "1" (IN in the figure below) of the next Anchor in the chain.

Pozyx recommends using Ethernet cables that:

- Are Pure Copper (Cu). Do not use Copper Clad Aluminum (CCA)
- Are Shielded Foil Twisted Pair (S/FTP)
- Are Cat5e (or better)
- Are AWG24 (or better). Both AWG 24/1 and AWF24/7 are suited.

Warning: It is advised not to use crossover Ethernet cables: all Ethernet cables should use the T568B wiring specified in the TIA/EIA-568 standard.

Warning: For system stability it is advised to connect only anchors (and network switches solely used to aggregate Anchors) to the ports labeled "Anchor network" on the gateway.

8.3 Powering the Anchor

There are two options to power an Anchor:

- Using **Power-Over-Ethernet (PoE/PoE+)**. This option requires an Ethernet switch with PoE capability is placed between the gateway and the first Anchor in a daisy-chain. Each Anchor will provide power on the outgoing Ethernet cable for the next Anchors in the chain. The Ethernet cable that provides power to the Anchor must be connected to the port labeled "1".

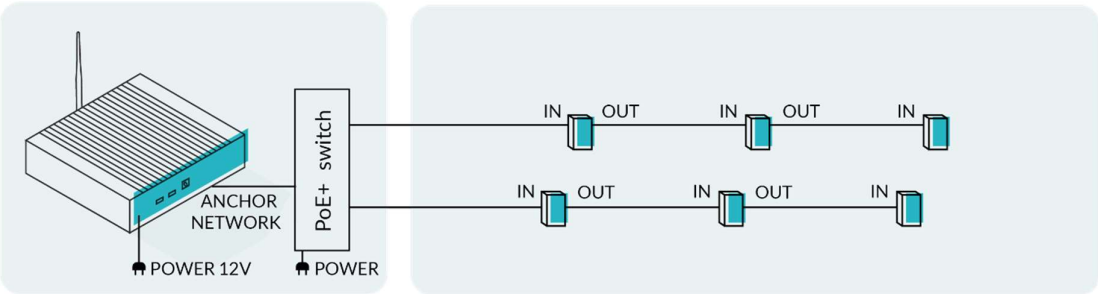

Remark: In general, **4-5 anchors** (depending on the installation setup and environment and taking the conditions into consideration) is the maximum for a chain when powered through a PoE Switch, more will cause networking issues. Be sure to use shielded Ethernet cables to eliminate cross talk.

- **Local DC jack**: This option uses an external AC/DC convertor to power the first Anchor in a daisy-chain.

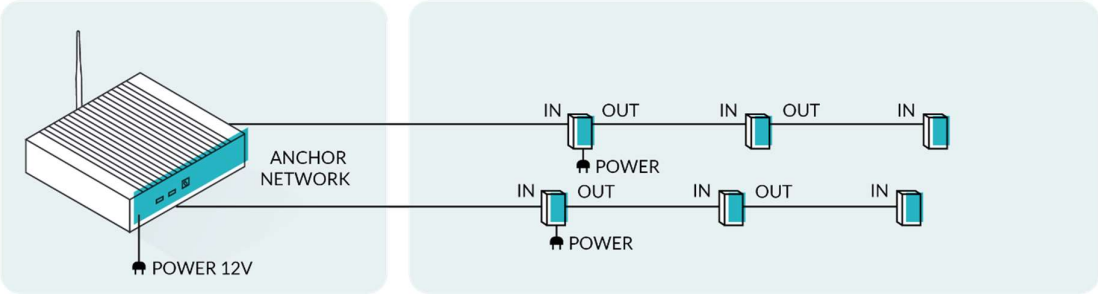

Warning: It is not allowed to power an Anchor through the Ethernet Port 2.

Warning: Make sure that you use the correct ports to connect the incoming and outgoing Ethernet cables on the anchor.

8.4 Anchor Headers

Two types of headers are available for the Anchor:

- The header 90-010-0101 provides **IP66 and IP67 ingress protection** to the Anchor. The Ethernet cables enter the Header sideways.

- The header 90-011-0001 can optionally be used to guide the external cables. The ingress protection level of this solution is **IP20**. The header allows users to route the cabling upwards from or to the backside of the Anchor.

8.4.1 Mounting the IP66/67 header

1. Place the RJ 45 connector on the Ethernet cable according to the T568B convention when using an Ethernet cable without pre-confectioned connectors.

Warning: Make sure that the RJ45 connectors are suited for the deployed Ethernet cable.

2. Place the Tightening nut over the Ethernet cable.

3. Place the grommets over the Ethernet cable.

4. Pull the Ethernet cable thru the cable glands.

5. Plug the Ethernet connectors into the correct RJ45 jack. Route the Ethernet cables in a crossed way inside the cover as illustrated below.

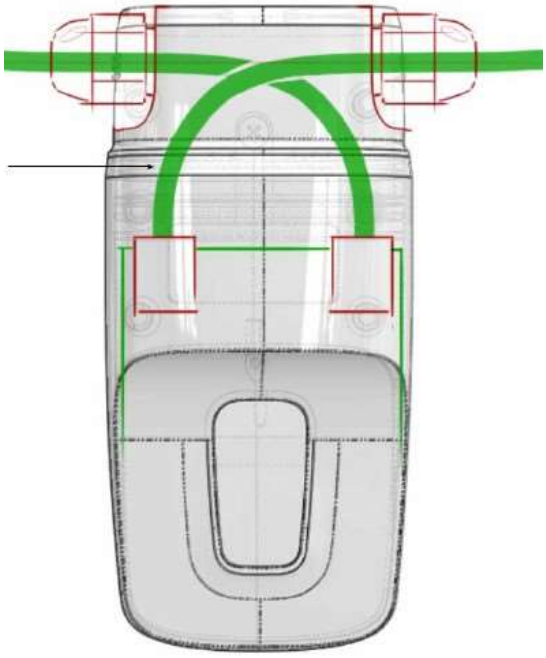

Figure 3 Anchor Ethernet cable connection

6. Apply the provided lubricant on the O-rings of the IP66/67 header.

Warning: Use only lubricants based on silicone or PTFE.

7. Push the IP66/67 header onto the Anchor base module, until the clips snap on the base module.

8. Push the grommets in the cable glands.

9. Screw the tightening nut onto the cable glands until fixed. The maximum torque is 6.0 Nm.

If the header needs to be unmounted, follow the above steps in reverse order.

Warning: To provide IP66/67 protection, the diameter of the Ethernet cables must be tailored to the grommets provided with the header. The standard cable diameter should be 7 mm ±10%. Contact Pozyx for other options.

Warning: Make sure that the blind grommet, that is provided with the IP66/67 header, is placed in the right side cable gland if the Anchor is the last in an Anchor daisy-chain.

8.4.2 Mounting the IP20 header

To mount the IP20 header follow the steps below:

1. Place the RJ45 connector on the Ethernet cable according to the T568B convention when using an Ethernet cable without pre-confectioned connectors.

Warning: Make sure that the RJ45 connectors are suited for the deployed Ethernet cable.

2. Pull the Ethernet cables and the DC power cable (if used) through the appropriate holes in the header. Make sure that the cables will not cross after mounting the header on the Anchor base module.

3. Plug the Ethernet connectors into the correct RJ45 jack. When used, also plug the DC plug into the DC Jack of the Anchor

4. Push the header onto the Anchor base module.

5. Push the cable into the top or rear exit holes in the header.

6. Readjust the header if it moved during Step 5.

8.5 Best Practices for Anchor Placement

For the most accurate positioning the following generic guidelines apply:

- The Anchors should have **line-of-sigh**t to each other.
- An Anchor should be placed each 10 m (1 anchor/100 m^2). However, this can vary depending on the environment. In some occasions it can be more or fewer, but we recommend a maximum anchor separation of 20 m.

- A tag should be **surrounded by anchors in all directions**. This can be achieved by placing an Anchor in each corner of the room in which tags are to be positioned.

8.5.1 Specific guidelines for 2D positioning:

- **Place the anchors high and in line-of-sight of the user.**
  Placing the anchor high (on the ceiling or on the walls) increases the chance of receiving a good signal because there are fewer obstructions. Obstructions generally have a negative influence on the accuracy of the range measurements which has a direct effect on the positioning accuracy.
- **Spread the anchors around the user. Don't place them on a straight line.**
  For range-based systems, a single range measurements will only give information in a single direction. This direction is exactly the direction from the user to the anchor. Because of this, it is best to spread the anchors such that they cover all directions. If the anchors are all on a straight line, the positioning error will (can?) be very large: A small change in radius (for example due to noise), will result in a very large change in the position of the intersection(s).
- **Make sure each anchor sees at least two, but preferably more neighboring anchors** at a distance of not more than 20 to 30 meters, or even less in environments with many obstacles
- **Place anchors vertically, with the connectors at the top.** This keeps the antenna at the bottom
- **Materials like metal, water and wires should stay away from the anchors**, especially the antenna: Within a few centimeters from the antenna, there should be no metal at all, not even small screws.
- **It is recommended to have a separation of 20 cm between the anchor and walls**. Extra mounting equipment can be used to achieve this.

8.5.2 Specific guidelines for 3D positioning:

- **Keep to the guidelines from above but place anchors at different heights:**
  The accuracy of the z coordinate will highly depend on the spread in heights of your anchors. Ideally, it is advised to place your anchors in the shape of a cube around your positioning zone as shown below. Try to maximize the distance between the lower and higher anchors.

- **Twist the base surface of your cube 45 degrees as compared to the top surface:**

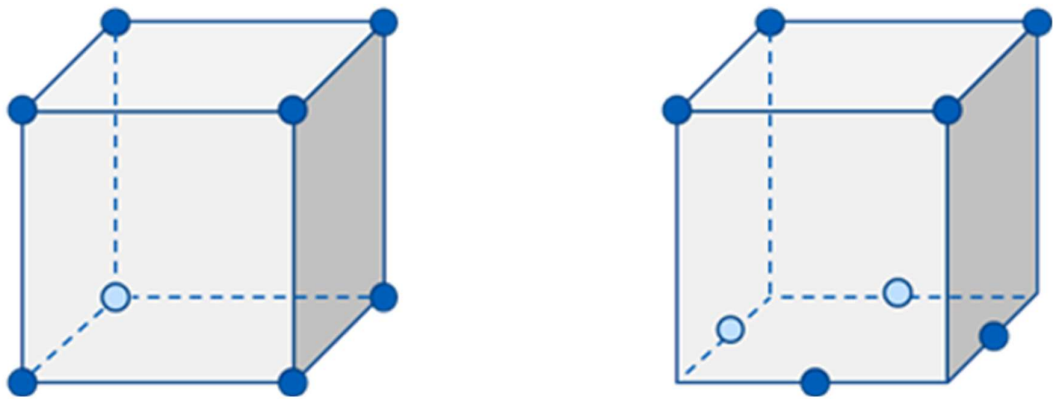

- **Keep the same max distance between the anchors** as for 2D positioning (10 to 20 m depending on the environment)
- With only 6 anchors, it is possible that the resulting positions will be noisier. The recommendation in this case is to place 3 anchors in the top surface and 3 in the bottom surface

Always check https://docs.pozyx.io/enterprise/Installing-the-anchors for the latest guidelines.

8.6 Anchor Activation

8.6.1 UWB functionality

The general description of the Anchor setup and configuration and as part of a positioning system can be found at https://docs.pozyx.io/enterprise/Installing-the-anchors.

8.6.2 Bluetooth functionality

The purposes of the Bluetooth functionality of the Anchor are:

- Data offload from the tags
- Firmware upgrade of the tags
- Tag configuration

The Bluetooth functionality is controlled by the Gateway in the positioning system. More detailed information can be found at https://docs.pozyx.io/enterprise/Installing-the-anchors.

9 Troubleshooting

The Anchor has a LED with 3 color options with the following state indications:

Parameter	Information
LED off	Anchor powered off or general malfunction
Solid blue	Startup or Maintenance mode
Solid red	No Ethernet link
Blinking orange	Link on Ethernet interface established
Solid orange	IP address obtained
Blinking Green	Anchor operational, no UWB activity present
Solid Green	Anchor operational, UWB activity present
Blinking red	General malfunction
Blinking blue	Pozyx reserved mode

10 FAQ

11 Disposal

When the product reaches end of life, dispose it properly in accordance with local laws and regulations.

Disposal of the packaging material
(EU directive 94/62/EC on packaging and packaging waste)
This marking indicates that the product's packaging material can be recycled.

Disposal of this product

(EU directive 2012/19/EU on Waste Electrical & Electronic Equipment)
This marking on the product, accessories or literature indicates that the product and its electronic accessories (e.g. AC/DC convertors) should not be disposed of with other household waste at the end of their working life. To prevent possible harm to the environment or human health from uncontrolled waste disposal, please separate these items from other types of waste and recycle them responsibly to promote the sustainable reuse of material resources.
Household users should contact either the supplier where they purchased this product, or their local government office, for details of where and how they can take these items for environmentally safe recycling.
Business users should contact their supplier and check the terms and conditions of the purchase contract. This product and its electronic accessories should not be mixed with other commercial wastes for disposal.

Please contact the local municipal office for information on the nearest recycling station.

12 Regulatory Information

12.1 FCC Compliance Statement

This device complies with Part 15 of the FCC Rules:
Operation is subject to the following conditions:

1. This device may not cause harmful interference, and
2. This device must accept any interference received, including interference that may cause undesired operation.

CAUTION: Changes and Modifications not expressly approved by Pozyx NV can void your authority to operate this equipment under Federal Communications Commission rules.

NOTE: This equipment has been tested and found to comply with the limits for a Class B digital device, pursuant to Part 15 of the FCC Rules. These limits are designed to provide reasonable protection against harmful interference in a residential environment. This equipment generates, uses and can radiate radio frequency energy and, if not installed and used in accordance with the instructions, may cause harmful interference to radiocommunications. However, there is no guarantee that interference will not occur in a particular installation. If this equipment does cause harmful interference to radio or television reception, which can be determined by turning the equipment off and on, the user is encouraged to try to correct the interference by one or more of the following measures:

- Reorient or relocate the receiving antenna.
- Increase the separation between the equipment and receiver.
- Connect the equipment into an outlet on a circuit different from that to which the receiver is connected.
- Consult the dealer or an experienced radio/TV technician for help.

Operation of this equipment in a residential area is likely to cause harmful interference in which case the user will be required to correct the interference at his own expense.

This device is in compliance with part 15.517 of the FCC Rules. This equipment may only be operated indoors. Operation outdoors violates 47 U.S.C. 301 and could subject the operator to serious legal penalties.

Radiation Exposure Statement
The device complies with the requirements set forth in CFR 47 Sections 2.1091 for an uncontrolled environment. The antennas used for this transmitter must be installed to provide a separation distance of at least 20 cm from all persons and must not be co-located or operating in conjunction with any other antenna or transmitter.

12.2 ISED Compliance Statement

This device contains license-exempt transmitter(s)/receiver(s) that comply with Innovation, Science and Economic Development Canada's license-exempt RSS(s). Operation is subject to the following two conditions:

- This device may not cause interference.

- This device must accept any interference, including interference that may cause undesired operation of the device.

L'émetteur/récepteur exempt de licence contenu dans le présent appareil est conforme aux CNR d'Innovation, Sciences et Développement économique Canada applicables aux appareils radio exempts de licence. L'exploitation est autorisée aux deux conditions suivantes:

1. L'appareil ne doit pas produire de brouillage;
2. L'appareil doit accepter tout brouillage radioélectrique subi, même si le brouillage est susceptible d'en compromettre le fonctionnement.

Caution: Changes or modifications not expressly approved by the party responsible for compliance could void the user's authority to operate the equipment.

Radiation Exposure Statement
The device has been found to be compliant to the requirements set forth in Industry Canada RSS-102 for an uncontrolled environment. The antenna(s) used for this transmitter must be installed to provide a separation distance of at least 20 cm from all persons and must not be co-located or operating in conjunction with any other antenna or transmitter.

12.3 CE Compliance Statement

The manufacturer, Pozyx NV, Vrijdagmarkt 10/201, 9000 Gent, Belgium declares that the product:

- 10-002-0022: Pozyx Anchor V2.2 with BLE

is conform to the following Directives:
2014/53/EU (Radio Equipment Directive)
2011/65/EU (ROHS), amended by 2017/2102/EU and 2015/863/EU

See the Declaration of Conformity for full details on the applied standards.

END OF DOCUMENT