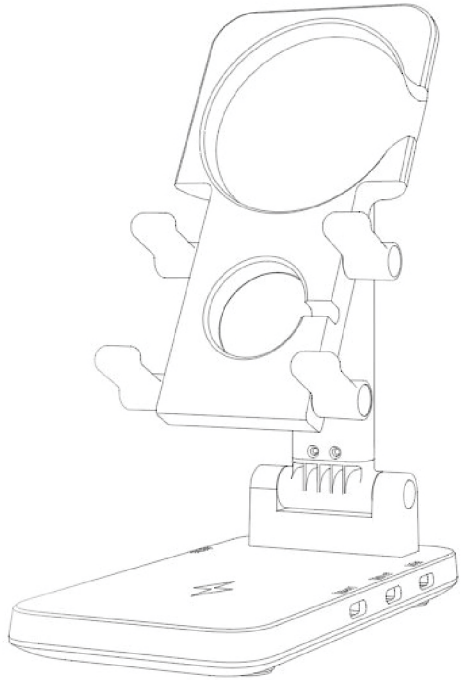

User Manual

PRODUCT INSTRUCTIO

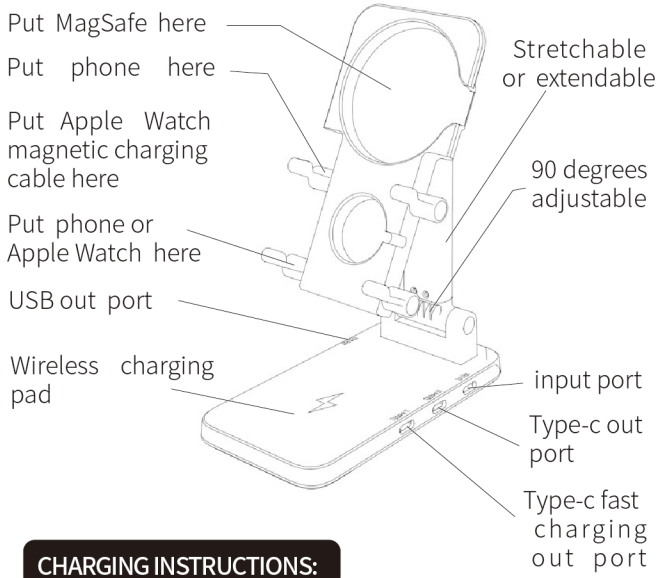

CHARGING INSTRUCTIONS:

- Please use the relevant PD charger with the item sent together.
- Type-c1(Fast Charging) Port support 18W maximum output.
- Type-c2 (Slow Charging) Port+USB 10W maximum output.
- Wireless Charging Pad support 15W maximum output.

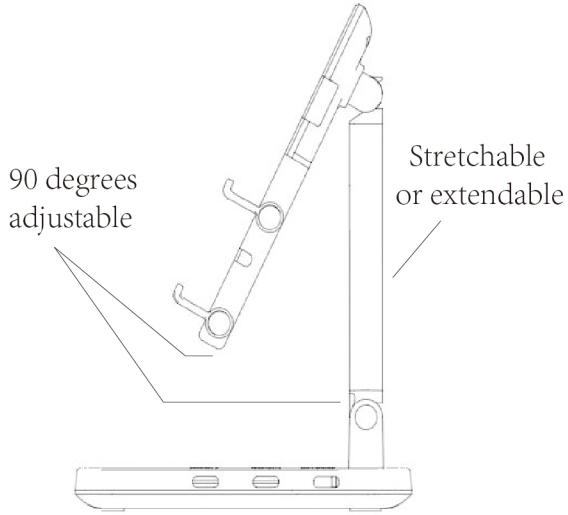

The product is 4in1 multifunctional wireless charging phone stand,5cm stretchable up and down,90 degree angles adjustable to meet the viewing requirements.It' s magnetic charging for MagSafe and Apple Watch,wireless charging for the stand pad,Type-c1(-Fast Charging) Port support 18W maximum output.

NOTE: This equipment has been tested and found to comply with the limits for a Class B digital device, pursuant to part 15 of the FCC Rules. These limits are designed to provide reasonable protection against harmful interference in a residential installation. This equipment generates uses and can radiate radio frequency energy and, if not installed and used in accordance with the instructions, may cause harmful interference to radio communications. However, there is no guarantee that interference will not occur in a particular installation. If this equipment does cause harmful interference to radio or television reception, which can be determined by turning the equipment off and on, the user is encouraged to try to correct the interference by one or more of the following measures:

- Reorient or relocate the receiving antenna.

- Increase the separation between the equipment and receiver.

-Connect the equipment into an outlet on a circuit different from that to which the receiver is connected.

-Consult the dealer or an experienced radio/TV technician for help.

Changes or modifications not expressly approved by the party responsible for compliance could void the user's authority to operate the equipment.

This device complies with Part15 of the FCC Rules. Operation is subject to the following two conditions:

(1) this device may not cause harmful interference, and

(2) this device must accept any interference received, including interference that may cause undesired operation.

RF Exposure Warning Statements:

This equipment complies with FCC radiation exposure limits set forth for an uncontrolled environment. This equipment shall be installed and operated with minimum distance 20cm between the radiator & body.