FCC Test Report

Report No: FCS202101008W01

Issued for

Applicant:	Paradise Digital Technology (shenzhen) Limited
Address:	Suite 501,5/F,SKYWORTH mansion NO.008 Gaoxin Nandao Science Park Nanshan District,Shenzhen
Product Name:	MedicTec AI Watch
Brand Name:	MedicTec
Model Name:	WA002
Series Model:	WA001,WA003,BO001,BO002,BO003,shouwangzhe-1, shouwangzhe-2,shouwangzhe-3,shouwangzhe-4
FCC ID:	2AYQ5-WA002

Issued By: Flux Compliance Service Laboratory
Add: Room 105 Floor Bao hao Technology Building 1 NO.15 Gong ye West Road Hi-Tech Industrial, Song shan lake Dongguan
Tel: 769-27280901 Fax:769-27280901 http://www.fcs-lab.com

TEST RESULT CERTIFICATION

Applicant's Name..... :	Paradise Digital Technology (shenzhen) Limited
Address..... :	Suite 501,5/F,SKYWORTH mansion NO.008 Gaoxin Nandao Science Park Nanshan District,Shenzhen
Manufacture's Name..... :	Paradise Digital Technology (shenzhen) Limited
Address..... :	Suite 501,5/F,SKYWORTH mansion NO.008 Gaoxin Nandao Science Park Nanshan District,Shenzhen

Product Description

Product Name..... :	MedicTec AI Watch
Brand Name .....:	MedicTec
Model Name..... :	WA002
Series Model.....:	WA002,WA003,BO001,BO002,BO003,shouwangzhe-1, shouwangzhe-2,shouwangzhe-3,shouwangzhe-4
Test Standards..... :	FCC Rules and Regulations Part 15 Subpart C, Section 249
Test Procedure..... :	ANSI C63.10:2013

This device described above has been tested FCS, the test results show that the equipment under test (EUT) is in compliance with the FCC requirements. And it is applicable only to the tested sample identified in the report.
This report shall not be reproduced except in full, without the written approval of FCS, this document may be altered or revised by FCS, personal only, and shall be noted in the revision of the document..

Date of Test..... :

Date (s) of performance of tests. :	06 Jan, 2021 ~ 14 Jan, 2021
Date of Issue.....:	14 Jan, 2021
Test Result.....:	Pass

Tested by : Scott Shen

(Scott Shen)

Reviewed by : Duke Qian

(Duke Qian)

Approved by :

(Kait Chen)

Table of Contents **Page**

1. SUMMARY OF TEST RESULTS **5**
- **1.1 TEST FACTORY** 6
- **1.2 MEASUREMENT UNCERTAINTY** 6

2. GENERAL INFORMATION **7**
- **2.1 GENERAL DESCRIPTION OF THE EUT** 7
- **2.2 DESCRIPTION OF THE TEST MODES** 9
- **2.3 DESCRIPTION OF NECESSARY ACCESSORIES AND SUPPORT UNITS** 10
- **2.4 EQUIPMENTS LIST** 11

3 CONDUCTED EMISSION MEASUREMENT **12**
- **3.1 LIMIT** 12
- **3.2 TEST PROCEDURE** 12
- **3.3 TEST SETUP** 13
- **3.4 TEST RESULTS** 14

4. RADIATED EMISSION MEASUREMENT **17**
- **4.1 LIMIT** 17
- **4.2 TEST PROCEDURE** 18
- **4.3 TEST SETUP** 19
- **4.4 TEST RESULTS** 20

5. BAND EDGE TEST **26**
- **5.1 LIMIT** 26
- **5.2 TEST PROCEDURE** 26
- **5.3 TEST SETUP** 27
- **5.4 TEST RESULTS** 28

6. 20 DB BANDWIDTH TEST **31**
- **6.1 LIMIT** 31
- **6.2 TEST PROCEDURE** 31
- **6.3 TEST SETUP** 31
- **6.4 TEST RESULTS** 32

7. ANTENNA REQUIREMENT **34**
- **7.1 STANDARD REQUIREMENT** 34
- **7.2 EUT ANTENNA** 34

Revision History

Rev.	Issue Date	Effect Page	Contents
00	14 Jan, 2021	All	Initial Issue

1. SUMMARY OF TEST RESULTS

FCC Part 15.249,Subpart C			
Standard Section	Test Item	Judgment	Remark
15.207	Conducted Emission	PASS	--
15.205(a), 15.209(a), 15.249(a), 15.249(c)	Radiated Spurious Emission	PASS	--
15.209	Field strength of fundamental	PASS	
15.249(d)	Band Edge Emission	PASS	--
15.215(c)	20dB Bandwidth	PASS	--
15.203	Antenna Requirement	PASS	--

NOTE:

(1)" N/A" denotes test is not applicable in this Test Report

(2) All tests are according to ANSI C63.10-2013

1.1 TEST FACTORY

Company Name:	Flux Compliance Service Laboratory
Address:	Room 105 Floor Bao hao Technology Building 1 NO.15 Gong ye West Road Hi-Tech Industrial, Song shan lake Dongguan
Telephone:	+86-769-27280901
Fax:	+86-769-27280901
FCC Test Firm Registration Number: 514908 Designation number: CN0127 A2LA accreditation number：5545.01	

1.2 MEASUREMENT UNCERTAINTY

The reported uncertainty of measurement **y ±U**, where expended uncertainty **U** is based on a standard uncertainty multiplied by a coverage factor of **k=2**, providing a level of confidence of approximately **95** %.

No.	Item	Uncertainty
1	RF output power, conducted	±0.71dB
2	Unwanted Emissions, conducted	±2.98 dB
3	Conducted Emission (9KHz-150KHz)	±4.13 dB
4	Conducted Emission (150KHz-30MHz)	±4.74 dB
5	All emissions,radiated(<1G) 30MHz-1000MHz	±3.2 dB
6	All emissions,radiated (1GHz -18GHz)	±3.66 dB
7	All emissions,radiated (18GHz -40GHz)	±4.31 dB

2. GENERAL INFORMATION

2.1 GENERAL DESCRIPTION OF THE EUT

Product Name	MedicTec AI Watch
Trade Name	MedicTec
Model Name	WA002
Series Model	WA001,WA003,BO001,BO002,BO003,shouwangzhe-1, shouwangzhe-2,shouwangzhe-3,shouwangzhe-4
Model Difference	The above product with same circuit, PCB layout, electrical parts, materials and wiring structures, Appearance shape, the materials of decorative accessories is same, only different color.
Channel List	Please refer to the Note 2.
BT	Frequency:2402-2480MHz Modulation: GFSK Data rate: 1Mbps Channel number: 40CH
Power Supply	Input：DC 5V,1A Output: DC 3.7V
Hardware version number	V1.0
Software version number	V1.0
Connecting I/O Port(s)	Please refer to the User's Manual

Note:

1. For a more detailed features description, please refer to the manufacturer’s specifications or the User's Manual.

2. **Channel List**

Channel	Freq.(MHz)	Channel	Freq.(MHz)	Channel	Freq.(MHz)	Channel	Freq.(MHz)
1	2402	11	2422	21	2442	31	2462
2	2404	12	2424	22	2444	32	2464
3	2406	13	2426	23	2446	33	2466
4	2408	14	2428	24	2448	34	2468
5	2410	15	2430	25	2450	35	2470
6	2412	16	2432	26	2452	36	2472
7	2414	17	2434	27	2454	37	2474
8	2416	18	2436	28	2456	38	2476
9	2418	19	2438	29	2458	39	2478
10	2420	20	2440	30	2460	40	2480

3. Table for Filed Antenna

Ant.	Brand	Model Name	Antenna Type	Connector	Gain (dBi)	NOTE
1	NA	ARBZ	PCB Antenna	N/A	1.0	Antenna

2.2 DESCRIPTION OF THE TEST MODES

To investigate the maximum EMI emission characteristics generates from EUT, the test system was pre-scanning tested base on the consideration of following EUT operation mode or test configuration mode which possible have effect on EMI emission level. Each of these EUT operation mode(s) or test configuration mode(s) mentioned above was evaluated respectively.

Test software: FCC tool
The test softeware was used to control EUT work in continuous TX mode, and select test channel, Wireless mode as below table

No.	Test model descrption
1	Low channel GFSK
2	Middle channel GFSK
3	High channel GFSK

Note:

1. All the test modes can be supply by battery, only the result of the worst case recorded in the report. GFSK mode is worst mode.
2. For radiated emission, 3 axis were chosen for testing for each applicable mode.
3. The EUT used fully charge battery when tested.
4. During the test, the dutycycle>98%, the test voltage was tuned from 85% to 115% of the Nominal rate supply votage, and found that the worst case was the nominal rated supply condition, So the report just shows that condition's data

Configuration and peripherals

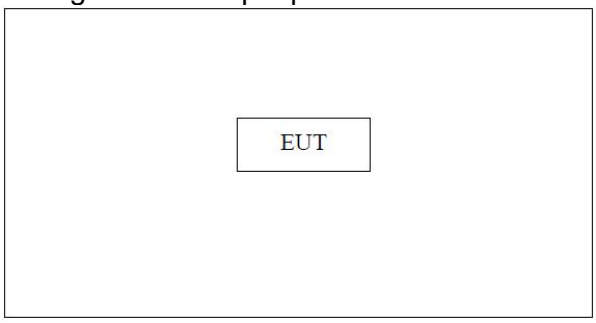

2.3 DESCRIPTION OF NECESSARY ACCESSORIES AND SUPPORT UNITS

The EUT has been tested as an independent unit together with other necessary accessories or support units. The following support units or accessories were used to form a representative test configuration during the tests.

Necessary accessories

Item	Equipment	Mfr/Brand	Model/Type No.	Serial No.	Note

Support units

Item	Equipment	Mfr/Brand	Model/Type No.	Serial No.	Note

Note:

(1) The support equipment was authorized by Declaration of Confirmation.

(2) For detachable type I/O cable should be specified the length in cm in『Length』column.

(3) “YES” is means “shielded” “with core”; “NO” is means “unshielded” “without core”.

2.4 EQUIPMENTS LIST

Radiation Test equipment

Kind of Equipment	Manufacturer	Type No.	Company No.	Last calibration	Calibrated until
EMI Test Receiver	R&S	ESRP 3	FCS-E001	2020. 06.26	2021. 06.25
Signal Analyzer	R&S	FSV40-N	FCS-E012	2020.06.05	2021.06.04
Active loop Antenna	ZHINAN	ZN30900C	FCS-E013	2020.08.09	2021.08.10
Bilog Antenna	SCHWARZBECK	VULB 9168	FCS-E002	2020.08.26	2021.08.25
Horn Antenna	SCHWARZBECK	BBHA 9120D	FCS-E003	2020.08.26	2021.08.25
SHF-EHF Horn Antenna (18G-40GHz)	A-INFO	LB-180400-KF	FCS-E018	2020.06.26	2021.06.25
Pre-Amplifier(0.1M-3G Hz)	EMCI	EM330N	FCS-E004	2020.06.26	2021.06.25
Pre-Amplifier (1G-18GHz)	N/A	TSAMP-0518SE	FCS-E014	2020.06.03	2021.06.02
Pre-Amplifier (18G-40GHz)	TERA-MW	TRLA-0400	FCS-E019	2020.08.08	2021.08.07
Temperature & Humidity	HTC-1	victor	FCS-E005	2020.08.26	2021.08.25

Conduction Test equipment

Kind of Equipment	Manufacturer	Type No.	Company No.	Last calibration	Calibrated until
EMI Test Receiver	R&S	ESPI	FCS-E020	2020.06.03	2021.06.02
LISN	R&S	ENV216	FCS-E007	2020.08.08	2021.08.07
LISN	ETS	3810/2NM	FCS-E009	2020.06.03	2021.06.02
Temperature & Humidity	HTC-1	victor	FCS-E008	2020.08.08	2021.08.07

RF Connected Test

Kind of Equipment	Manufacturer	Type No.	Company No.	Last calibration	Calibrated until
Spectrum Analyzer	Keysight	N9020A	FCS-E015	2020.06.03	2021.06.02
Spectrum Analyzer	Agilent	E4447A	MY50180039	2020.08.08	2021.08.07
Spectrum Analyzer	R&S	FSV-40	101499	2020.08.26	2021.08.25

3 CONDUCTED EMISSION MEASUREMENT

3.1 LIMIT

Operating frequency band. In case the emission fall within the restricted band specified on Part 207(a) limit in the table below has to be followed.

FREQUENCY (MHz)	Conducted Emissionlimit (dBuV)	
	Quasi-peak	Average
0.15 -0.5	66 - 56 *	56 - 46 *
0.50 -5.0	56.00	46.00
5.0 -30.0	60.00	50.00

Note:
(1) The tighter limit applies at the band edges.
(2) The limit of " * " marked band means the limitation decreases linearly with the logarithm of the frequency in the range.

3.2 TEST PROCEDURE

The following table is the setting of the receiver

Receiver Parameters	Setting
Attenuation	10 dB
Start Frequency	0.15 MHz
Stop Frequency	30 MHz
IF Bandwidth	9 kHz

a. The EUT was 0.8 meters from the horizontal ground plane and 0.4 meters from the vertical ground plane with EUT being connected to the power mains through a line impedance stabilization network (LISN). All other support equipments powered from additional LISN(s). The LISN provide 50 Ohm/ 50uH of coupling impedance for the measuring instrument.
b. Interconnecting cables that hang closer than 40 cm to the ground plane shall be folded back and forth in the center forming a bundle 30 to 40 cm long.
c. I/O cables that are not connected to a peripheral shall be bundled in the center. The end of the cable may be terminated, if required, using the correct terminating impedance. The overall length shall not exceed 1 m.
d. LISN at least 80 cm from nearest part of EUT chassis.
e. For the actual test configuration, please refer to the related Item –EUT Test Photos.

3.3 TEST SETUP

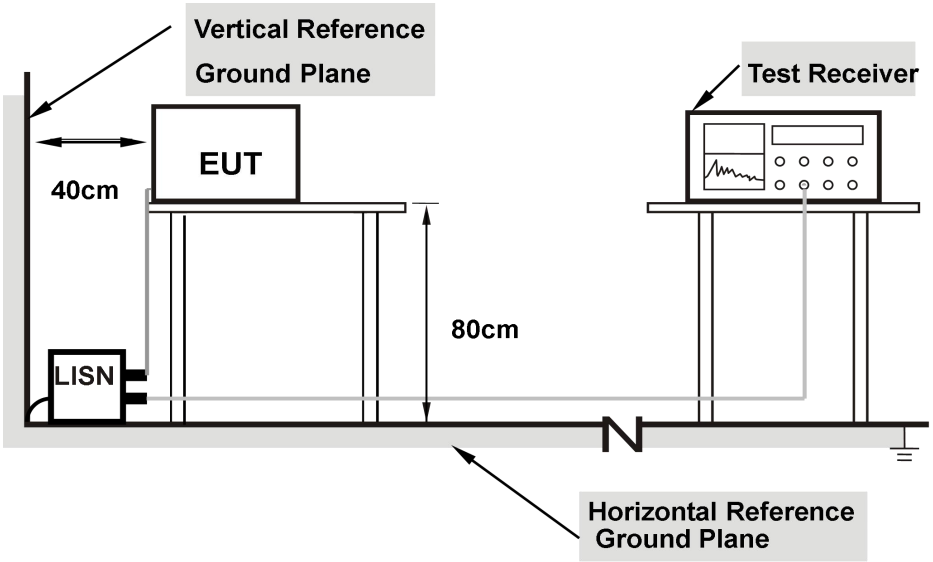

Note: 1.Support units were connected to second LISN.

2.Both of LISNs (AMN) are 80 cm from EUT and at least 80 from other units and other metal planes

3.4 TEST RESULTS

Temperature:	25℃	Relative Humidity:	50%
Test Mode:	GFSK	Test Voltage:	DC 5V
Phase:	L	Result:	Pass

No.	Frequency (MHz)	Reading (dBuV)	Correct Factor(dB/m)	Result (dBuV/m)	Limit (dBuV/m)	Margin (dB)	Remark
1	0.5505	25.61	9.87	35.48	56.00	20.52	QP
2	0.5505	18.14	9.87	28.01	46.00	17.99	AVG
3	1.3695	23.95	9.92	33.87	56.00	22.13	QP
4	1.3695	8.97	9.92	18.89	46.00	27.11	AVG
5	4.1280	19.21	9.96	29.17	56.00	26.83	QP
6	4.1280	2.17	9.96	12.13	46.00	33.87	AVG
7	9.6000	20.59	10.01	30.60	60.00	29.40	QP
8	9.6000	-1.13	10.01	8.88	50.00	41.12	AVG
9	18.7575	20.31	10.16	30.47	60.00	29.53	QP
10	18.7575	-2.99	10.16	7.17	50.00	42.83	AVG
11	23.7885	20.52	10.20	30.72	60.00	29.28	QP
12	23.7885	-2.46	10.20	7.74	50.00	42.26	AVG

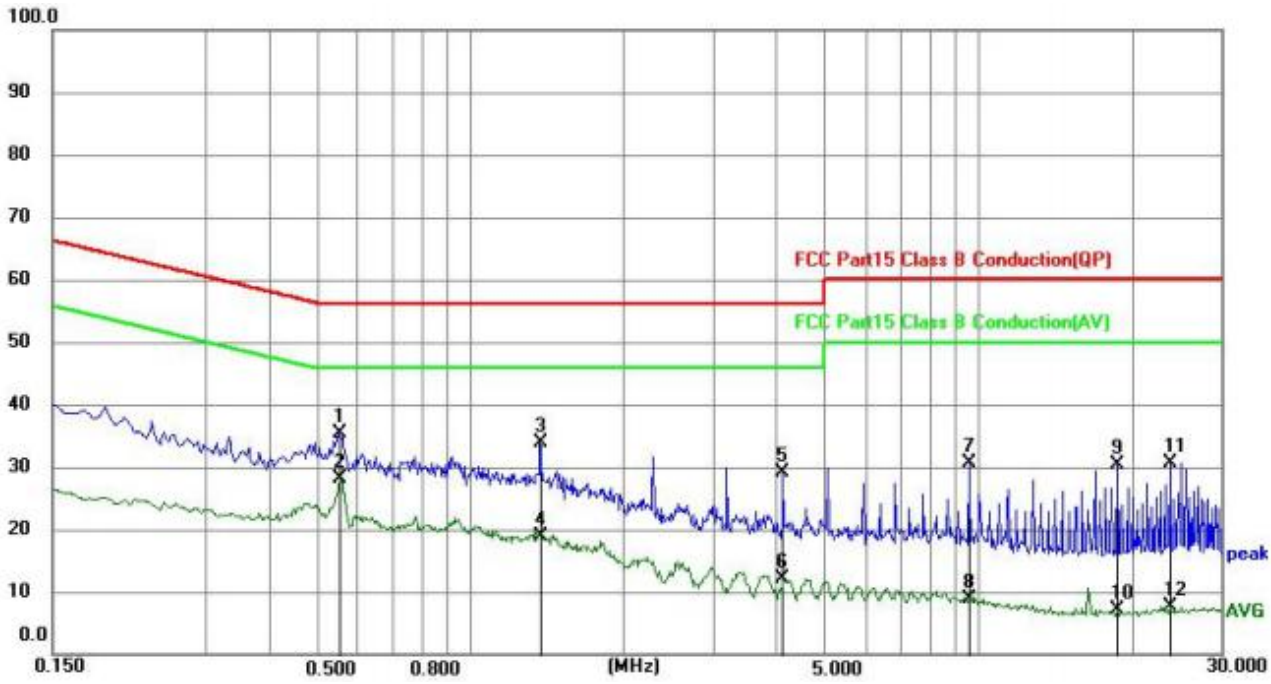

Temperature:	25℃	Relative Humidity:	50%
Test Mode:	GFSK	Test Voltage:	DC 5V
Phase:	N	Result:	Pass

No.	Frequency (MHz)	Reading (dBuV)	Correct Factor(dB/m)	Result (dBuV/m)	Limit (dBuV/m)	Margin (dB)	Remark
1	0.4560	31.96	9.86	41.82	56.77	14.95	QP
2	0.4560	15.32	9.86	25.18	46.77	21.59	AVG
3	1.3740	30.39	9.92	40.31	56.00	15.69	QP
4	1.3740	9.91	9.92	19.83	46.00	26.17	AVG
5	3.2010	28.28	9.97	38.25	56.00	17.75	QP
6	3.2010	3.35	9.97	13.32	46.00	32.68	AVG
7	5.9505	26.14	10.06	36.20	60.00	23.80	QP
8	5.9505	2.39	10.06	12.45	50.00	37.55	AVG
9	8.6955	25.97	10.16	36.13	60.00	23.87	QP
10	8.6955	2.20	10.16	12.36	50.00	37.64	AVG
11	22.4205	23.78	10.27	34.05	60.00	25.95	QP
12	22.4205	-1.55	10.27	8.72	50.00	41.28	AVG

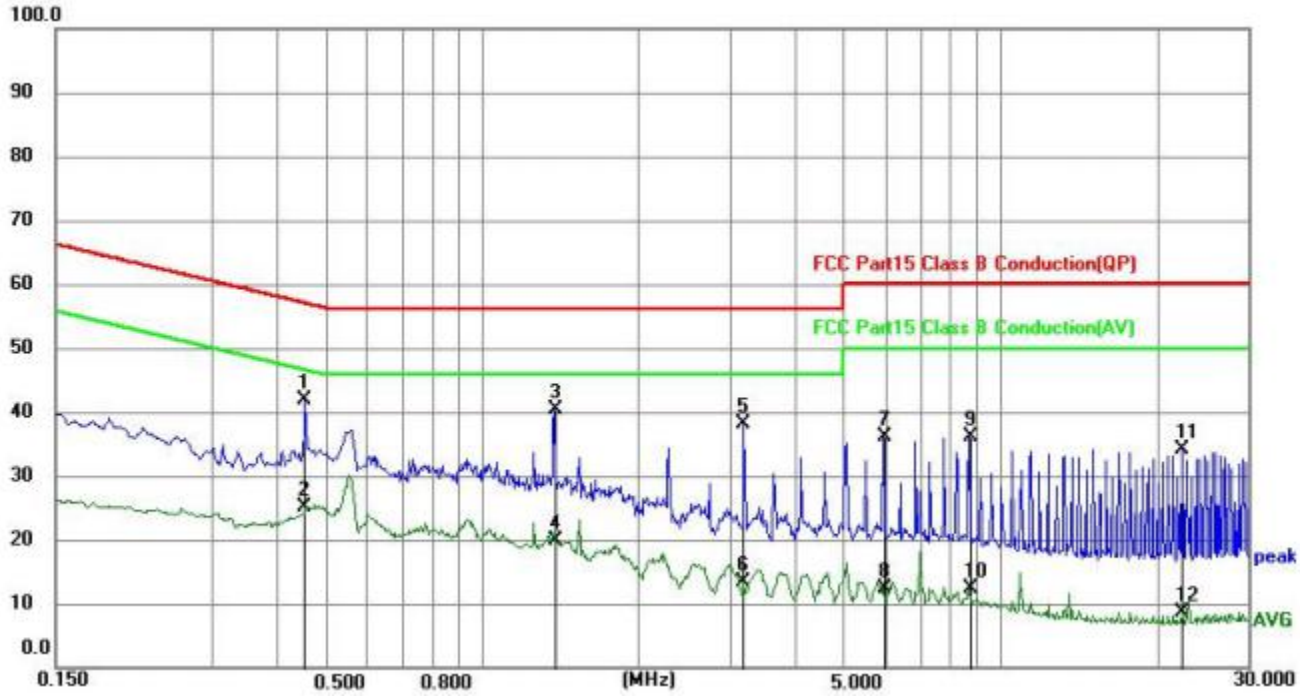

Remark:

1. All readings are Quasi-Peak and Average values.

4. RADIATED EMISSION MEASUREMENT

4.1 LIMIT

In any 100 kHz bandwidth outside the operating frequency band. In case the emission fall within the Restricted band specified on Part15.205(a)&209(a) limit in the table and according to ANSI C63.10-2013 below has to be followed

LIMITS OF RADIATED EMISSION MEASUREMENT (0.009mhz - 1000mhz)

Frequencies (MHz)	Field Strength (micorvolts/meter)	Measurement Distance (meters)
0.009~0.490	2400/F(KHz)	300
0.490~1.705	24000/F(KHz)	30
1.705~30.0	30	30
30~88	100	3
88~216	150	3
216~960	200	3
Above 960	500	3

LIMITS OF RADIATED EMISSION MEASUREMENT (1GHz-25 GHz)

FREQUENCY (MHz)	(dBuV/m) (at 3M)	
	PEAK	AVERAGE
Above 1000	74	54

LIMITS OF FIELD STRENGTH OF THE FUNDAMENTAL SIGNAL

FREQUENCY (MHz)	(dBuV/m) (at 3M)	
	PEAK	AVERAGE
2400-2483.5	114	94

Notes:
(1) The limit for radiated test was performed according to FCC PART 15C.
(2) The tighter limit applies at the band edges.
(3) Emission level (dBuV/m)=20log Emission level (uV/m).

4.2 TEST PROCEDURE

Spectrum Parameter	Setting
Attenuation	Auto
Detector	Peak/AV
Start Frequency	1000 MHz(Peak/AV)
Stop Frequency	10th carrier hamonic(Peak/AV)
RB / VB (emission in restricted band)	PK=1MHz / 1MHz, AV=1 MHz /10 Hz (Peak detector is for Both)

a. The measuring distance of at 3 m shall be used for measurements at frequency 0.009MHz up to 1GHz,and above 1GHz.
b. The EUT was placed on the top of a rotating table 0.8 meters (above 1GHz is 1.5 m) above the ground at a 3 meter anechoic chamber test site. The table was rotated 360 degrees to determine the position of the highest radiation.
c. The height of the equipment shall be 0.8 m(above 1GHz is 1.5 m); the height of the test antenna shall vary between 1 m to 4 m. horizontal and vertical polarizations of the antenna are set to make the measurement.
d. The initial step in collecting conducted emission data is a spectrum analyzer peak detector mode pre-scanning the measurement frequency range. Significant peaks are then marked and then QuasiPeak detector mode re-measured.
e. If the Peak Mode measured value compliance with and lower than Quasi Peak Mode Limit, the EUT shall be deemed to meet QP Limits and then no additional QP Mode measurement performed.
f. For the actual test configuration, please refer to the related Item –EUT Test Photos.

Note:
Both horizontal and vertical antenna polarities were tested and performed pretest to three orthogonal axis. The worst case emissions were reported
For fundamental frequency ,RBW>20dB BW ,VBW>RBW,PK detector for PK value, RMS detector for AV value.

4.3 TEST SETUP

（A）Radiated Emission Test-Up Frequency Below 30MHz

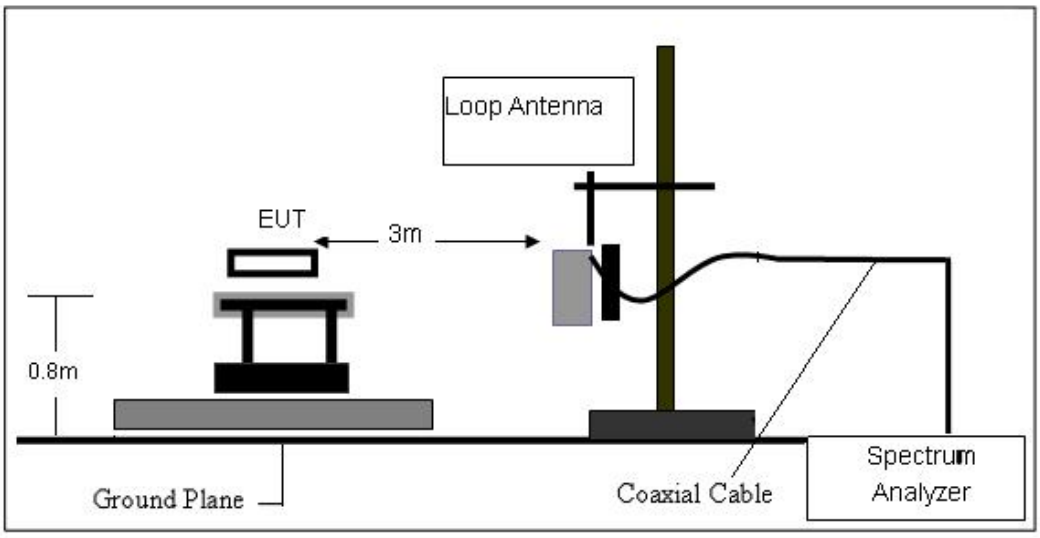

（B）Radiated Emission Test-Up Frequency 30MHz~1GHz

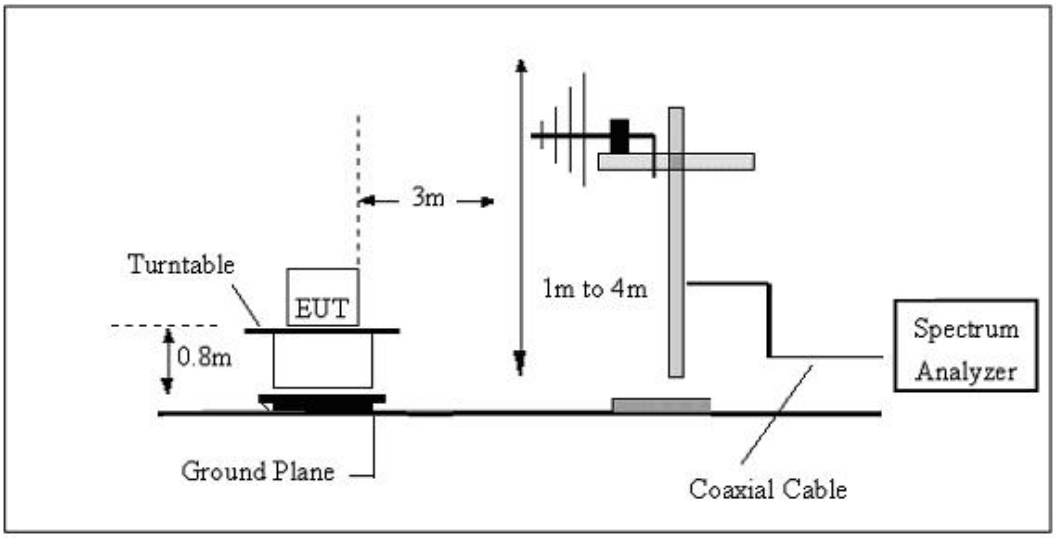

（C）Radiated Emission Test-Up Frequency Above 1GHz

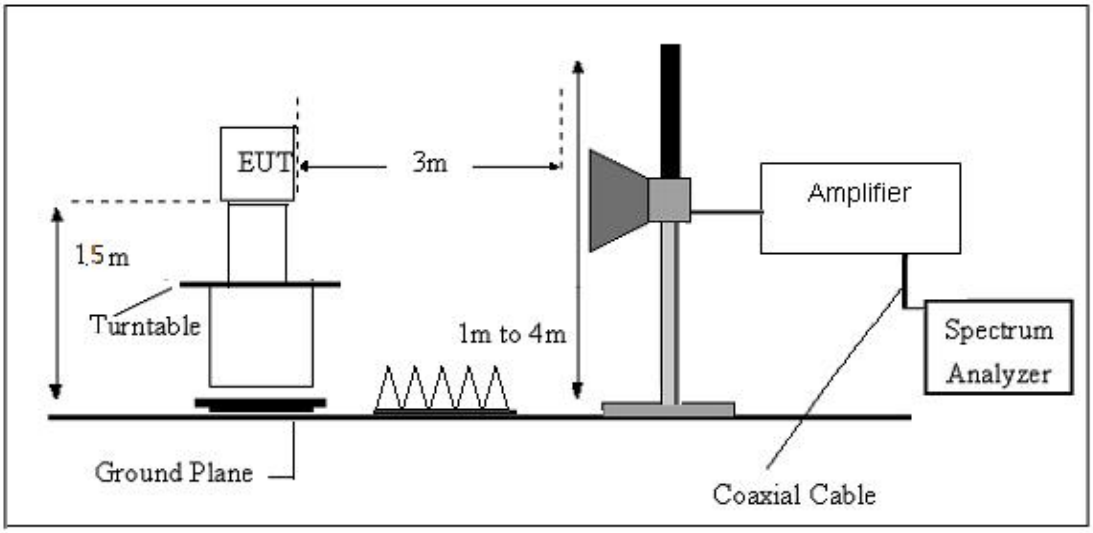

4.4 TEST RESULTS

Temperature:	25℃	Relative Humidity:	60%
Test Mode:	GFSK Mode	Test Voltage:	DC 5V

For field strength of the fundamental signal

Peak value

Frequency (MHz)	Read Level (dBuV)	Antenna Factor (dB/m)	Cable Loss (dB)	Preamp Factor (dB)	Level (dBuV/m)	Limit Line (dBuV/m)	Over Limit (dB)	polarization
2402.00	89.63	27.58	5.39	30.18	92.42	114.00	-21.58	Vertical
2402.00	87.46	27.58	5.39	30.18	90.25	114.00	-23.75	Horizontal
2440.00	88.16	27.55	5.43	30.06	91.08	114.00	-22.92	Vertical
2440.00	86.51	27.55	5.43	30.06	89.43	114.00	-24.57	Horizontal
2480.00	90.60	27.52	5.47	29.93	93.66	114.00	-20.34	Vertical
2480.00	87.77	27.52	5.47	29.93	90.83	114.00	-23.17	Horizontal

Average value

Frequency (MHz)	Read Level (dBuV)	Antenna Factor (dB/m)	Cable Loss (dB)	Preamp Factor (dB)	Level (dBuV/m)	Limit Line (dBuV/m)	Over Limit (dB)	polarization
2402.00	74.60	27.58	5.39	30.18	77.39	94.00	-16.61	Vertical
2402.00	73.16	27.58	5.39	30.18	75.95	94.00	-18.05	Horizontal
2440.00	73.32	27.55	5.43	30.06	76.24	94.00	-17.76	Vertical
2440.00	70.74	27.55	5.43	30.06	73.66	94.00	-20.34	Horizontal
2480.00	75.00	27.52	5.47	29.93	78.06	94.00	-15.94	Vertical
2480.00	73.03	27.52	5.47	29.93	76.09	94.00	-17.91	Horizontal

For spurious emission

(9KHz-30MHz)

Freq.	Reading	Limit	Margin	State	Test Result
(MHz)	(dBuV/m)	(dBuV/m)	(dB)	P/F	
--	--	--	--	--	PASS
--	--	--	--	--	PASS

Note:

The amplitude of spurious emissions which are attenuated by more than 20dB below the permissible value has no need to be reported.

Distance extrapolation factor =40 log (specific distance/test distance)(dB);

Limit line = specific limits (dBuv) + distance extrapolation factor.

(30MHZ-1000MHZ)

Temperature:	23.7℃	Relative Humidity:	61%
Test Voltage:	DC 5V	Phase:	Horizontal
Test Mode:	GFSK		

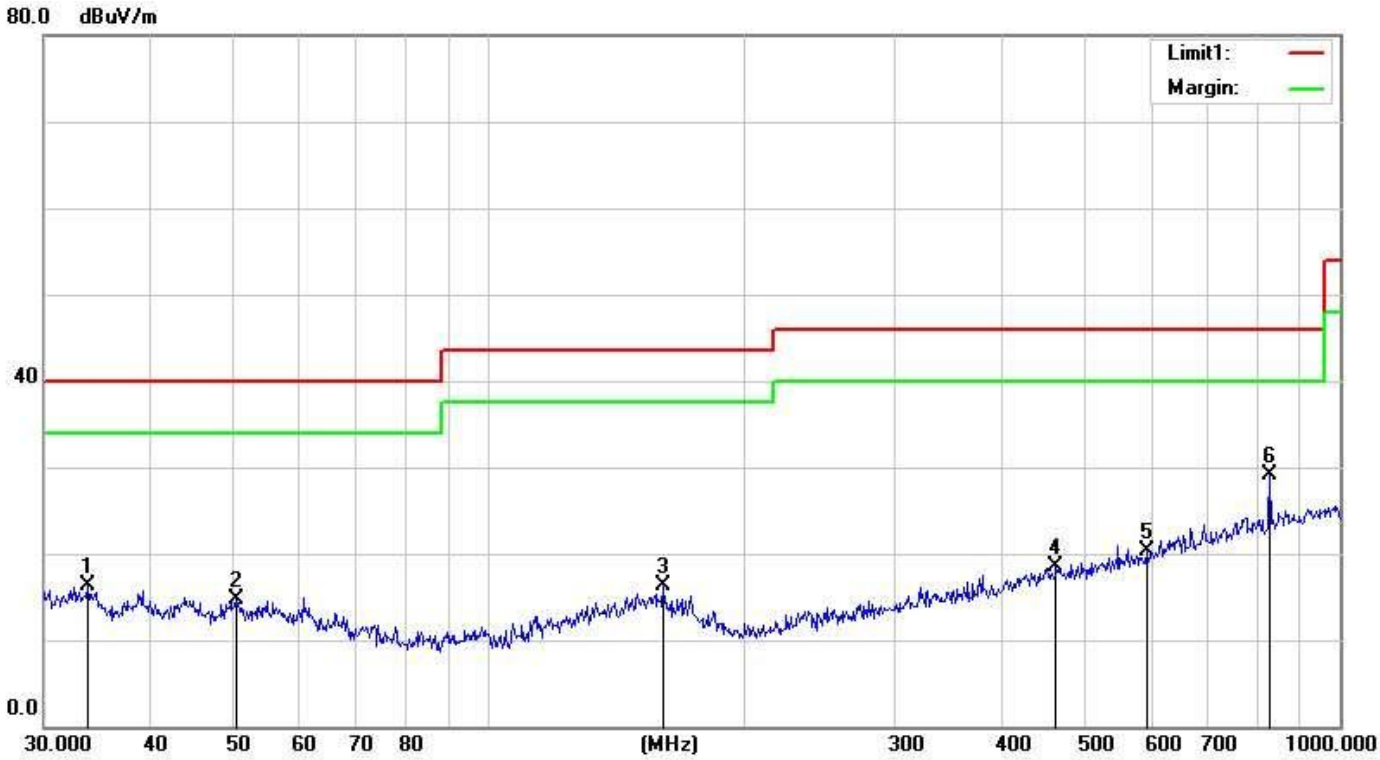

No.	Frequency (MHz)	Reading (dBuV)	Correction (dB/m)	Result (dBuV/m)	Limit (dBuV/m)	Margin (dB)	Remark
1	33.7986	31.12	-14.80	16.32	40.00	-23.68	QP
2	50.4090	30.72	-15.95	14.77	40.00	-25.23	QP
3	160.3456	31.24	-14.93	16.31	43.50	-27.19	QP
4	463.9696	30.61	-12.13	18.48	46.00	-27.52	QP
5	593.0497	30.39	-10.05	20.34	46.00	-25.66	QP
6	827.4934	35.58	-6.38	29.20	46.00	-16.80	QP

Temperature:	22.7℃	Relative Humidity:	61%
Test Voltage:	DC 5V	Phase:	Vertical
Test Mode:	GFSK		

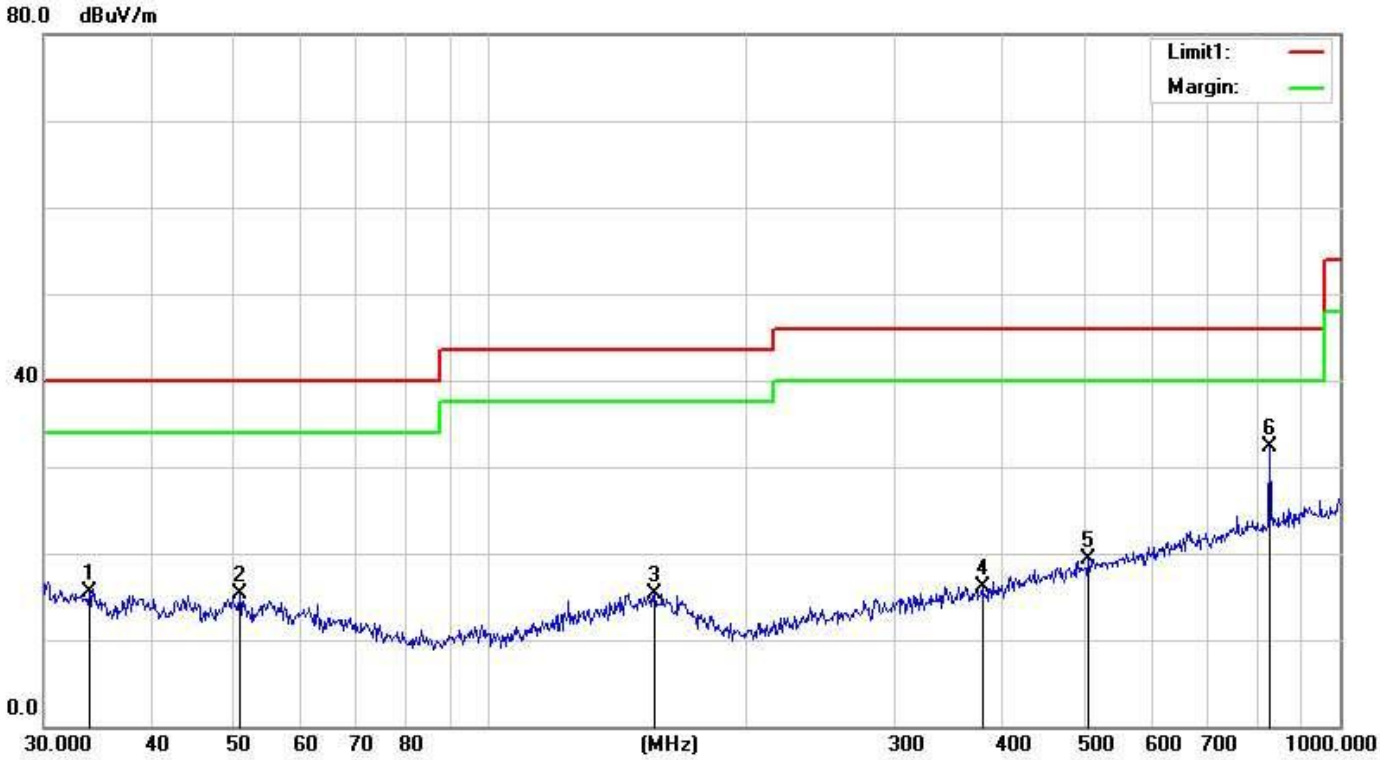

No.	Frequency (MHz)	Reading (dBuV)	Correction (dB/m)	Result (dBuV/m)	Limit (dBuV/m)	Margin (dB)	Remark
1	33.9174	10.13	5.28	15.41	40.00	-24.59	QP
2	50.9420	11.13	4.12	15.25	40.00	-24.75	QP
3	156.4578	10.02	5.20	15.22	43.50	-28.28	QP
4	379.9141	10.28	5.75	16.03	46.00	-29.97	QP
5	506.4791	10.82	8.53	19.35	46.00	-26.65	QP
6	827.4934	18.47	13.74	32.21	46.00	-13.79	QP

Remarks:

1. Margin = Result (Result =Reading + Factor) – Limit

(1GHZ~25GHZ)

LOW CH(GFSK)

Peak value

Frequency (MHz)	Read Level (dBuV)	Antenna Factor (dB/m)	Cable Loss (dB)	Preamp Factor (dB)	Level (dBuV/m)	Limit Line (dBuV/m)	Over Limit (dB)	polarization
4804.00	35.74	31.78	8.60	32.09	44.03	74.00	-29.97	Vertical
7206.00	30.80	36.15	11.65	32.00	46.60	74.00	-27.40	Vertical
9608.00	30.55	37.95	14.14	31.62	51.02	74.00	-22.98	Vertical
12010.00	*					74.00		Vertical
14412.00	*					74.00		Vertical
4804.00	39.71	31.78	8.60	32.09	48.00	74.00	-26.00	Horizontal
7206.00	32.41	36.15	11.65	32.00	48.21	74.00	-25.79	Horizontal
9608.00	29.82	37.95	14.14	31.62	50.29	74.00	-23.71	Horizontal
12010.00	*					74.00		Horizontal
14412.00	*					74.00		Horizontal

AV value

Frequency (MHz)	Read Level (dBuV)	Antenna Factor (dB/m)	Cable Loss (dB)	Preamp Factor (dB)	Level (dBuV/m)	Limit Line (dBuV/m)	Over Limit (dB)	polarization
4804.00	24.85	31.78	8.60	32.09	33.14	54.00	-20.86	Vertical
7206.00	19.66	36.15	11.65	32.00	35.46	54.00	-18.54	Vertical
9608.00	18.83	37.95	14.14	31.62	39.30	54.00	-14.70	Vertical
12010.00	*					54.00		Vertical
14412.00	*					54.00		Vertical
4804.00	28.91	31.78	8.60	32.09	37.20	54.00	-16.80	Horizontal
7206.00	21.73	36.15	11.65	32.00	37.53	54.00	-16.47	Horizontal
9608.00	18.43	37.95	14.14	31.62	38.90	54.00	-15.10	Horizontal
12010.00	*					54.00		Horizontal
14412.00	*					54.00		Horizontal

MIDDLE CH(GFSK)

Peak value

Frequency (MHz)	Read Level (dBuV)	Antenna Factor (dB/m)	Cable Loss (dB)	Preamp Factor (dB)	Level (dBuV/m)	Limit Line (dBuV/m)	Over Limit (dB)	polarization
4880.00	35.91	31.85	8.67	32.12	44.31	74.00	-29.69	Vertical
7320.00	30.90	36.37	11.72	31.89	47.10	74.00	-26.90	Vertical
9760.00	30.64	38.35	14.25	31.62	51.62	74.00	-22.38	Vertical
12200.00	*					74.00		Vertical
14640.00	*					74.00		Vertical
4880.00	39.91	31.85	8.67	32.12	48.31	74.00	-25.69	Horizontal
7320.00	32.54	36.37	11.72	31.89	48.74	74.00	-25.26	Horizontal
9760.00	29.93	38.35	14.25	31.62	50.91	74.00	-23.09	Horizontal
12200.00	*					74.00		Horizontal
14640.00	*					74.00		Horizontal

AV value

Frequency (MHz)	Read Level (dBuV)	Antenna Factor (dB/m)	Cable Loss (dB)	Preamp Factor (dB)	Level (dBuV/m)	Limit Line (dBuV/m)	Over Limit (dB)	polarization
4880.00	24.99	31.85	8.67	32.12	33.39	54.00	-20.61	Vertical
7320.00	19.75	36.37	11.72	31.89	35.95	54.00	-18.05	Vertical
9760.00	18.92	38.35	14.25	31.62	39.90	54.00	-14.10	Vertical
12200.00	*					54.00		Vertical
14640.00	*					54.00		Vertical
4880.00	29.07	31.85	8.67	32.12	37.47	54.00	-16.53	Horizontal
7320.00	21.83	36.37	11.72	31.89	38.03	54.00	-15.97	Horizontal
9760.00	18.53	38.35	14.25	31.62	39.51	54.00	-14.49	Horizontal
12200.00	*					54.00		Horizontal
14640.00	*					54.00		Horizontal

HIGH CH(GFSK)

Peak value

Frequency (MHz)	Read Level (dBuV)	Antenna Factor (dB/m)	Cable Loss (dB)	Preamp Factor (dB)	Level (dBuV/m)	Limit Line (dBuV/m)	Over Limit (dB)	polarization
4960.00	35.67	31.93	8.73	32.16	44.17	74.00	-29.83	Vertical
7440.00	30.74	36.59	11.79	31.78	47.34	74.00	-26.66	Vertical
9920.00	30.50	38.81	14.38	31.88	51.81	74.00	-22.19	Vertical
12400.00	*					74.00		Vertical
14880.00	*					74.00		Vertical
4960.00	39.62	31.93	8.73	32.16	48.12	74.00	-25.88	Horizontal
7440.00	32.35	36.59	11.79	31.78	48.95	74.00	-25.05	Horizontal
9920.00	29.77	38.81	14.38	31.88	51.08	74.00	-22.92	Horizontal
12400.00	*					74.00		Horizontal
14880.00	*					74.00		Horizontal

AV value

Frequency (MHz)	Read Level (dBuV)	Antenna Factor (dB/m)	Cable Loss (dB)	Preamp Factor (dB)	Level (dBuV/m)	Limit Line (dBuV/m)	Over Limit (dB)	polarization
4960.00	24.83	31.93	8.73	32.16	33.33	54.00	-20.67	Vertical
7440.00	19.64	36.59	11.79	31.78	36.24	54.00	-17.76	Vertical
9920.00	18.82	38.81	14.38	31.88	40.13	54.00	-13.87	Vertical
12400.00	*					54.00		Vertical
14880.00	*					54.00		Vertical
4960.00	28.88	31.93	8.73	32.16	37.38	54.00	-16.62	Horizontal
7440.00	21.71	36.59	11.79	31.78	38.31	54.00	-15.69	Horizontal
9920.00	18.41	38.81	14.38	31.88	39.72	54.00	-14.28	Horizontal
12400.00	*					54.00		Horizontal
14880.00	*					54.00		Horizontal

Remark:

1. *Final Level =Receiver Read level + Antenna Factor + Cable Loss – Preamplifier Factor*
2. *The emission levels of other frequencies are very lower than the limit and not show in test report.*
3. *"*", means this data is the too weak instrument of signal is unable to test.*

5. BAND EDGE TEST

5.1 LIMIT

According to §15.249(d), Emissions radiated outside of the specified frequency bands, except for harmonics, shall be attenuated by at least 50 dB below the level of the fundamental or to the general radiated emission limits in §15.209, whichever is the lesser attenuation.

5.2 TEST PROCEDURE

a. The EUT is placed on a turntable, which is 1.5m above ground plane.

b. EUT is set 3m away from the receiving antenna, which is varied from 1m to 4m to find out the highest emissions.

c. Use the following spectrum analyzer settings:
Span = wide enough to fully capture the emission being measured, RBW = 1 MHz, VBW ≥ RBW, Sweep = auto, Detector function = peak, Trace = max hold
Follow the guidelines in ANSI C63.4 with respect to maximizing the emission by rotating the EUT, adjusting the measurement antenna height and polarization, etc.

d. The peak reading of the emission, after being corrected by the antenna factor, cable loss, pre-amp gain, etc., is the peak field strength, submit this data. Each emission was to be maximized by changing the polarization of receiving antenna both horizontal and vertical.

e. Set the VBW to 10 Hz, while maintaining all of the other instrument settings. This peak level, once corrected, must comply with the limit specified in Section 15.209. If the duty cycle per channel of the hopping signal is less than 100 ms, then the reading obtained with the 10 Hz VBW may be further adjusted by a “duty cycle correction factor”, derived from 20log(duty cycle/100 ms), in an effort to demonstrate compliance with the 15.209 limit. Submit this data.

Note:

For fundamental frequency ,RBW>20dB BW ,VBW>RBW,PK detector for PK value, RMS detector for AV value.

5.3 TEST SETUP

Radiated Emission Test-Up Frequency Above 1GHz

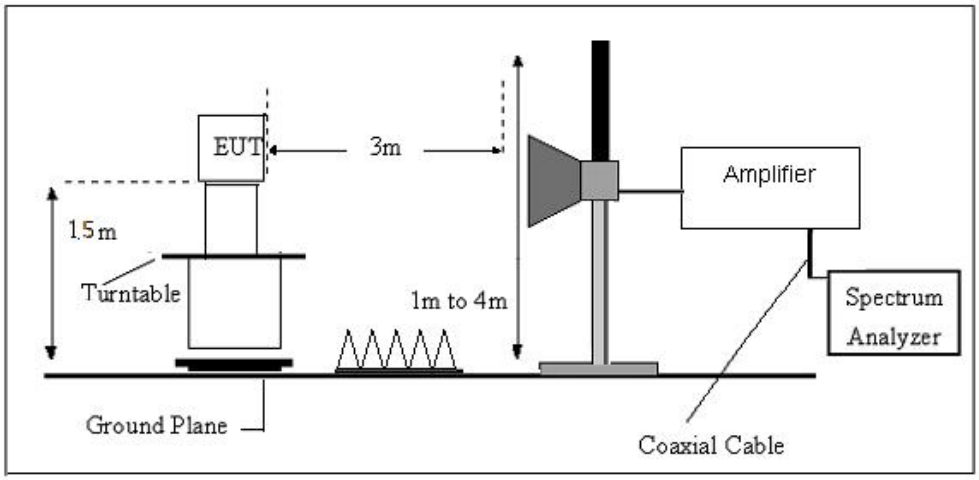

5.4 TEST RESULTS

Low CH (GFSK)

Horizontal

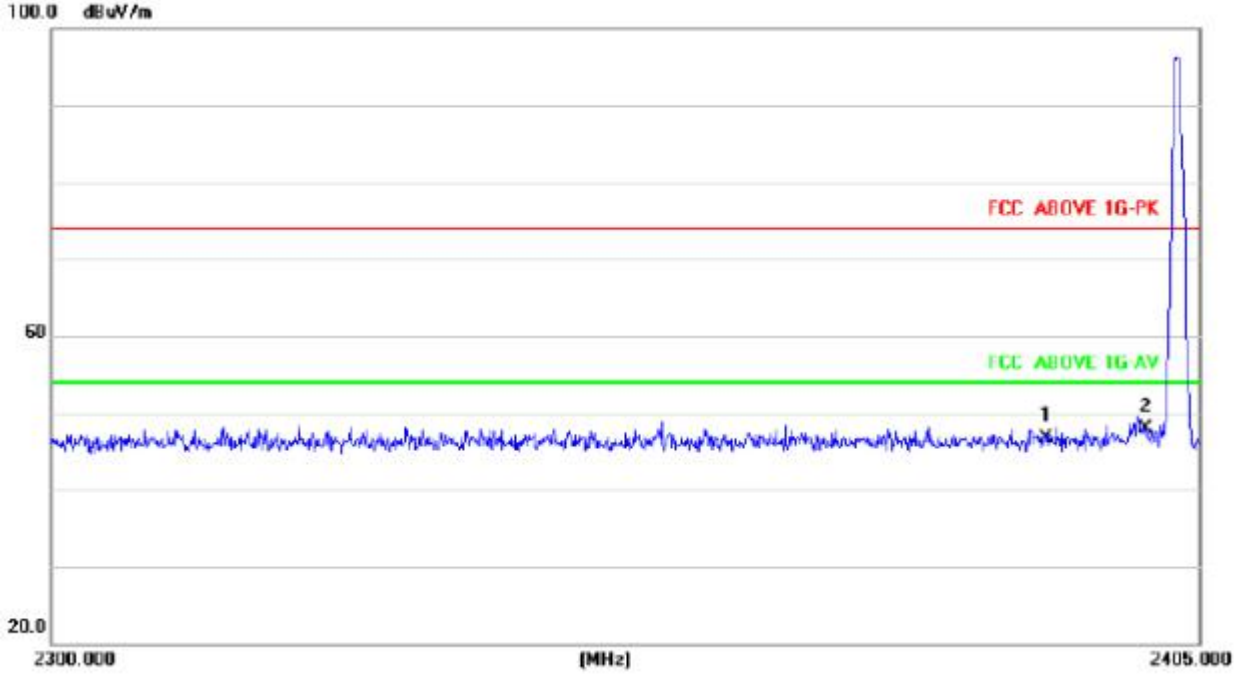

Vertical

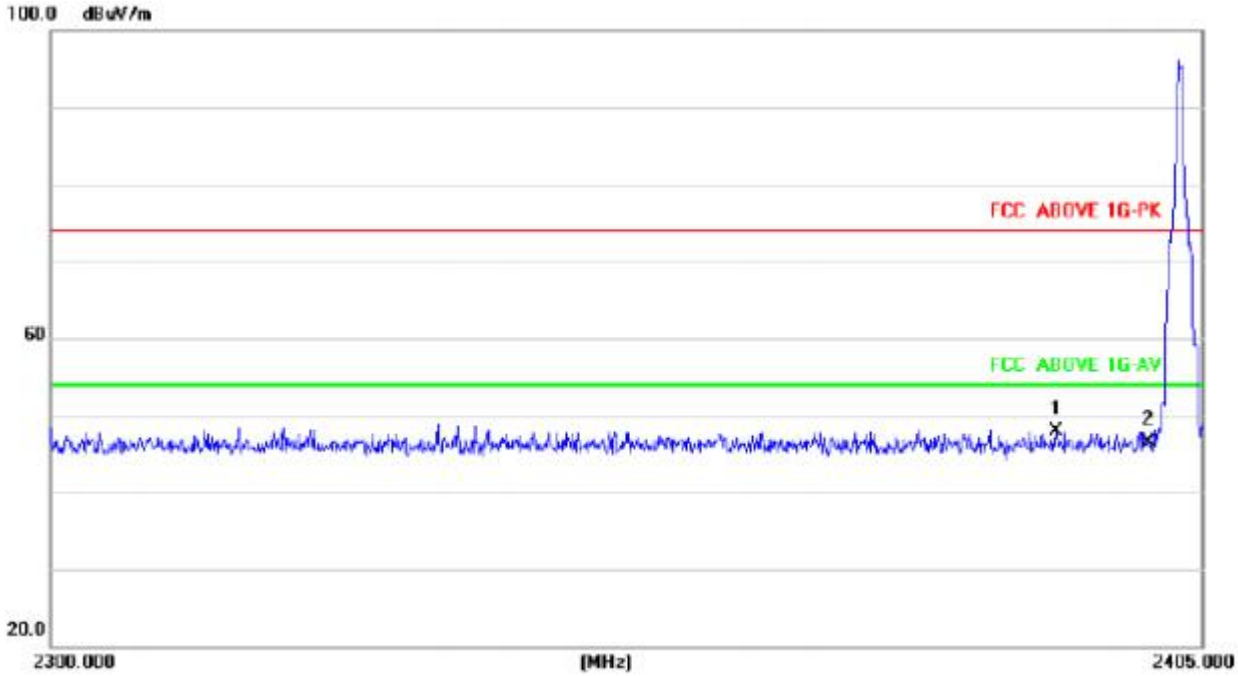

Peak value:

Frequency (MHz)	Read Level (dBuV)	Antenna Factor (dB/m)	Cable Loss (dB)	Preamp Factor (dB)	Level (dBuV/m)	Limit Line (dBuV/m)	Over Limit (dB)	Polarization
2390.00	40.01	27.59	5.38	30.18	42.80	74.00	-31.20	Horizontal
2400.00	53.69	27.58	5.39	30.18	56.48	74.00	-17.52	Horizontal
2390.00	39.65	27.59	5.38	30.18	42.44	74.00	-31.56	Vertical
2400.00	52.83	27.58	5.39	30.18	55.62	74.00	-18.38	Vertical

Average value:

Frequency (MHz)	Read Level (dBuV)	Antenna Factor (dB/m)	Cable Loss (dB)	Preamp Factor (dB)	Level (dBuV/m)	Limit Line (dBuV/m)	Over Limit (dB)	Polarization
2390.00	33.02	27.59	5.38	30.18	35.81	54.00	-18.19	Horizontal
2400.00	40.83	27.58	5.39	30.18	43.62	54.00	-10.38	Horizontal
2390.00	32.80	27.59	5.38	30.18	35.59	54.00	-18.41	Vertical
2400.00	42.47	27.58	5.39	30.18	45.26	54.00	-8.74	Vertical

High CH(GFSK)

Horizontal

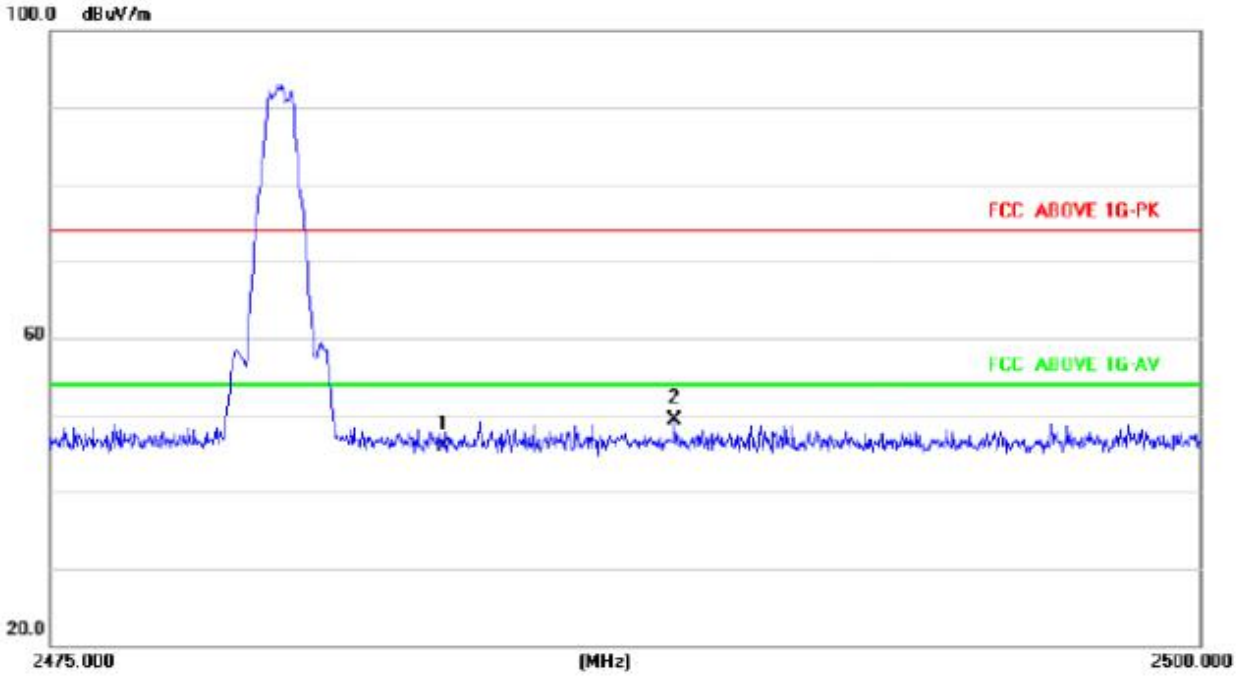

Vertical

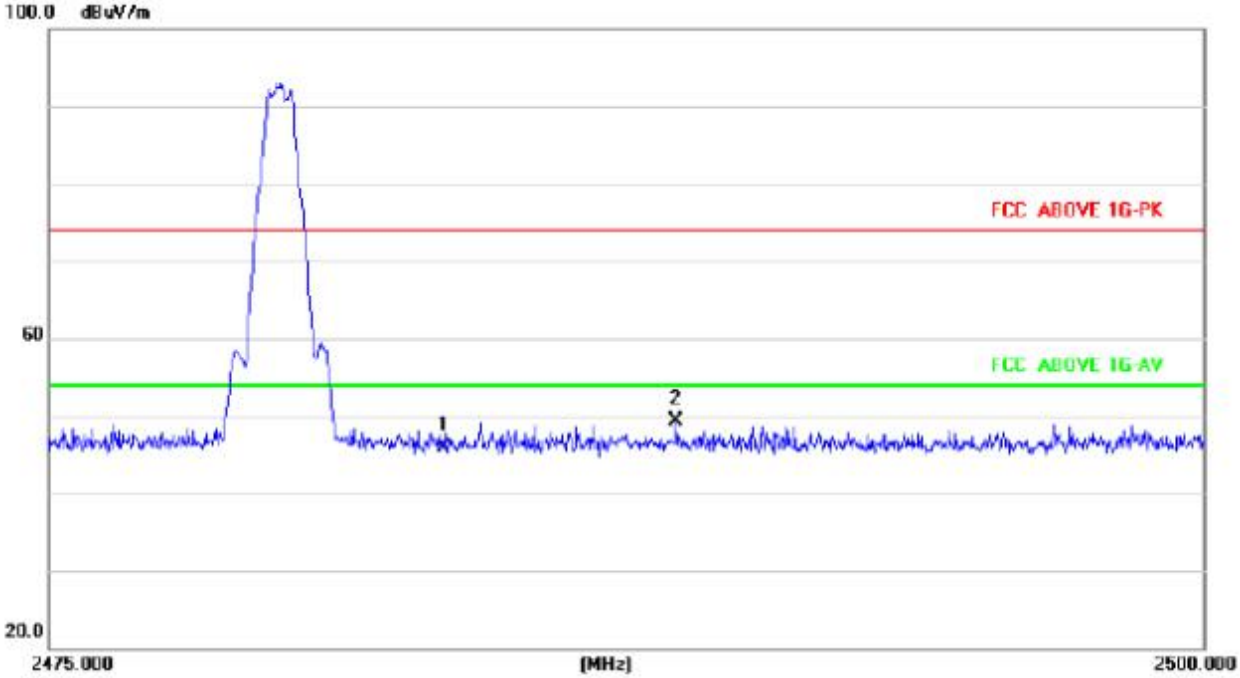

Peak value:

Frequency (MHz)	Read Level (dBuV)	Antenna Factor (dB/m)	Cable Loss (dB)	Preamp Factor (dB)	Level (dBuV/m)	Limit Line (dBuV/m)	Over Limit (dB)	Polarization
2483.50	43.20	27.53	5.47	29.93	46.27	74.00	-27.73	Horizontal
2500.00	44.35	27.55	5.49	29.93	47.46	74.00	-26.54	Horizontal
2483.50	42.78	27.53	5.47	29.93	45.85	74.00	-28.15	Vertical
2500.00	41.61	27.55	5.49	29.93	44.72	74.00	-29.28	Vertical

Average value:

Frequency (MHz)	Read Level (dBuV)	Antenna Factor (dB/m)	Cable Loss (dB)	Preamp Factor (dB)	Level (dBuV/m)	Limit Line (dBuV/m)	Over Limit (dB)	Polarization
2483.50	33.15	27.53	5.47	29.93	36.22	54.00	-17.78	Horizontal
2500.00	32.47	27.55	5.49	29.93	35.58	54.00	-18.42	Horizontal
2483.50	33.58	27.53	5.47	29.93	36.65	54.00	-17.35	Vertical
2500.00	34.23	27.55	5.49	29.93	37.34	54.00	-16.66	Vertical

Remark:

1. *Final Level =Receiver Read level + Antenna Factor + Cable Loss – Preamplifier Factor*

6. 20 DB BANDWIDTH TEST

6.1 LIMIT

According to 15.215 (c) Intentional radiators operating under the alternative provisions to the general emission limits, as contained in § 15.217 through 15.257 and in Subpart E of this part, must be designed to ensure that the 20 dB bandwidth of the emission, or whatever bandwidth may otherwise be specified in the specific rule section under which the equipment operates, is contained within the frequency band designated in the rule section under which the equipment is operated. The requirement to contain the designated bandwidth of the emission within the specified frequency band includes the effects from frequency sweeping, frequency hopping and other modulation techniques that may be employed as well as the frequency stability of the transmitter over expected variations in temperature and supply voltage. If a frequency stability is not specified in the regulations, it is recommended that the fundamental emission be kept within at least the central 80% of the permitted band in order to minimize the possibility of out-of-band operation

6.2 TEST PROCEDURE

a. Check the calibration of the measuring instrument using either an internal calibrator or a known signal from an external generator

b. Position the EUT without connection to measurement instrument. Turn on the EUT and connect it to measurement instrument. Then set it to any one convenient frequency within its operating range. Set a reference level on the measuring instrument equal to the highest peak value.

c. Measure the frequency difference of two frequencies that were attenuated 20 dB from the reference level. Record the frequency difference as the emission bandwidth.

6.3 TEST SETUP

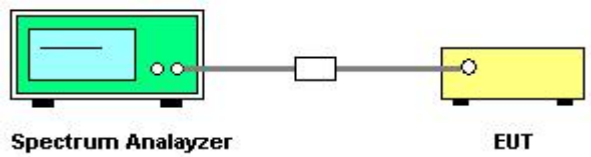

6.4 TEST RESULTS

Temperature:	25℃	Relative Humidity:	50%
Test Mode:	GFSK	Test Voltage:	DC 5V

Frequency	20dB Bandwidth (MHz)	Result
2402 MHz	1.205	PASS
2440 MHz	1.212	PASS
2480 MHz	1.213	PASS

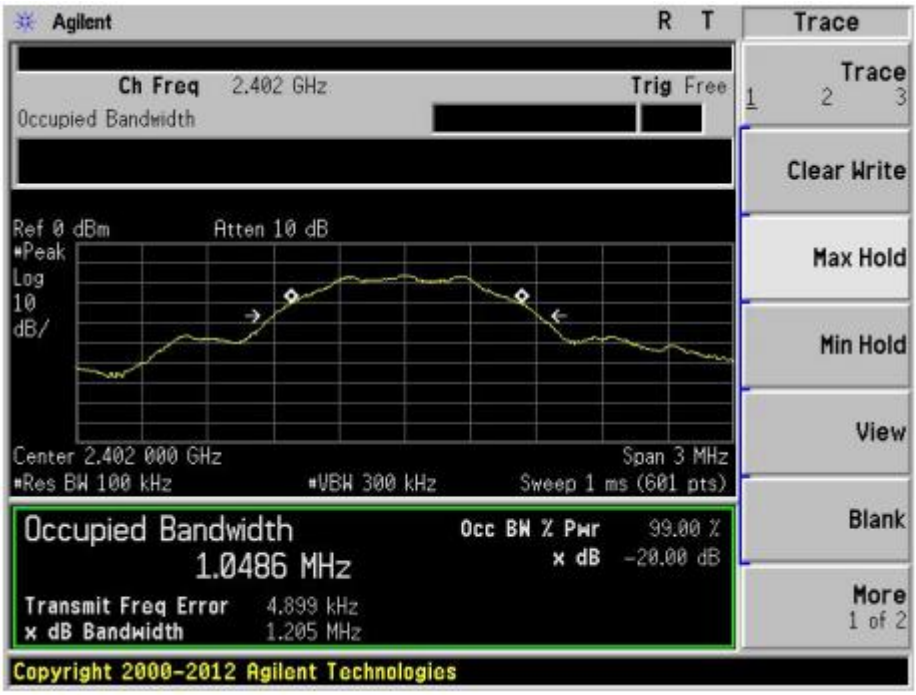

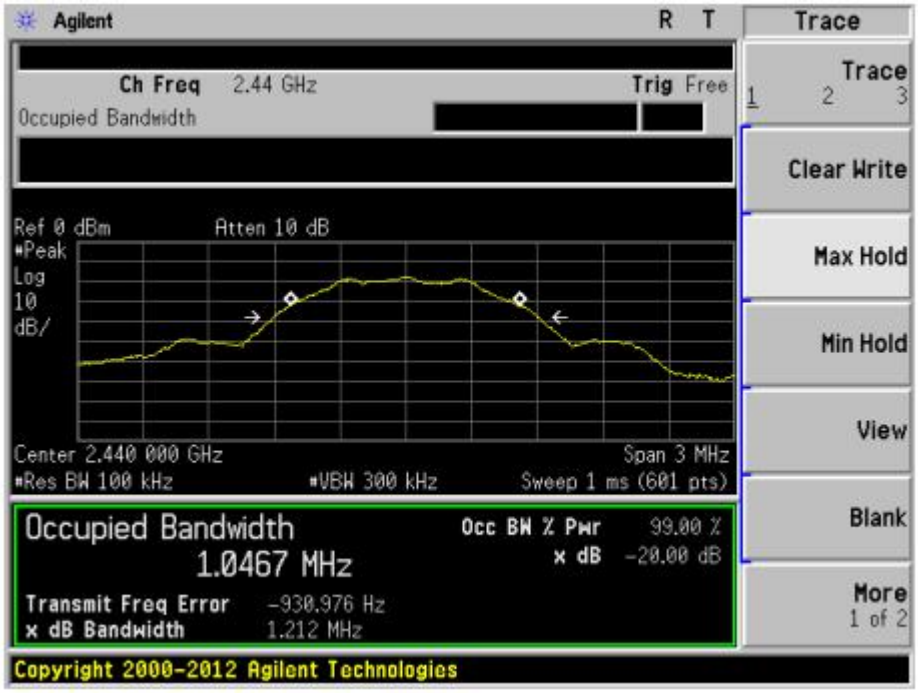
Agilent
R T
Trace
Ch Freq 2.44 GHz
Trig Free
Occupied Bandwidth
Trace
1 2 3
Clear Write
Ref 0 dBm
Atten 10 dB
Peak
Log
10
dB/
Max Hold
Min Hold
View
Center 2.440 000 GHz
Span 3 MHz
Res BW 100 kHz
VBW 300 kHz
Sweep 1 ms (601 pts)
Occupied Bandwidth
1.0467 MHz
Occ BW % Pwr 99.00 %
x dB -20.00 dB
Transmit Freq Error -930.976 Hz
x dB Bandwidth 1.212 MHz
Blank
More
1 of 2
Copyright 2000-2012 Agilent Technologies

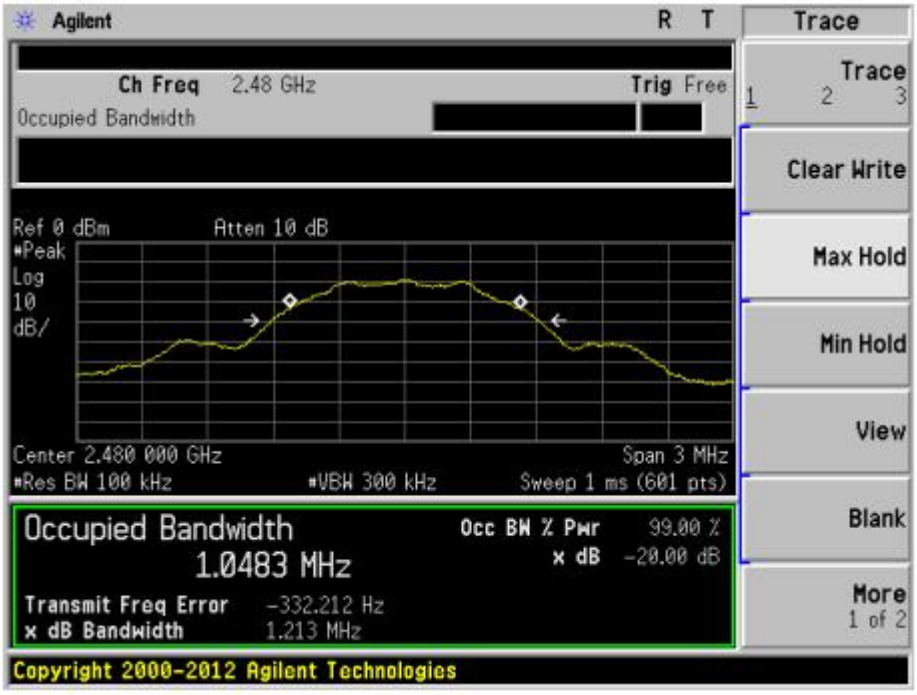
Agilent
R T
Trace
Ch Freq 2.48 GHz
Trig Free
Occupied Bandwidth
Trace
1 2 3
Clear Write
Ref 0 dBm
Atten 10 dB
Peak
Log
10
dB/
Max Hold
Min Hold
View
Center 2.480 000 GHz
Span 3 MHz
Res BW 100 kHz
VBW 300 kHz
Sweep 1 ms (601 pts)
Occupied Bandwidth
1.0483 MHz
Occ BW % Pwr 99.00 %
x dB -20.00 dB
Transmit Freq Error -332.212 Hz
x dB Bandwidth 1.213 MHz
Blank
More
1 of 2
Copyright 2000-2012 Agilent Technologies

7. ANTENNA REQUIREMENT

7.1 STANDARD REQUIREMENT

15.203 requirement: For intentional device, according to 15.203: an intentional radiator shall be designed to ensure that no antenna other than that furnished by the responsible party shall be used with the device.

7.2 EUT ANTENNA

The antennas used for this product are PCB antenna and other than that furnished by the responsible party shall be used with the device, the maximum peak gain of the transmit antenna is 1.0dBi.

※※※※※END OF THE REPORT※※※※※