FIP-500

Fiber Inspection Scope

PRELIMINARY

www.EXFO.com

Copyright © 2021 EXFO Inc. All rights reserved. No part of this publication may be reproduced, stored in a retrieval system or transmitted in any form, be it electronically, mechanically, or by any other means such as photocopying, recording or otherwise, without the prior written permission of EXFO Inc. (EXFO).

Information provided by EXFO is believed to be accurate and reliable. However, no responsibility is assumed by EXFO for its use nor for any infringements of patents or other rights of third parties that may result from its use. No license is granted by implication or otherwise under any patent rights of EXFO.

EXFO's Commerce And Government Entities (CAGE) code under the North Atlantic Treaty Organization (NATO) is 0L8C3.

The information contained in this publication is subject to change without notice.

Trademarks

EXFO's trademarks have been identified as such. However, the presence or absence of such identification does not affect the legal status of any trademark.

Units of Measurement

Units of measurement in this publication conform to SI standards and practices.

Patents

The exhaustive list of patents is available at EXFO.com/patent.

Version number: 1.0.0.1

Contents

Regulatory Information v

1 Introducing the FIP-500 Fiber Inspection Scope 1

Main Features 1
LED Indicators Description 4
Battery Status Icon Description 6
Power Sources 7
Available Options 8
Technical Specifications 8
Conventions 9

2 Safety Information 11

General Safety Information 11
Other Safety Symbols on Your Unit 13
Electrical Safety Information 14

3 Getting Started with Your Unit 17

Turning on Your Unit 17
Turning off Your Unit 18
Configuring Your Unit at First Startup 19
Understanding the Inspection Screen 20
Changing Your Unit's SmartTip 21
Cleaning and Connecting Optical Fibers 23
Temperature Management 25

4 Setting up Your Unit 27

Adjusting Brightness 27
Adjusting the Date and Time 28
Configuring Sleep Mode 30
Reverting to Factory Settings 32

5 Inspecting Fiber Ends 35

Selecting a Connector Type 35
Selecting a Fiber Type 38
Inspecting Multi-Fiber Ends 40
Navigating Through Multi-Fiber Captures 41
Displaying or Hiding the Overlay 43
Enabling or Disabling the Flashlight 44

6 Working with the EXFO Basecamp Application 45
Installing the EXFO Basecamp application on Your Smart Device 46
Establishing or Closing a Connection With a Smart Device Via the Bluetooth Technology 47
Enabling or Disabling the Wireless Communication 49
Working With a Wireless Network 50
Accessing the Online Documentation From the Smart Device 57

7 Maintenance 63
Cleaning Lenses 64
Cleaning the Touchscreen 66
Battery Maintenance Recommendations 67
Recharging the Battery 69
Replacing the Battery 72
Upgrading Applications and Firmware 79
Recycling and Disposal 80

8 Troubleshooting 81
Solving Common Problems 81
Restoring Your Unit to Normal Operation 85
Accessing the Online Documentation From the FIP-500 88
Contacting the Technical Support Group 89
Sharing Information With the Technical Support Group 90
Viewing System Information 91
Transportation 93

9 Warranty 95
General Information 95
Liability 96
Exclusions 96
Certification 96
Service and Repairs 97
EXFO Service Centers Worldwide 98

Index 99

Regulatory Information

Canada and USA Electromagnetic Interference Regulatory Statement

Electronic test and measurement equipment is exempt from FCC part 15, subpart B compliance in the United States of America and from ICES-003 compliance in Canada. However, EXFO Inc. makes reasonable efforts to ensure compliance to the applicable standards.

The limits set by these standards are designed to provide reasonable protection against harmful interference when the equipment is operated in a commercial environment. This equipment generates, uses, and can radiate radio frequency energy and, if not installed and used in accordance with the user documentation, may cause harmful interference to radio communications. Operation of this equipment in a residential area is likely to cause harmful interference in which case the user will be required to correct the interference at his own expense.

Modifications not expressly approved by the manufacturer could void the user's authority to operate the equipment.

European Electromagnetic Compatibility Regulatory Statement

Warning: This is a class A product. In a domestic environment, this product may cause radio interference in which case the user may be required to take adequate measures. Your product is certified for (or is suitable for) use in industrial electromagnetic environments.

General Wireless Compliance Related Information

Your unit comes with an internal wireless module (adapter) and two antennas for which the information hereafter applies:

This product does not contain any wireless user-serviceable components. Any unauthorized product changes or modifications will invalidate warranty and all applicable regulatory certifications and approvals.

Canada and USA Wireless Compliance Related Information

Your unit comes with an internal wireless module (adapter) and two antennas for which the information hereafter applies:

- This device complies with Part 15 of the FCC Rules.
- This device complies with Innovation, Sciences and Economic Development Canada license-exempt RSS standards.
- Operation is subject to the following two conditions:
  (1) This device may not cause harmful interference

  and

  (2) this device must accept any interference received, including interference that may cause undesired operation.

Use in Specific Environments:

- The use of wireless products in hazardous locations is limited by the constraints posed by the safety directors of such environments.
- The use of wireless products on airplanes is governed by the Federal Aviation Administration (FAA).
- The use of wireless products in hospitals is restricted to the limits set forth by each hospital.
- Do not operate a portable transmitter near unshielded blasting caps or in an explosive environment.

Radiation Exposure Statement:

- The product complies with the US/Canada portable RF exposure limit set forth for an uncontrolled environment and is safe for intended operation as described in this user documentation.
- Further RF exposure reduction can be achieved if the device can be kept as far as possible from the user's body.

RF Function and Frequency Range:

Your unit is designed to operate in the Bluetooth® and WLAN 2.4 GHz bands.

The information about the Bluetooth® and Wi-Fi frequency bands is as follows:

- Bluetooth®: Channels 1 through 11 - Between the frequencies 2412 MHz - 2462 MHz.
  The output power is 11.7 dBm typical.
- Wi-Fi: Channels 1 through 11 - Between the frequencies 2412 MHz - 2462 MHz.
  The maximum output power is 18.5 dBm.

European Wireless Compliance Related Information

Your unit is designed to operate in the Bluetooth® and WLAN 2.4 GHz bands.

The information about the Bluetooth® and Wi-Fi frequency bands is as follows:

- Bluetooth®: Channels 1 through 13 - Between the frequencies 2412 MHz - 2472 MHz.
  The output power is 11.7 dBm typical.
- Wi-Fi: Channels 1 through 13 - Between the frequencies 2412 MHz - 2472 MHz.
  The maximum output power is 18.5 dBm.

This is a 2.4 GHz wideband transmission system (transceiver), intended for use in all EU member states and EFTA countries, except in France and Italy where restrictive use applies.

In Italy, the end-user should apply for a license at the national spectrum authorities in order to obtain authorization to use the device for setting up outdoor radio links and/or for supplying access to telecommunications and/or network services.

This device may not be used for setting up radio links in France, and in some areas the RF output power may be limited to 10 mW EIRP in the frequency range of 2454 - 2483.5 MHz. For detailed information, the end-user should contact the national spectrum authority in France.

Local Restrictions on 802.11a, 802.11b, 802.11d, 802.11g, 802.11n, and 802.11ac Radio Usage

Due to the fact that the frequencies used by 802.11a, 802.11b, 802.11d, 802.11g, 802.11n, and 802.11ac wireless LAN devices may not yet be harmonized in all countries, 802.11a, 802.11b, 802.11d, 802.11g, 802.11n, and 802.11ac products are designed for use only in specific countries, and are not allowed to be operated in countries other than those of designated use. As a user of these products, you are responsible for ensuring that the products are used only in the countries for which they were intended and for verifying that they are configured with the correct selection of frequency and channel for the country of use.

European Declaration of Conformity

Hereby, EXFO declares that the radio equipment type “Wideband Data Transmission” is in compliance with European Directive 2014/53/EU.

The full text of the EU declaration of conformity is available at the following Internet address: *www.exfo.com/en/resources/legal-documentation*.

Japanese Technical Conformity Mark for Radio Law

This equipment contains specified radio equipment that has been certified to the Technical Regulation Conformity Certification for Japan, under the Radio Law.

R **201-135370**

Japan Wireless Compliance Related Information

Your unit is designed to operate in the Bluetooth® and WLAN 2.4 GHz bands.

The information about the Bluetooth® and Wi-Fi frequency bands is as follows:

- Bluetooth®: Channels 1 through 13 - Between the frequencies 2412 MHz - 2472 MHz.
  The output power is 11.7 dBm typical.
- Wi-Fi: Channels 1 through 13 - Between the frequencies 2412 MHz - 2472 MHz.
  The maximum output power is 18.5 dBm.

Note: *Information such as the FCC and IC numbers is available directly from your unit. From the main menu, tap* ***Settings*** *and then* ***Regulatory****. The information is listed on the* ***Regulatory*** *screen.*

1 Introducing the FIP-500 Fiber Inspection Scope

The FIP-500 Fiber Inspection Scope is a portable video microscope used to inspect fiber ends. Its built-in 2.4-inch LCD capacitive touchscreen and quick-change SmartTips facilitate the examination of patchcord connectors and also hard-to-reach connectors on the back of patch panels and bulkhead adapters.

Note: *Depending on the type of smart device you are using, the appearance of the* EXFO Basecamp *application may vary slightly from the illustrations presented in this documentation. Unless otherwise specified, the information applies both to the Android- and iOS-based smart devices.*

Note: *Both on your unit and in the* EXFO Basecamp *application, the period is used as the decimal separator in numerical values, when applicable.*

Main Features

- Ergonomic design
- 2.4-inch LCD capacitive touchscreen directly on unit allowing standalone measurements
- Fast auto focus, auto centering, auto acquisition and auto analysis
- Quick change of SmartTips
- Designed to support multi-fiber connectors with a multi-fiber model
- Visual feedback
- Wi-Fi and Bluetooth® connectivity
- Easy software updates

CAUTION

The optical head of your unit contains precision components. To ensure optimum protection when you do not use the unit or during transportation, cover the optical head with the provided protective cap.

Left side view

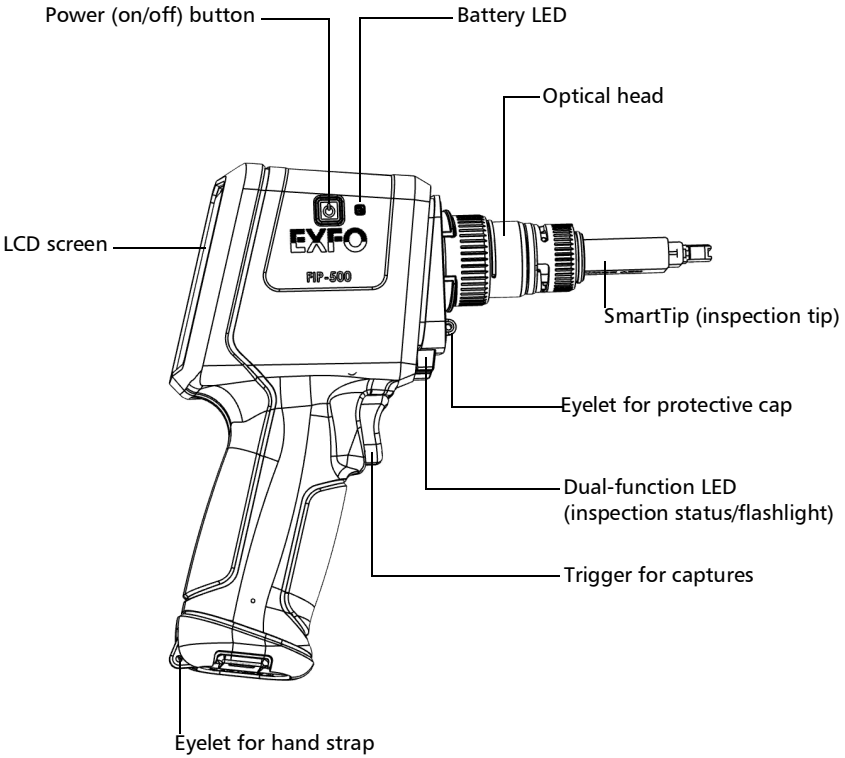

Back view

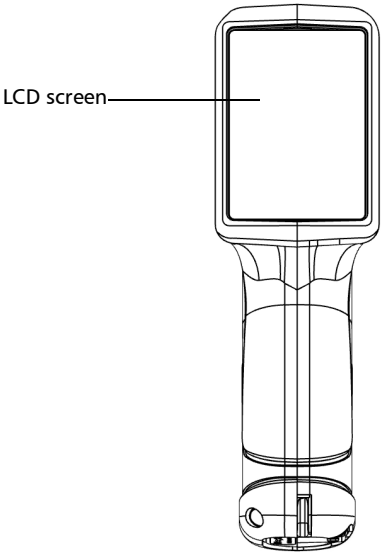

Bottom view

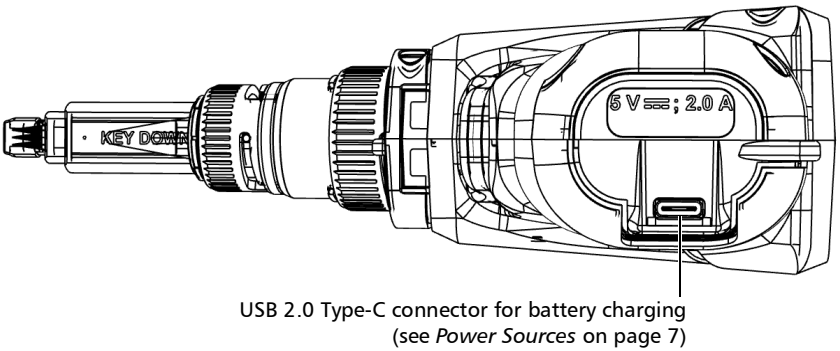

LED Indicators Description

Your unit is equipped with a battery LED and a dual-function LED.

Battery LED

The battery LED, located next to the power button, on the side of your unit, provides you with information about the battery status.

The table below indicates the possible statuses.

Unit	Status	Meaning
Connected to an external power source	Off	The external power source does not provide sufficient power to charge the battery.
	Blue	The battery is fully charged.
	Blue, blinking – slow blinking	The battery is charging.
	Blue, blinking – fast blinking	The battery charge has been interrupted, possibly because the unit may not be within the recommended charging temperatures. For more information, see *Equipment Ratings* on page 15.
	Red, fast blinking	Charge or temperature error.
	Red, steady for 5 seconds	The battery level is too low to start the unit.
	White	The unit is starting up.
Not connected to an external power source	Off	The unit is not connected to an external power source.
	Red, steady for 5 seconds	The unit is off and the battery level is too low to start the unit.
	White	The unit is starting up.

Dual-Function LED

The dual-function LED is located just above the trigger used for captures, on the front of your unit. It can indicate the status of the inspection or be used as a flashlight to help you see the connectors you have to inspect in darker rooms (see *Enabling or Disabling the Flashlight* on page 44).

The table below indicates the possible statuses.

Status	Meaning
Blue	The unit is ready and operational. The flashlight feature is disabled.
Blue, blinking	The capture process is in progress.
Green, steady for 5 seconds	The analysis found no defects or scratches exceeding the pass criteria.
Red, blinking for 5 seconds	➤ The capture process could not be completed successfully. Follow the instructions on screen. ➤ The auto-focus operation has timed out. ➤ There is a mismatch between the number of fibers found and the selected connector layout.
Red, steady for 5 seconds	The analysis found defects or scratches that do not meet the pass criteria.
White	The unit is ready and operational. The flashlight feature is enabled.

Battery Status Icon Description

The battery status icon is shown in the upper right corner of the title bar. It complements the information provided by the unit's LED.

Icon	Meaning
	The portion of the icon that appears in white in the title bar (in gray here) reflects the current battery level.
	A red icon indicates that the battery level is running low and that you should connect the unit to a power outlet.
	A flash symbol indicates that the unit is connected to an external power source.

Power Sources

The Fiber Inspection Scope operates with the following power sources:

➤ Indoor use only: USB power adapter connected to a power outlet (fastest way to charge the battery).

Note: *The standard USB ports of a computer cannot power your unit or charge its battery while the unit is on. If you connect your unit to such a USB port with the USB cable, the unit will still consume battery power. If the unit is off when you connect it to the USB port of a computer, its battery could charge, but slowly.*

Note: *If you have a vehicle equipped with dedicated USB charging ports, you could connect your unit to one of these ports to charge the battery. The actual results will vary with each vehicle. You could also use a certified USB power bank (portable charger) to charge your unit.*

➤ Indoor and outdoor use: One lithium-ion (Li-ion) or one lithium-polymer (Li-Po) rechargeable battery (battery that automatically takes over if you disconnect the unit from its external power source).

Possible to switch from an external power source to battery power or vice versa without affecting operation.

The battery recharges automatically when the unit is connected to an external power source.

Note: *When the ambient temperature is below 0 °C (32 °F) or when it reaches or exceeds about 40 °C (104°F), the battery can either charge more slowly than usual, or not charge at all, depending on the internal temperature of your unit.*

Note: *You can replace the battery yourself (see* Replacing the Battery *on page 72).*

For more information, see *Electrical Safety Information* on page 14.

Available Options

The MF option offered for your wireless FIP-500 Fiber Inspection Scope allows you to inspect multi-fiber connectors.

Technical Specifications

Hereby, EXFO declares that the radio equipment type “Wideband Data Transmission” is in compliance with European Directive 2014/53/EU.

The full text of the EU declaration of conformity is available at the following Internet address: *www.exfo.com/en/resources/legal-documentation*.

Conventions

Before using the product described in this guide, you should understand the following conventions:

WARNING

Indicates a potentially hazardous situation which, if not avoided, could result in *death or serious injury*. Do not proceed unless you understand and meet the required conditions.

CAUTION

Indicates a potentially hazardous situation which, if not avoided, may result in *minor or moderate injury*. Do not proceed unless you understand and meet the required conditions.

CAUTION

Indicates a potentially hazardous situation which, if not avoided, may result in *component damage*. Do not proceed unless you understand and meet the required conditions.

IMPORTANT

Refers to information about this product you should not overlook.

2 Safety Information

General Safety Information

WARNING

Do not install or terminate fibers while a light source is active. Never look directly into a live fiber and ensure that your eyes are protected at all times.

WARNING

The use of controls, adjustments and procedures, namely for operation and maintenance, other than those specified herein may result in hazardous radiation exposure or impair the protection provided by this unit.

WARNING

If the equipment is used in a manner not specified by the manufacturer, the protection provided by the equipment may be impaired.

WARNING

Use only accessories designed for your unit and approved by EXFO. For a complete list of accessories available for your unit, refer to its technical specifications or contact EXFO.

IMPORTANT

Refer to the documentation provided by the manufacturers of any accessories used with your EXFO product. It may contain environmental and/or operating conditions limiting their use.

IMPORTANT

When you see the following symbol on your unit , make sure that you refer to the instructions provided in your user documentation. Ensure that you understand and meet the required conditions before using your product.

IMPORTANT

When you see the following symbol on your unit , it indicates that the unit is equipped with a laser source, or that it can be used with instruments equipped with a laser source. These instruments include, but are not limited to, modules and external optical units.

IMPORTANT

Other safety instructions relevant for your product are located throughout this documentation, depending on the action to perform. Make sure to read them carefully when they apply to your situation.

CAUTION

Do not use the fiber inspection scope outdoors in wet locations.

Other Safety Symbols on Your Unit

One or more of the following symbols may also appear on your unit.

Symbol	Meaning
	Direct current
	Alternating current
	The unit is equipped with an earth (ground) terminal.
	The unit is equipped with a protective conductor terminal.
	The unit is equipped with a frame or chassis terminal.
	On (Power)
	Off (Power)
OR	On/off (Power)
	Fuse

Electrical Safety Information

WARNING

If you need to ensure that the unit is completely turned off, disconnect the power cable and remove the battery. For more information on how to remove the battery, see the section about replacing the battery in this user documentation.

WARNING

- **Use the external power supply (USB power adapter) indoors only.**
- **Never connect the unit to the AC mains (with the USB power adapter) when it is used outdoors.**
- **Never connect the unit to a computer with the USB cable when it is used outdoors.**
- **To avoid electrical shock, do not operate the unit if any part of the outer surface (covers, panels, etc.) is damaged.**
- **Only authorized personnel should carry out adjustments, maintenance or repair of opened units under voltage. A person qualified in first aid must also be present. Do not replace any components while the USB cable and battery are connected.**
- **Unless otherwise specified, all interfaces are intended for connection to ES1 circuits only.**
- **Use only the listed and certified USB power adapter provided by EXFO with your unit. It provides reinforced insulation between primary and secondary, and is suitably rated for the country where the unit is sold.**
- **Capacitors inside the unit may be charged even if the unit has been disconnected from its electrical supply.**

CAUTION

- **Position the unit so that the air can circulate freely around it.**
- **When you use the unit outdoors, ensure that it is protected from liquids, dust, direct sunlight, precipitation, and full wind pressure.**

CAUTION

The use of voltages higher than those indicated on the label affixed to your unit may damage the unit.

Equipment Ratings	
Temperature	
➤ Operation	➤ unit powered by battery: –10 °C to 40 °C (14 °F to 104 °F) ➤ unit connected to AC power (with USB power adapter): 0 °C to 40 °C (32 °F to 104 °F)[a]
➤ Storage	➤ unit – short-term storage[b]: –40 °C to 70 °C (–40 °F to 158 °F) ➤ unit – long-term storage[c]: 10 °C to 35 °C (50 °F to 95 °F)
Relative humidity[d]	➤ unit: ≤ 93 % non-condensing ➤ USB power adapter: 10 % to 90 % non-condensing
Maximum operation altitude	➤ 3000 m (9843 ft) (unit connected to external power source) ➤ 4000 m (13123 ft) (unit operated from battery)
Pollution degree	➤ 2 (unit connected to external power source) ➤ 3 (unit operated from battery)[e]

Equipment Ratings	
Overvoltage category	➤ unit: I ➤ USB power adapter: II
Measurement category	Not rated for measurement categories II, III, or IV
Input power[f]	➤ unit: 5 V ⎓; 2 A ➤ USB power adapter: 100 - 240 V ∼; 50/60 Hz; 1 A max

a. When the ambient temperature is below 0 °C (32 °F) or when it reaches or exceeds about 40 °C (104°F), the battery can either charge more slowly than usual, or not charge at all, depending on the internal temperature of your unit.
b. Short-term storage corresponds to the storage of the unit for a maximum of 48 hours.
c. Long-term storage corresponds to the storage of the unit for more than three months.
d. Measured in 0 °C to 31 °C (32 °F to 87.8 °F) range, decreasing linearly to 50 % at 40 °C (104 °F).
e. Equipment must be normally protected against exposure to direct sunlight, precipitation and full wind pressure.
f. Not exceeding ± 10 % of the nominal voltage.

3 Getting Started with Your Unit

Turning on Your Unit

When you turn on the unit for the very first time, you will be prompted to read and accept the EXFO license agreement and set the date and time (see the section about the first startup for more information).

Note: *The settings you modify at startup can be modified later if necessary.*

To turn on the unit:

Press the on/off button until the unit beeps once. The corresponding LED will light up during the startup process (until the splash screen is displayed).

Left side view

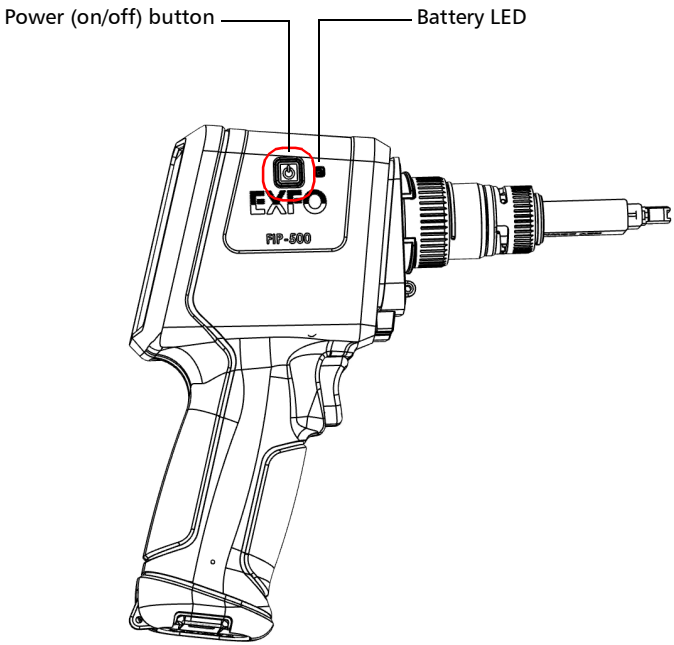

Turning off Your Unit

Unless specified otherwise in this documentation, the settings you configure on your unit are kept in memory even when you turn the unit off.

There are several ways to turn off the unit, including the following:

- *Sleep*: keeps the unit's status information in memory (RAM). The next time you turn your unit on, you will quickly return to your work environment (running applications will still be running). If you intend to leave your unit in sleep mode for more than a few hours, you should perform a shutdown instead to save battery power. After four hours in sleep mode, your unit will go into shutdown mode automatically to save battery power.
- *Shutdown*: completely cuts power to the unit; the unit will perform a complete restart routine the next time you use it. You should perform a shutdown if you do not intend to use your unit for several hours.

  After a shutdown, the unit will start in the **Inspection** screen.

Note: *Should the unit ever stop responding, you can force a hardware reset by pressing and holding down the on/off button for at least 10 seconds. To restart your unit, release the on/off button, and then press it again as you would normally do to start your unit.*

To enter the sleep mode:

Press the on/off button. The unit's backlight will turn off and the touchscreen will be deactivated.

To exit the sleep mode and resume your work:

Press the on/off button or press the trigger.

To turn off the unit completely (shutdown):

Press the on/off button for about three seconds. The unit will beep once and its LED will light up briefly.

Configuring Your Unit at First Startup

The first time you turn on the unit, you are prompted to read and accept the EXFO license agreement and configure the date and time.

Note: *You can change the regional parameters later if necessary.*

Once the configuration is complete, you are presented with a QR code allowing you to download the user documentation to a smart device. You can download the documentation later if you prefer (see *Accessing the Online Documentation From the FIP-500* on page 88).

To configure your unit at first startup:

1. If it is not already done, turn on the unit (see *Turning on Your Unit* on page 17).
2. Read and accept the EXFO license agreement, then tap **Next**.
3. If necessary, configure the date and time by tapping anywhere on the corresponding line. When it is done, tap **Next**.
4. If desired, use the QR code to download the user documentation to your smart device.
5. Tap **Close** when you have finished.
6. If desired, configure a Wi-Fi network allowing you to retrieve the updates, as follows:

   6a. Install the EXFO Basecamp application on your smart device (see *Installing the EXFO Basecamp application on Your Smart Device* on page 46).

   6b. Establish a Bluetooth® connection between the FIP-500 and the smart device (see *Establishing or Closing a Connection With a Smart Device Via the Bluetooth Technology* on page 47).

   6c. Configure a wireless network (see *Working With a Wireless Network* on page 50).

You are now ready to start working with your FIP-500.

Understanding the Inspection Screen

From the inspection screen, you can take captures of connectors under inspection and view these captures. The inspection screen also shows the title bar, which provides information on many elements such as the Bluetooth® connection, Wi-Fi connection and signal strength, as well as battery level.

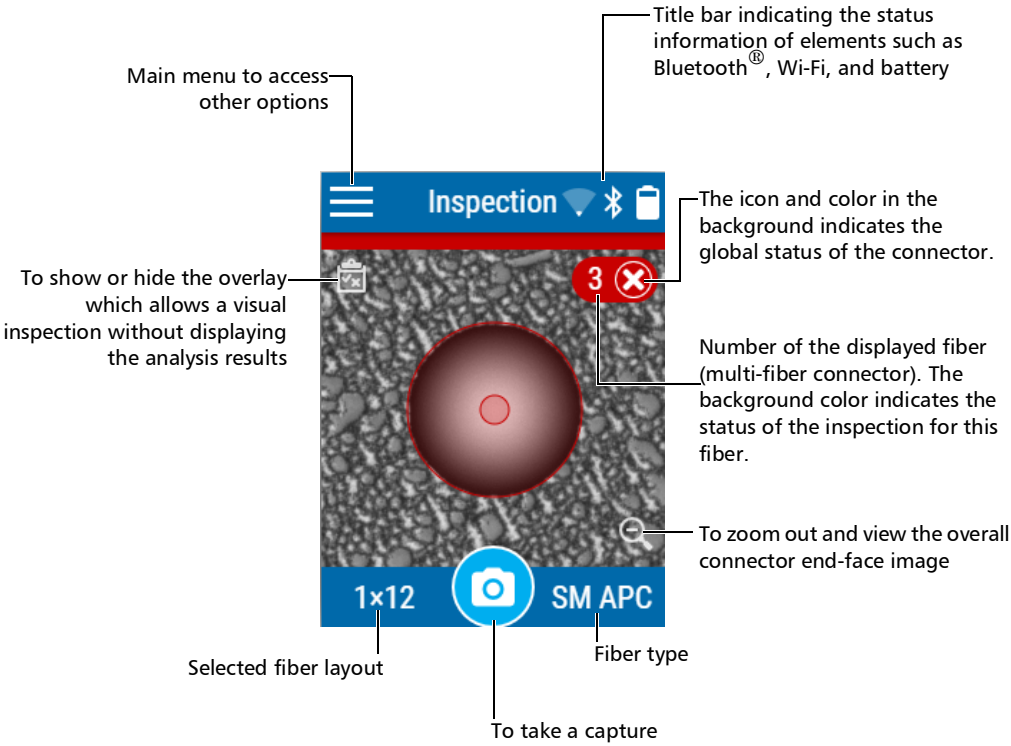

Note: *You can also show or hide the overlay by tapping anywhere in the non-active area (gray background) of the image or directly on the image of the fiber when you view a specific fiber.*

Changing Your Unit's SmartTip

You can change the SmartTip of your unit to better suit your inspection needs.

To change your unit's SmartTip:

1. If necessary, remove the protective cap from the unit.
2. Turn the SmartTip retaining screw counterclockwise (about a quarter turn) until the SmartTip is loose.

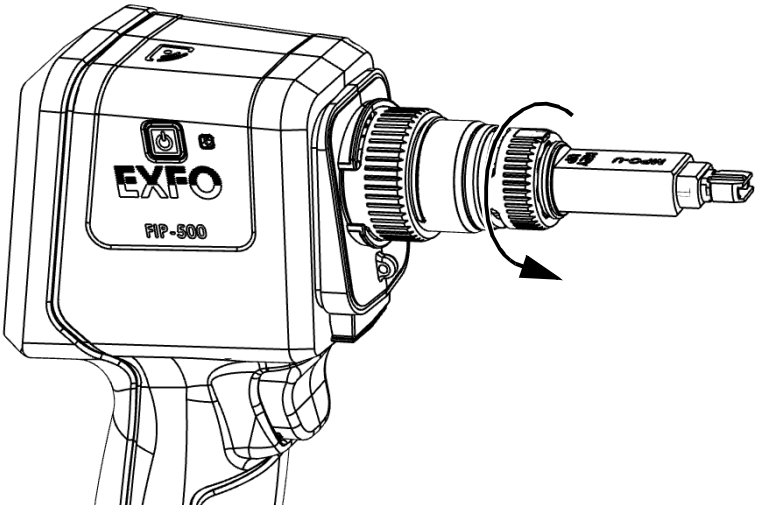

3. Pull on the SmartTip to remove it.

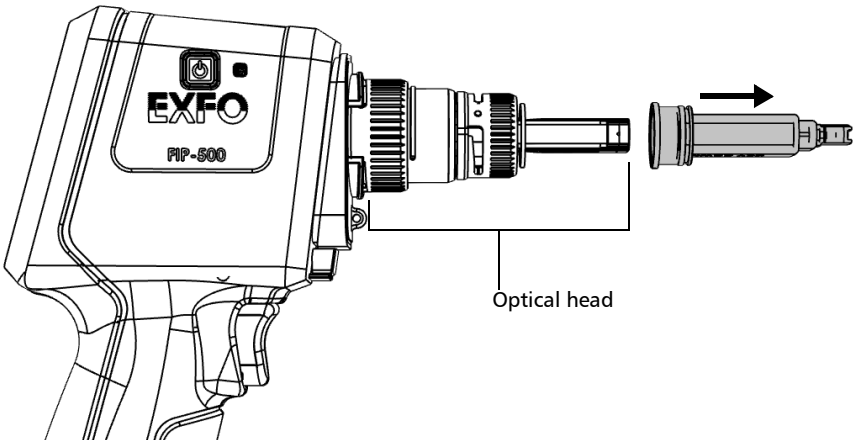

4. Align the new SmartTip with the optical head, and then slide it toward the unit until it stops.

5. Turn the SmartTip retaining screw clockwise (about a quarter turn) to secure the SmartTip in place.

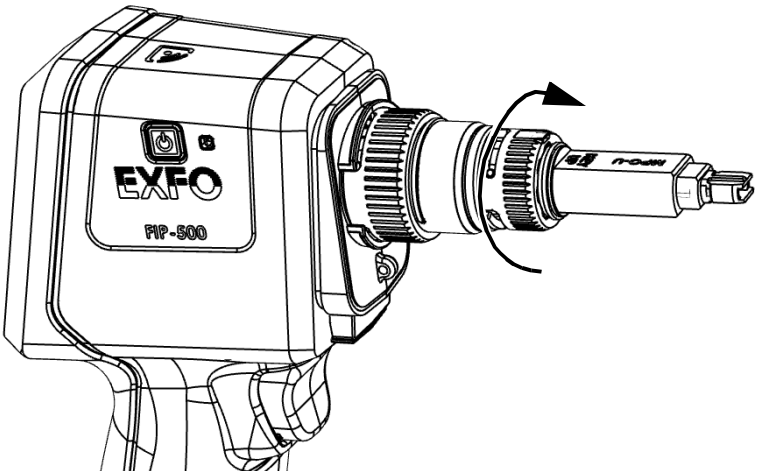

The new SmartTip is now ready to use.

Cleaning and Connecting Optical Fibers

IMPORTANT

To ensure maximum power and to avoid erroneous readings:

- **Always inspect fiber ends and make sure that they are clean as explained below before inserting them into the port. EXFO is not responsible for damage or errors caused by bad fiber cleaning or handling.**
- **Ensure that your patchcord has appropriate connectors. Joining mismatched connectors will damage the ferrules.**

To connect the fiber-optic cable to the port:

1. Inspect the fiber using a fiber inspection scope (or probe). If the fiber is clean, proceed to connecting it to the port. If the fiber is dirty, clean it as explained below.

2. Clean the fiber ends as follows:

2a. Gently wipe the fiber end with a lint-free swab dipped in optical-grade liquid cleaner.

2b. Use a dry swab to dry the connector completely.

2c. Visually inspect the fiber end to ensure its cleanliness.

3. Carefully align the connector and port to prevent the fiber end from touching the outside of the port or rubbing against other surfaces.

   If your connector features a key, ensure that it is fully fitted into the port's corresponding notch.

4. Push the connector in so that the fiber-optic cable is firmly in place, thus ensuring adequate contact.

   If your connector features a screw sleeve, tighten the connector enough to firmly maintain the fiber in place. Do not overtighten, as this will damage the fiber and the port.

Note: *If your fiber-optic cable is not properly aligned and/or connected, you will notice heavy loss and reflection.*

EXFO uses good quality connectors in compliance with EIA-455-21A standards.

To keep connectors clean and in good condition, EXFO strongly recommends inspecting them with a fiber inspection scope (or probe) before connecting them. Failure to do so may result in permanent damage to the connectors and degradation in measurements.

Temperature Management

The internal temperature of your unit will vary with the ambient temperature, but also with the type of tests you perform and their intensity.

In high-temperature conditions, your unit will display warning messages. If the temperature keeps rising and reaches the limit, your unit will turn off as self-protection.

For more information on the effects of temperature on battery charging, see *Power Sources* on page 7.

IMPORTANT

For optimum performance of your unit:

- **Ensure that it remains within the recommended operation and storage temperatures (see *Equipment Ratings* on page 15).**
- **Avoid leaving your unit in an overheated vehicle. You may have to let your unit cool down before being able to use it.**
- **Ensure that your unit is normally protected from direct sunlight (during use and storage).**

4 Setting up Your Unit

Adjusting Brightness

You may want to adjust the display brightness yourself to better fit your work environment or preferences.

You may also want to reduce the display brightness to save battery power (the higher the brightness level, the higher the power consumption).

The brightness value is kept in memory even when you turn the unit off.

To adjust the display brightness:

1. From the main menu, tap **Settings**.

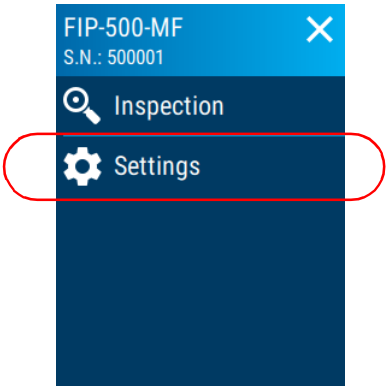

2. Under **Brightness**, tap the dots until the screen appearance is to your liking. You can also tap the desired brightness icon to quickly set the brightness to the minimum or the maximum value.

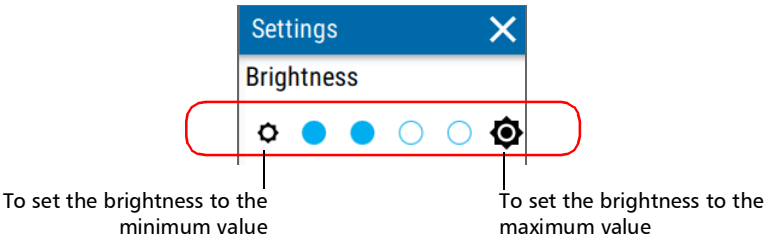

The new brightness value is taken into account immediately.

Adjusting the Date and Time

The date and time are expressed in international format. You can adjust them if necessary.

To adjust the date or time manually:

1. From the main menu, tap **Settings**.

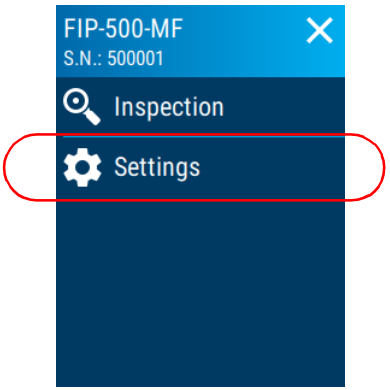

2. Scroll down to the **Unit settings** section.
3. Tap **Date and time**.

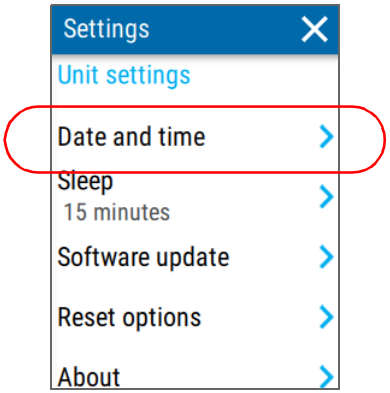

4. Tap the entry corresponding to the element that you want to modify.

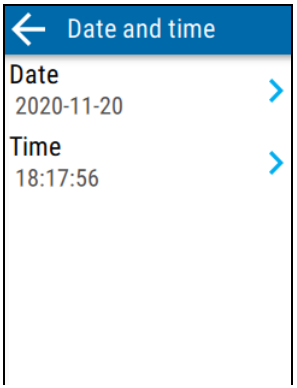

5. Modify the settings according to your needs, and then tap to go back to the **Date and time** screen.

The new values are taken into account immediately.

Configuring Sleep Mode

To help you get the optimum performance out of your unit, it comes with a predefined set of parameters to manage power.

When you do not use your unit for a while, it will go into sleep mode automatically to save power (see *Turning off Your Unit* on page 18).

By default, the duration after which the unit goes into sleep mode is fifteen minutes, but you can select another value.

The value that you set is kept in memory even when you turn the unit off.

IMPORTANT

- **If you intend to leave your unit in sleep mode for more than a day, you should turn it off (shutdown) to save battery power. After 72 hours in sleep mode, your unit will go into shutdown mode automatically to save battery power.**
- **The unit will not enter sleep mode while you perform tests.**

To configure the duration after which the unit enters sleep mode:

1. From the main menu, tap **Settings**.

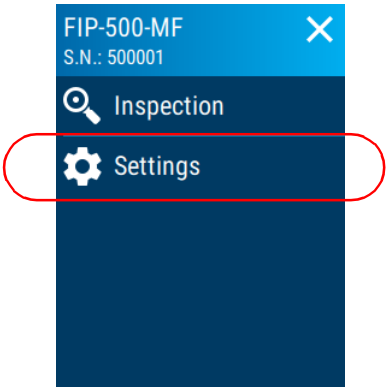

2. Scroll down to the **Unit settings** section.

3. Tap **Sleep**.

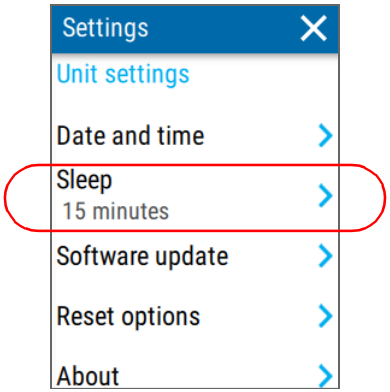

4. Select the desired number of minutes, and then tap to go back to the Date and time screen.

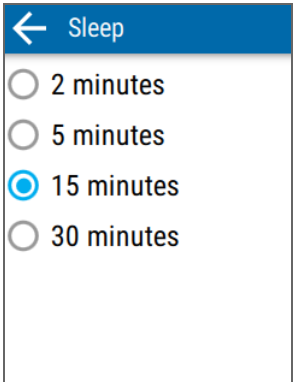

The new value is taken into account immediately.

Reverting to Factory Settings

At any time, you can reset all settings that you have customized, such as the delay before the unit switches to sleep mode, to their default values.

This operation does not affect the current date and time.

To revert values to factory settings:

1. From the main menu, tap **Settings**.

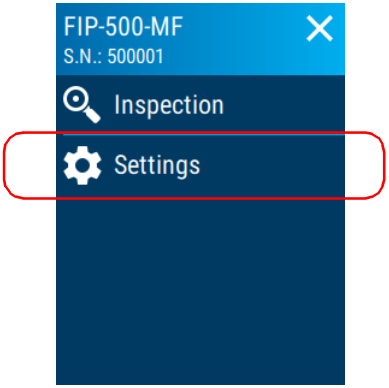

2. Scroll down to the **Unit settings** section.

3. Tap **Reset options**.

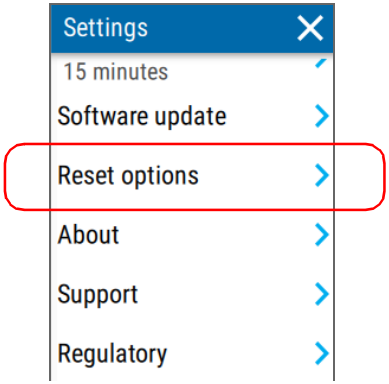

4. Tap **Factory settings**.

5. Tap **RESET** to confirm your choice and start the operation.

5 Inspecting Fiber Ends

You can inspect fiber ends and view the result of this inspection directly on the built-in touchscreen of your unit.

WARNING

Never look directly into a live fiber. It could cause serious eye damage. Always use your FIP-500 Fiber Inspection Scope.

Selecting a Connector Type

Once its initialization is complete, the unit displays the Inspection screen from which you can select the connector type (single- or multi-fiber) for the next capture.

Note: *The single-fiber connector type will be available soon.*

The multi-fiber connector allows you to see multiple fibers at a time. By default, the 1x12 fiber arrangement is selected, but you can select another fiber arrangement that will correspond to the connector you need to inspect. The application displays a graphical representation for each fiber arrangement available. It also displays the used and unused fibers in the connector.

Note: *Only the fibers identified as used will be analyzed.*

To select a connector type:

1. From the **Inspection** view, tap the numbers corresponding to the fiber arrangement.

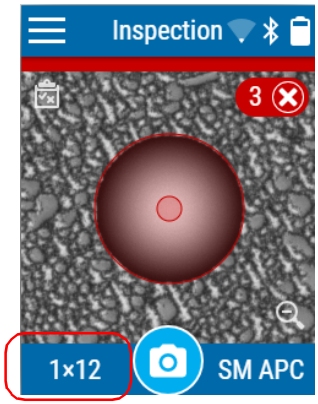

2. In the **Connector type** window, select the type of connector you want to use.

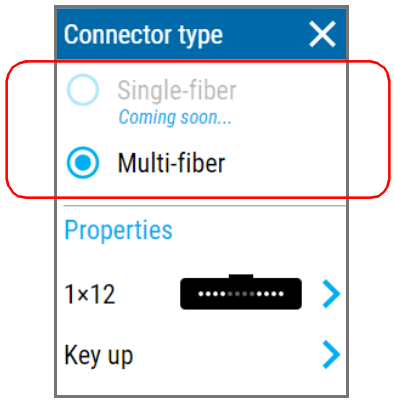

3. If you work with multi-fiber connectors, proceed as follows.

3a. Select the fiber arrangement corresponding to the connector you want to inspect.

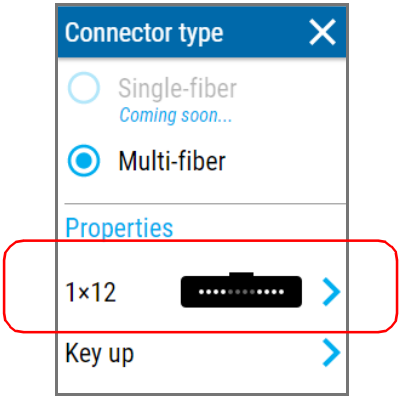

3b. Select the key orientation of the connector.

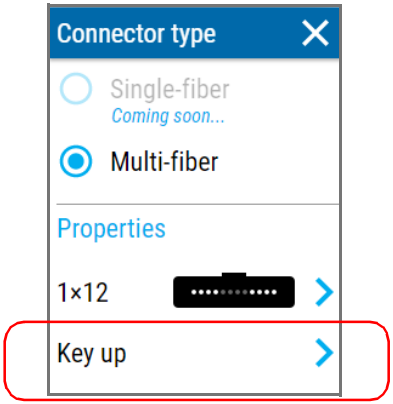

The new settings will be taken into account for the next inspection.

Selecting a Fiber Type

Your unit allows you to inspect singlemode and multimode fiber connectors. To help you identify the type of fiber, the unit lists the typical colors of singlemode and multimode fiber jackets.

The singlemode APC fiber type is selected by default.

Fiber Type	Fiber Core	Comments
Singlemode APC	9 μm	Fiber jacket is yellow.
Multimode OM1	62.5 μm	Modal bandwidth: 200-500 MHz·km. Fiber channel designation: M6. Fiber jacket is orange or slate.
Multimode OM2	50 μm	Modal bandwidth: 500 MHz·km. Fiber channel designation: M5. Fiber jacket is orange.
Multimode OM3	50 μm	Modal bandwidth: 1500-2000 MHz·km. Laser optimized (VCSEL) at 850 nm. Fiber channel designation: M5E. Fiber jacket is aqua.
Multimode OM4	50 μm	Modal bandwidth: 3500-4700 MHz·km. Laser optimized (VCSEL) at 850 nm. Fiber channel designation: M5F. Fiber jacket is aqua or violet.
Multimode OM5	50 μm	Modal bandwidth: 3500-4700 MHz·km. Wideband multimode from 850-953 nm. Fiber jacket is violet or lime green.

To select the fiber type:

1. From the **Inspection** view, tap the fiber type.

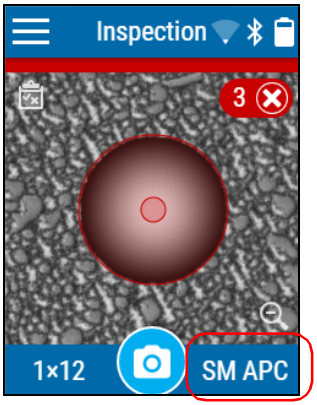

2. In the **Fiber type** window, select the desired type of fiber. If you are not sure whether your setup uses singlemode or multimode fiber, you can have a look at the color chart displayed on the screen.

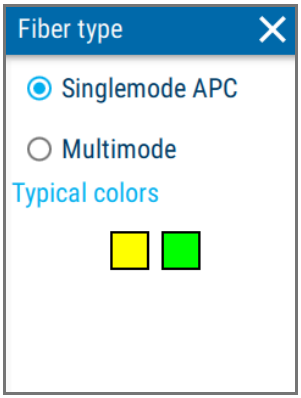

The new settings will be taken into account for the next inspection.

Inspecting Multi-Fiber Ends

The multi-fiber inspection allows you to see multiple fibers at a time.

Before beginning to inspect fiber ends, you must first ensure that the SmartTip installed on your unit corresponds to the type of connector that you need to inspect. You must also select the proper fiber type (singlemode APC or multimode) in the application.

During the capture and analysis process, the application assigns a number to each fiber identified, active or not, according to the selected fiber arrangement.

Note: *If the environment in which you must perform the inspection is dark, you can use the flashlight feature to help you locate the connectors. For more information, see* Enabling or Disabling the Flashlight *on page 44.*

To inspect multiple fiber ends:

1. Ensure that the proper SmartTip is installed on your unit (see *Changing Your Unit's SmartTip* on page 21).
2. Select the desired connector type, including the fiber arrangement and key orientation. For more information, see *Selecting a Connector Type* on page 35.
3. Select the desired fiber type. For more information, see *Selecting a Fiber Type* on page 38.
4. Clean the connector properly.
5. Once you are satisfied with the inspection, tap .

   OR

   Pull the trigger located on the handle of the unit.

The inspection results are displayed on screen. For more information on navigation through captures, see *Navigating Through Multi-Fiber Captures* on page 41. For more information on the overlay, see *Displaying or Hiding the Overlay* on page 43.

Navigating Through Multi-Fiber Captures

When you inspect multi-fiber connectors, once the analysis is complete, the application displays a global view of the connector (where several fibers are visible at a time). It allows you to have an overview of the inspection results as well as a way to localize any debris that could be located outside the perimeter of the fibers themselves.

From this global view, you can access the detailed capture of any of the inspected fibers that are part of the connector, and vice versa.

From the capture of a specific fiber, you can view, in turn, the captures of the other inspected fibers.

To switch from one fiber row to the other (multi-row fiber arrangements):

Swipe up or down on the screen.

To scroll through the inspection results:

Swipe left or right on the screen.

To access the detailed capture of any of the inspected fibers:

From the global view, tap, the image of the fiber (small circle) or the number corresponding to the desired fiber.

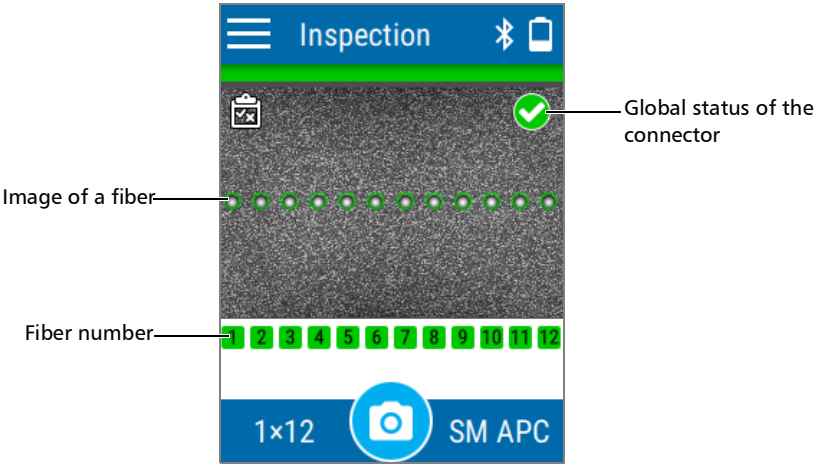

To access the global view:

From the detailed capture view, tap the icon.

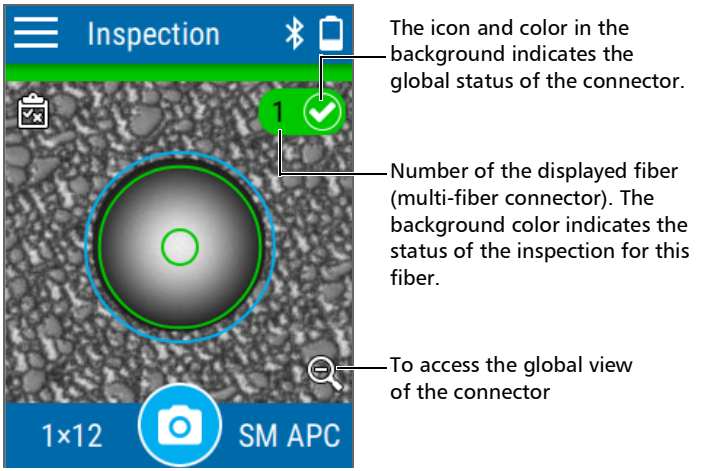

Displaying or Hiding the Overlay

The overlay is shown by default after an analysis. The application displays a circle around each of the active fibers.

The overlay shows the status of the analysis, the status per zone, the analysis zones and any anomaly (defects and scratches) found on the fiber endface. The different regions on a fiber such as the core, the cladding and the adhesive are represented with circles.

The color of the circles shows the status of the analysis zone:

- green: pass
- red: fail
- gray: no analysis could be performed

The overlay applied on a specific fiber in a multi-fiber connector is independent from the overlay of the whole connector. You can show or hide the overlay from the global connector view (where several fibers are visible at a time) or from the view showing a specific fiber.

To display or hide the overlay:

Tap the icon.

OR

Tap either anywhere in the non-active area (gray background) of the image or directly on the image of the fiber when you view a specific fiber.

Enabling or Disabling the Flashlight

Your unit comes equipped with a dual-function LED that can serve as a flashlight to help you locate the connectors. This is particularly useful when the environment in which you must perform the inspection is dark.

To enable or disable the flashlight:

1. From the main menu, tap **Settings**.

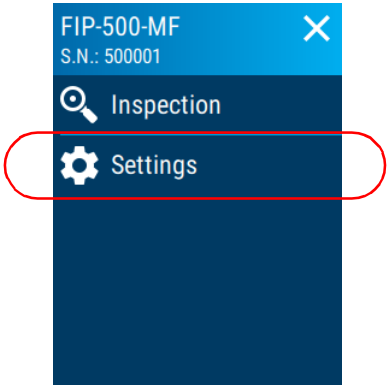

2. With the **Flashlight** toggle, enable or disable the corresponding feature.

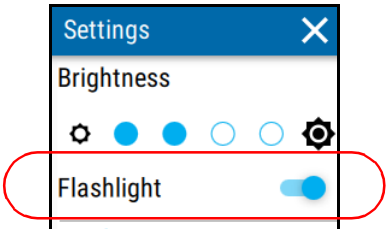

3. Close the **Settings** page to return to the **Inspection** view.

6 Working with the EXFO Basecamp Application

You can use your FIP-500 in association with a smart device equipped with the EXFO Basecamp application allowing you to document your results, archive them on a cloud server, and generate reports.

Note: *In addition to all the other features explained throughout this documentation, you also have access to the features presented hereafter if you work with EXFO Basecamp jobs.*

Note: *The EXFO Basecamp application gives you access to certain features even if you do not log on to your EXFO Basecamp account. However, to benefit from all the available features, you will need to log in. The procedures presented throughout this user documentation will indicate if a logon is required.*

At any time, you can switch from local measurements (that are not part of an EXFO Basecamp job) to measurements within an EXFO Basecamp job. All the measurements are kept in memory.

Note: *Depending on the type of smart device you are using, the appearance of the FIP-500 tool (available from the EXFO Basecamp application) may vary slightly from the illustrations presented in this documentation. Unless otherwise specified, the information applies both to the Android- and iOS-based smart devices.*

Installing the EXFO Basecamp application on Your Smart Device

Before you start working, if you intend to generate reports (single or multiple measurements), work with jobs, or retrieve the firmware and software updates for your unit, you will need to install the EXFO Basecamp application on your smart device.

To install the EXFO Basecamp application:

1. Ensure that you have access to an Internet connection.
2. From your Android-based smart device, open the Google Play Store (usually **Play Store** or **Play** icon).

   OR

   From your iOS-based smart device, open the App Store (usually **App Store** icon).
3. From the Play Store or the App Store, search for *EXFO* or *Basecamp Mobile* to localize the EXFO Basecamp application.
4. Start the installation and follow the on-screen instructions.

Establishing or Closing a Connection With a Smart Device Via the Bluetooth Technology

When you want to work with EXFO Basecamp jobs, perform tasks such as generate reports (single or multiple measurements), or configure Wi-Fi networks to receive updates for your unit, interactions are necessary between the unit and a smart device equipped with the EXFO Basecamp application. These interactions are accomplished using the Bluetooth® technology. By default, the Bluetooth® communication is enabled on your unit, but if you have disabled it, you must enable it before trying to connect to a smart device (see *Enabling or Disabling the Wireless Communication* on page 49).

On your FIP-500 unit, the status of the Bluetooth® communication is indicated with an icon in the title bar. The table below shows the possibilities.

Icon	Meaning
Not visible	The Bluetooth® communication is disabled.
	The Bluetooth® communication is enabled, but no connection has been established yet between the unit and a smart device.
	A connection has been established between the unit and a smart device.

If a connection has been established with a smart device already, but you wish to use your unit with another smart device, you can close the current connection directly from your unit. Similarly, if a connection exists already,

but you wish to connect a smart device to another FIP-500 unit, you can close the connection from the smart device (FIP-500 tool in the EXFO Basecamp application).

To establish a connection via the Bluetooth® technology:

1. If necessary, enable the Bluetooth® communication on your unit (see *Enabling or Disabling the Wireless Communication* on page 49).
2. If it is not already done, install the EXFO Basecamp application on your smart device (see *Installing the EXFO Basecamp application on Your Smart Device* on page 46).
3.
4.

The application establishes the communication automatically. When the connection is successful, the icon appears in the title bar of your FIP-500 unit.

Note: *If the FIP-500 unit that you want to use is already connected to another smart device, you must first close the connection between the FIP-500 unit and the other smart device before being able to connect to this specific FIP-500.*

To close the connection with a smart device from your unit:

1.

2.

To close the connection with an FIP-500 from a smart device:

1.

2.

The smart device is no longer connected to the FIP-500 and you are ready to connect it to another unit.

Enabling or Disabling the Wireless Communication

The interactions between your unit and a smart device are accomplished using the Bluetooth® technology.

The interactions between your unit and the cloud server as well as the EXFO update server (to retrieve firmware and software updates), are accomplished using a connection to a wireless network.

By default, the Bluetooth® communication is enabled on your unit, but the Wi-Fi is not.

You can enable or disable the Bluetooth® communication from your unit only, and the Wi-Fi communication both from your unit and from the smart device (FIP-500 tool in the EXFO Basecamp application).

If you do not need to connect to a wireless network for a certain period of time, you may wish to disable the Wi-Fi communication to save battery power.

To enable or disable the wireless communication from your unit:

1.

2.

The changes are taken into account immediately.

To enable or disable the Wi-Fi communication from the smart device:

1.

2.

The change is taken into account immediately.

Working With a Wireless Network

Note: *You need a smart device equipped with the* EXFO Basecamp *application to configure a wireless network to which your unit will be able to connect later.*

By connecting your unit to a wireless network, you can fully synchronize the results and save them to the cloud server once they have been synchronized with the EXFO Basecamp application.

Also, by connecting your unit to a wireless network, you can check for updates, download these updates and install them directly on your unit (see *Upgrading Applications and Firmware* on page 79).

By default, the Wi-Fi connection is disabled, both on the FIP-500 unit and in the FIP-500 tool of the EXFO Basecamp application. You must enable it before trying to connect to a wireless network (see *Enabling or Disabling the Wireless Communication* on page 49).

Before being able to connect your unit to a Wi-Fi network, you must first configure the desired networks with the EXFO Basecamp application.

Once the configuration and first connection are successful, the configured network is automatically added to the list of possible networks on your unit.

The list of configured networks as well as the last network used are kept in memory even when you turn your unit off. This means that the next time you work with your unit, it will automatically connect to the last network used, unless this network is not available or its password has changed in

the meantime (reconfiguration necessary). Should a network failure occur while the unit is connected to it, the unit will try to reconnect to this network automatically as soon as it becomes available again.

You can remove configured networks from the list to prevent automatic connections to these networks. If you remove the network currently in use, the unit (or the FIP-500 tool in the EXFO Basecamp application) will try to connect to the next configured network on the list that is available.

Your unit supports IPv4 wireless routers having the following characteristics:

- With dynamic IPv4 address assignment
- Not secured, or secured with WPA/WPA2-Personal standards (WPA-PSK/WPA2-PSK versions)
- Broadcasting their network names (SSID) or not (SSID visible or hidden)
- Configured with a 2.4 GHz Wi-Fi band (b/g/n frequencies).

Note: *Your unit does not support the WEP and WPS standards.*

Note: *Your unit does not support public Wi-Fi hotspots requiring authentication from a Web page.*

Note: *Every work environment has its own specifications. If you need information about the configuration of your router, contact your network administrator.*

Note: *To save battery power, you may wish to disable the wireless communication when you do not use it.*

The information about the Wi-Fi connection is indicated with an icon appearing both in the title bar (on your unit) and next to the name of the wireless networks (on your unit and in the EXFO Basecamp application). The table below shows the possibilities.

Icon	Meaning
No Wi-Fi icon visible in the title bar	The Wi-Fi communication is disabled.
Faint Wi-Fi icon visible in the title bar	The Bluetooth® communication is enabled, but the unit is not connected to any wireless network.
	The portion of the icon that appears in white (title bar) or in dark grey (list of wireless networks) reflects the strength of the signal.
	Password-protected (secured) networks are identified by a lock.

Configuring a Wireless Network

Before being able to connect your unit to a Wi-Fi network, you must first configure the desired networks with the EXFO Basecamp application. Once the configuration and first connection are successful, the configured network is automatically added to the list of possible networks on your unit.

The list of configured networks as well as the last network used are kept in memory for future use even when you turn your unit off.

IMPORTANT

You must first establish a Bluetooth® connection between your unit and a smart device before attempting to configure a Wi-Fi network.

To configure a wireless network:

1. Ensure that a Bluetooth®connection has already been established between your unit and a smart device (see *Establishing or Closing a Connection With a Smart Device Via the Bluetooth Technology* on page 47).
2. If necessary, enable the Wi-Fi communication on your unit (see *Enabling or Disabling the Wireless Communication* on page 49).
3.
4.

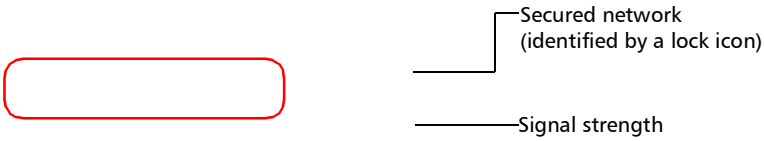

The application establishes the communication automatically.

Note: *Ensure that the EXFO Basecamp application has been able to establish a first connection with the Wi-Fi network before attempting to connect to this network from your FIP-500 unit. This is particularly useful in the case of secured networks to ensure that the provided password is good.*

Connecting to a Wireless Network From Your Unit

When you start a new work session with your unit, it will automatically connect to the last network used, unless this network is not available or its password has changed in the meantime (reconfiguration necessary). Should a network failure occur while the unit is connected to it, the unit will try to reconnect to this network automatically as soon as it becomes available again.

To connect to a wireless network from your unit:

1. Ensure that a connection has already been established between your unit and a smart device via the Bluetooth® technology (see *Working With a Wireless Network* on page 50).
2.
3.

Network to which the unit is currently connected or network used during the last work session

The application establishes the communication automatically.

Note: *If you select a network different than the one used during your last work session and the connection to this new network fails, the application will automatically switch to the last network used to try and establish a connection.*

Removing Configured Networks From the List

You can remove configured networks from the list to prevent automatic connections to these networks (forget network feature). If you remove the network currently in use, the unit (or the EXFO Basecamp application) will try to connect to the next configured network on the list that is available.

On your unit, removed networks are no longer visible unless you reconfigure these networks from the EXFO Basecamp application. In EXFO Basecamp, if these networks are still in range, they will reappear on the list of available networks as if they have never been configured before. This means that for secured networks, their passwords will need to be re-entered if you decide to reconfigure these networks.

To remove a configured network from the list:

1.

2.

Note: *In the FIP-500 tool (in EXFO Basecamp application), the main menu is accessible by opening the three-dot menu.*

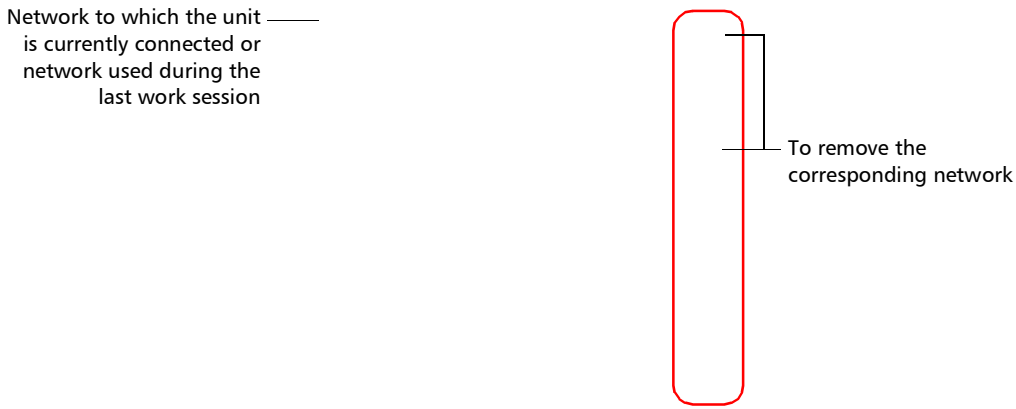

The network is removed from the list automatically.
In the EXFO Basecamp application, if these networks are still in range, they will reappear on the list of available networks, at the bottom of the page.

EXFO Basecamp application

Removed networks that are still in range appear here

Accessing the Online Documentation From the Smart Device

You can access the getting started guide from your unit.

For more detailed information, you can also access the user guide at all times from your smart device:

- by scanning the QR code displayed on your unit
- by using the corresponding link in the EXFO Basecamp application

To view the user documentation from the EXFO Basecamp application:

1. If it is not already done, establish a connection between your unit and a smart device (see *Establishing or Closing a Connection With a Smart Device Via the Bluetooth Technology* on page 47).
2.
3.

7 Maintenance

To help ensure long, trouble-free operation:

- Always inspect fiber-optic connectors before using them and clean them if necessary.
- Keep the unit free of dust.
- Clean the unit casing and front panel with a cloth slightly dampened with water.
- Store unit at room temperature in a clean and dry area. Keep the unit out of direct sunlight.
- Avoid high humidity or significant temperature fluctuations.
- Avoid unnecessary shocks and vibrations.
- If any liquids are spilled on or into the unit, turn off the power immediately, disconnect from any external power source, remove the batteries and let the unit dry completely.

WARNING

The use of controls, adjustments and procedures, namely for operation and maintenance, other than those specified herein may result in hazardous radiation exposure or impair the protection provided by this unit.

Cleaning Lenses

Keeping your unit's lenses clean and free of dust will ensure that you get the optimum performance out of your unit. The following recommendations will help you with the cleaning process:

- With a filtered air blower or a soft bristled brush, remove as much dust and dirt as possible.
- Apply a few drops of cleaning solution, which is used to clean camera lenses, on a lens tissue, a cleaning cloth or a lint-free swab. The lens cleaning solution especially manufactured by camera lens manufacturers can be used safely. Reagent grade isopropyl alcohol as well as deionized water can also be used safely.
- Gently remove oil, fingerprints and grime from the lens surface, using a circular motion from the center outwards.

To clean lenses:

1. If necessary, turn off your unit and remove the protective cap.
2. Turn the SmartTip retaining screw counterclockwise (about a quarter turn) until the SmartTip is loose.

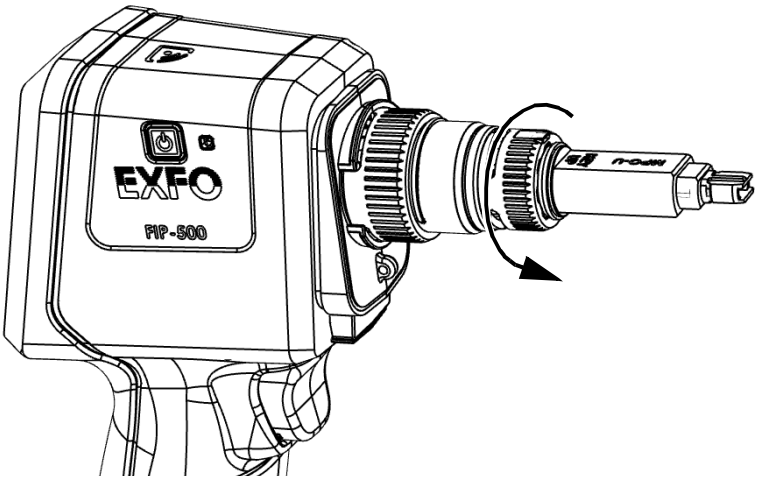

3. Pull on the SmartTip to remove it.

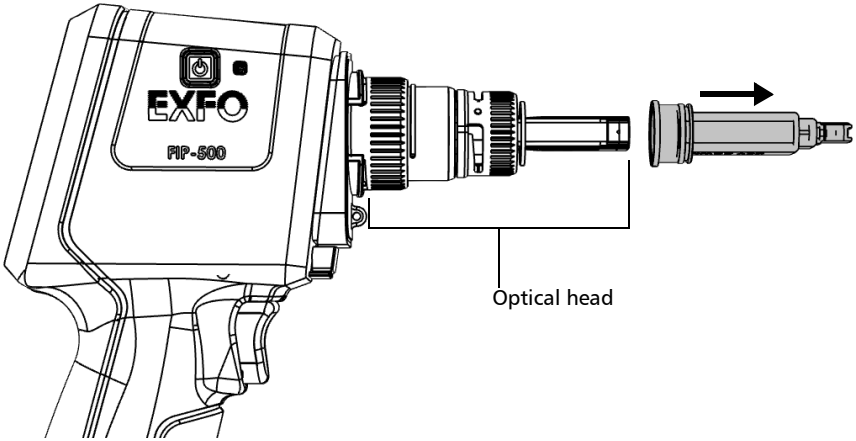

4. Clean the lens that is located at the end of the optical head.

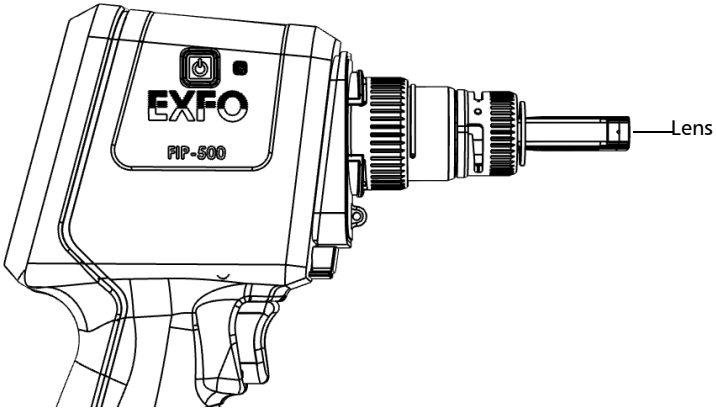

5. Using a lint-free swab, clean the inner part of the lens that is located at the end of the optical head.

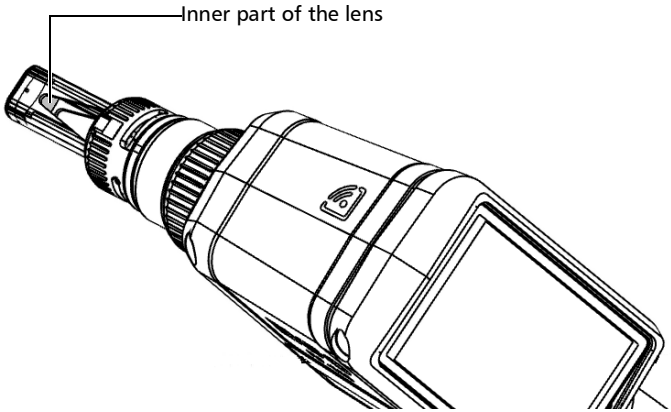

6.

7.

8.

9.

10.

11.

Cleaning the Touchscreen

Clean the touchscreen with a soft, non-abrasive cloth, such as one used for cleaning reading glasses, dampened with water.

CAUTION

Using anything else than water can damage the special coating of the touchscreen.

Battery Maintenance Recommendations

WARNING

Your unit uses the following type of batteries: Smart lithium-ion (Li-ion) or lithium-polymer (Li-Po).

These are batteries with built-in protection that have been especially designed for EXFO. For this reason, you can only replace them with EXFO-approved batteries of the same type and model.

WARNING

The use of unapproved batteries may result in the batteries expanding or igniting (that is, catching fire).

WARNING

Risk of explosion if battery is replaced by an incorrect type. Dispose of used batteries according to the manufacturer's instructions.

WARNING

Do not throw batteries into fire or water and do not short-circuit their electrical contacts. Do not disassemble.

IMPORTANT

Recycle or dispose of used batteries properly, in accordance with local regulations. Do not dispose of them in ordinary garbage receptacles. For more information, see the section about recycling and disposal in this user documentation.

- At EXFO, we take the safety of our customers very seriously and want to make sure any battery replacement is done properly.

  The batteries of all EXFO-branded products are tested, certified, and in compliance with these international safety standards:

  - United Nations (UN) Transport Regulations UN38.3: Covers battery safety during air transport.
  - UL 61010-1, CAN/CSA C22.2 61010-1 and International Standard IEC/EN 61010-1: Covers the use of batteries for test and measurement equipment.
  - International Standard IEC 62133: Covers secondary cells and batteries containing alkaline or other non-acid electrolytes.
  - In some countries, when required, EXFO-approved batteries have been certified and are marked as per local regulation.
- To get pricing and correct part number for replacement batteries for your products, please contact (via email):
  - For Americas: Isales.us@exfo.com
  - For Europe: Isales.emea@exfo.com
  - For APAC: Isales.apac@exfo.com
  - For China: Isales.China@exfo.com
- You may also obtain replacement batteries for your products by contacting your local distributor:

  https://www.exfo.com/en/how-to-buy/find-distributor
- Your may return your unit for service at your local service center:

  https://www.exfo.com/en/services/field-network-testing/exfo-service-centers/

Recharging the Battery

Your unit uses one smart lithium-ion (Li-ion) or one lithium-polymer (Li-Po) battery.

- The charge status is shown in the upper right corner of the title bar. A red icon indicates that the battery level is running low and that you should connect the unit to a power outlet. For more information, see *Battery Status Icon Description* on page 6.
- The unit also indicates the charge status with the LED on its side (see *LED Indicators Description* on page 4).

CAUTION

Only charge the battery with the USB power adapter provided by EXFO with your unit.

You can purchase new batteries from EXFO.

IMPORTANT

- The battery is not charged at the factory. You must fully charge it before using the unit for the first time. The battery is fully charged after a few hours or when the battery LED indicator is steady blue.
- The time required to charge the battery depends on various factors such as the type of tests currently performed and the ambient temperature.
- To ensure that the battery functions properly, keep it in temperatures between –10 °C and 45 °C (14 °F and 113 °F). Store it between 10 °C to 35 °C (50 °F to 95 °F).
  When the ambient temperature is below 0 °C (32 °F) or when it reaches or exceeds about 40 °C (104°F), the battery can either charge more slowly than usual, or not charge at all, depending on the internal temperature of your unit.
- Do not leave a battery discharged for several days.
- After 300 cycles (approximately 18 months of use), you may want to replace the battery with a new one to maintain optimal operation conditions. Otherwise, the operating time might be reduced.

IMPORTANT

- If you need to store the unit (or a battery) for an extended period of time, ensure that the battery is charged at around 50 % of its capacity, and then turn the unit off (shutdown).
- Place the unit (or the battery) in a cool dry place, and ensure that the battery is charged at around 50 % of its capacity. Every three months during the storage period, verify the battery level. Recharge the battery when necessary, so that its charge level remains around 50 % of the total capacity. This will ensure that you get the optimum performance out of the battery.

To recharge the battery:

Connect the unit to a power outlet using the USB power adapter (fastest way to charge the battery).

Note: *The standard USB ports of a computer cannot power your unit or charge its battery while the unit is on. If you connect your unit to such a USB port with the USB cable, the unit will still consume battery power. If the unit is off when you connect it to the USB port of a computer, its battery could charge, but slowly.*

Note: *If you have a vehicle equipped with dedicated USB charging ports, you could connect your unit to one of these ports to charge the battery. The actual results will vary with each vehicle. You could also use a certified USB power bank (portable charger) to charge your unit.*

The charge cycle will start and end automatically.

Replacing the Battery

Your unit can be powered either by battery or from an appropriate power outlet when used with the provided USB power adapter.

WARNING

- **Your unit uses a smart lithium-ion (Li-ion) or lithium-polymer (Li-Po) battery with built-in protection that has been especially designed for EXFO. For this reason, you can only replace it with batteries of the same type and model. The use of other batteries may damage your unit and compromise your safety.**
  You can purchase new batteries from EXFO.
- **Battery replacement should only be done by a qualified technician with the appropriate tools on an electronic bench or similar environment.**

For more information on the available power sources for your unit, as well as their characteristics, refer to the *Technical Specifications* of your product.

CAUTION

Electrostatic discharge (ESD) damage can cause complete or intermittent equipment failures.

- **Always use an ESD-preventive wrist or ankle strap when replacing the battery. Ensure that the antistatic strap makes good skin contact and that the end of its wire is grounded properly.**
- **Never touch any component inside the unit other than those identified in the procedure hereafter, either with tools or your fingers.**

To replace the battery:

1. Turn off the unit (shutdown) and disconnect USB cable (if applicable).
2. Position the unit so that its side panel with the on/off button rests on a flat surface such as a table.
3. On the case of the unit, using a 2.5 mm hex socket screwdriver, turn the screws (6) counterclockwise until they are loose, and remove them.

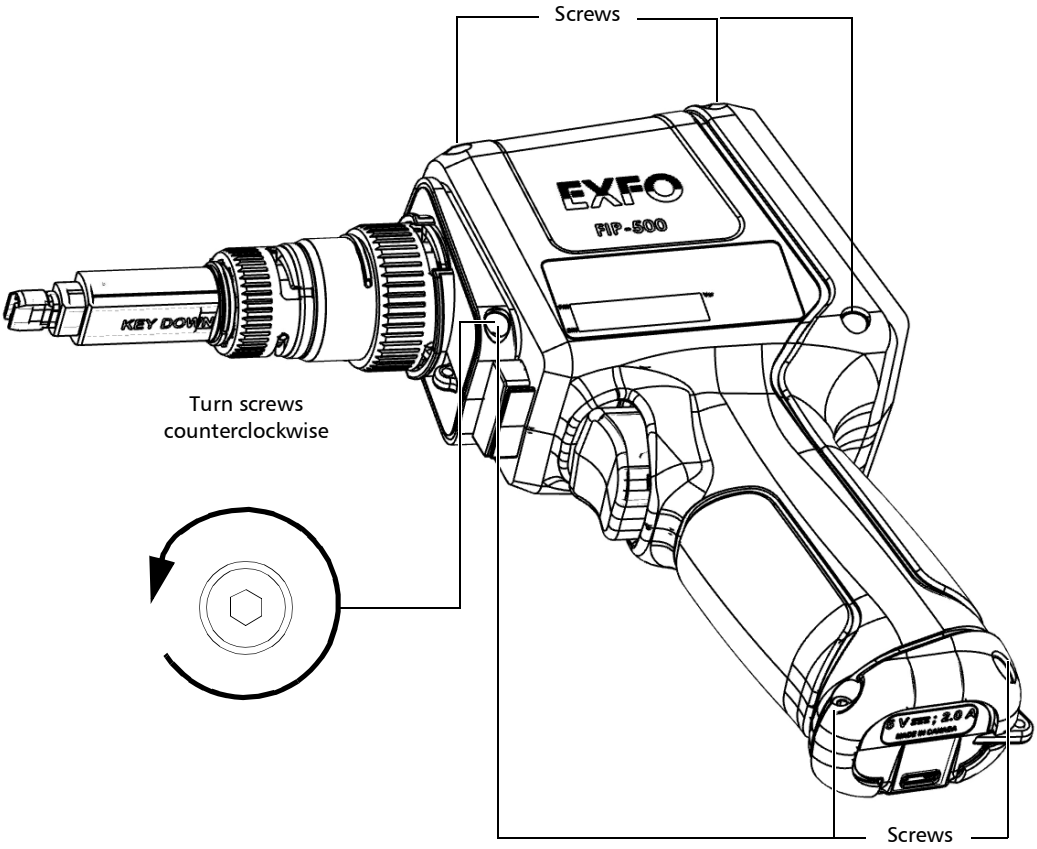

4. Hold the cover by its sides and pull it up to remove it.

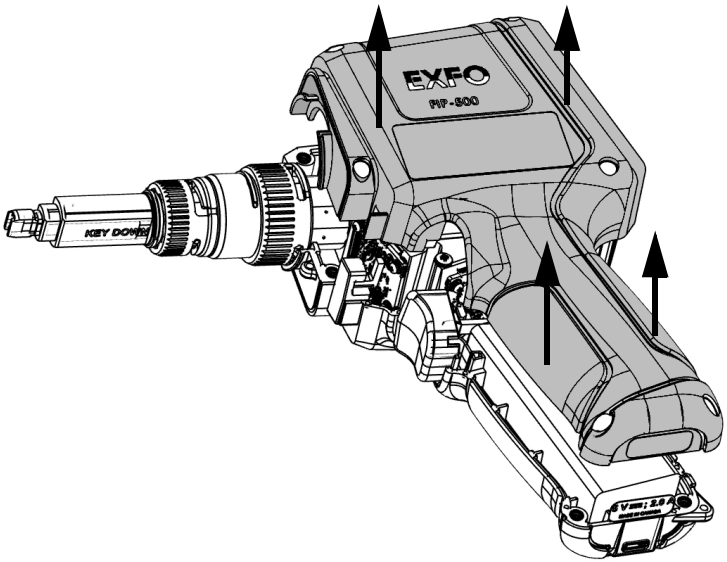

5. Gently pull on the battery's connector to disconnect it from its socket.

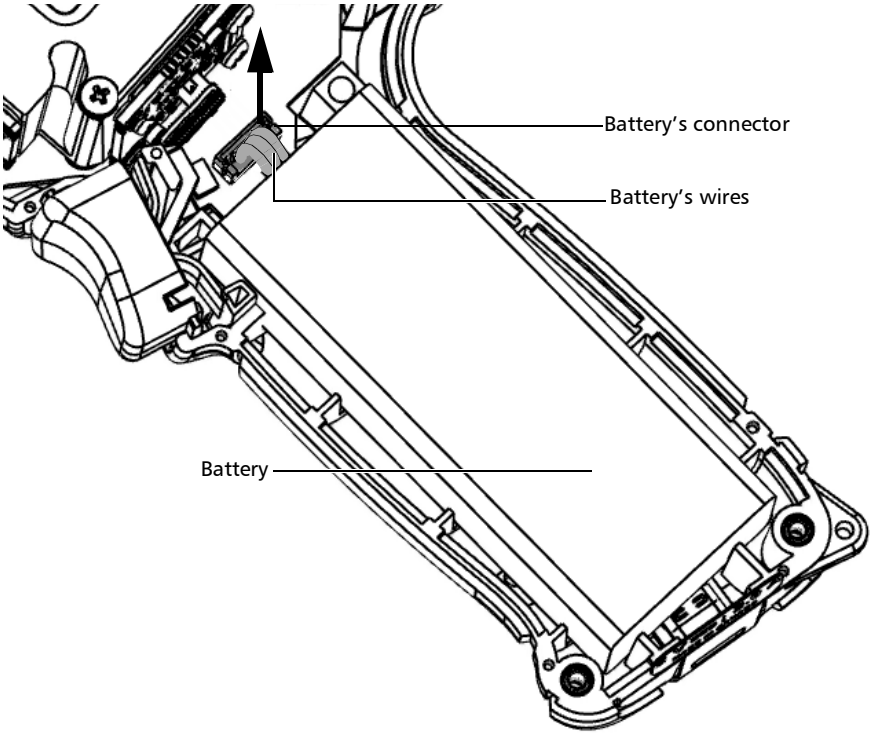

6. Pull the battery up to remove it.

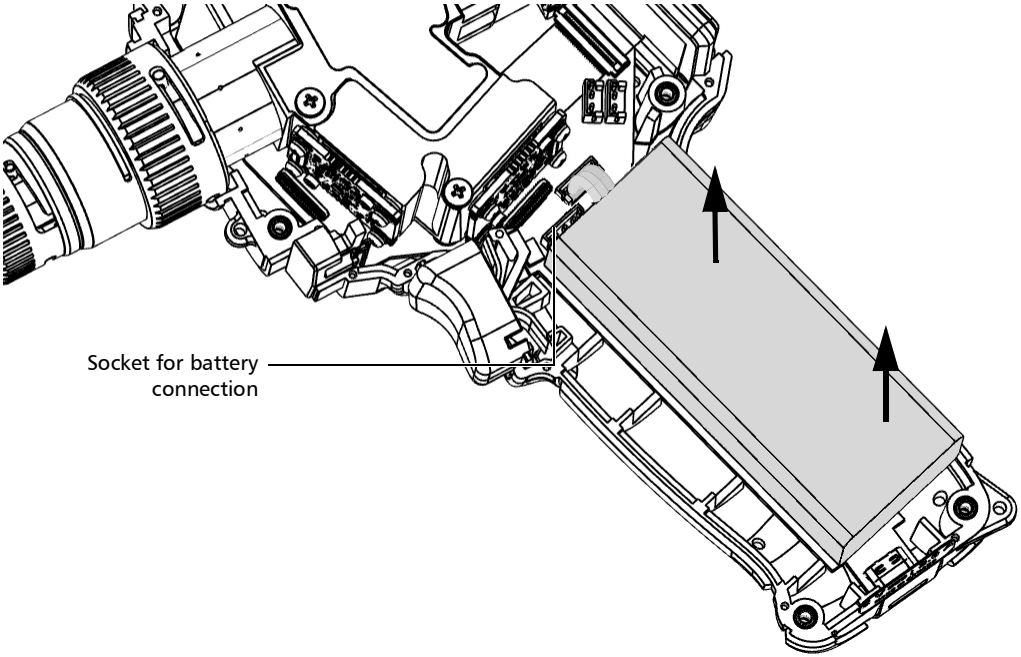

7. Place the new battery so that its wires and connector are located on the same side as the socket in your unit's case. The battery's connector should be facing down.

8. Push the new battery toward the bottom of the case until it stops.

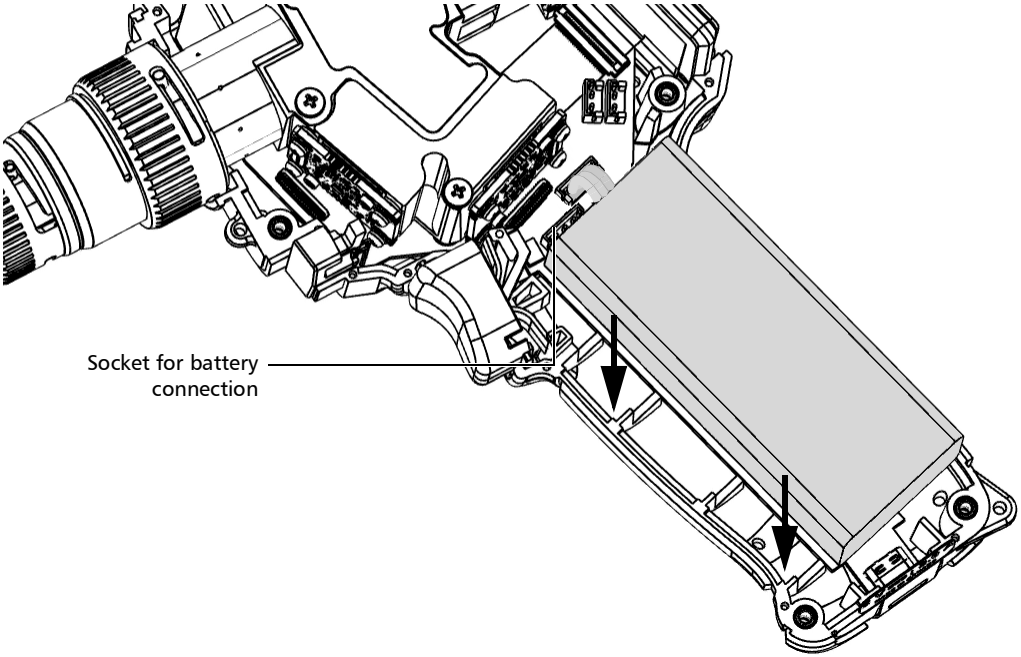

9. Connect the battery's connector to the corresponding socket.

10. Carefully place the side panel back on the unit, making sure that it is aligned properly with the other side of the unit and that the trigger has not moved. There should be no gap between both sides of the unit. If necessary, slightly move the side panel until alignment is correct.

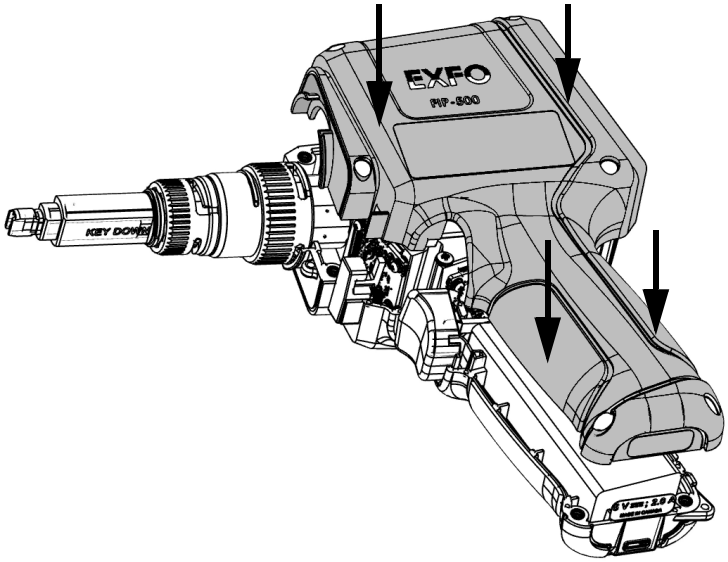

11. Using a 2.5 mm hex socket screwdriver, turn the screws (6) clockwise until they are tightened.

This will secure the side panel into place.

IMPORTANT

- **If the battery LED turns to red when you turn on the unit, simply connect the unit to a power outlet and let the new battery charge for a few minutes.**
- **It could take a few charge/discharge cycles before the batery LED indicator and the on-screen battery status icon reflect the actual power level of the new battery.**

Upgrading Applications and Firmware

Note: *You need a smart device equipped with the EXFO Basecamp application to be able to configure a wireless network, connect your unit to it, and then receive the available updates.*

All the necessary applications have been preinstalled and configured at the factory. However, you may have to upgrade some of them or upgrade the firmware when new versions become available.

Your unit allows you to check for updates, download these updates and install them directly.

Note: *Your unit must have access to an Internet connection (via Wi-Fi) to be able to download updates and install them.*

IMPORTANT

For a trouble-free upgrade, ensure that you connect your unit to a power outlet and that your unit remains on during all the process.

To upgrade applications or firmware:

1. Connect your unit to an external power source with the provided USB power adapter.
2. If it is not already done, turn on your unit.
3. Ensure that your unit has access to the Internet (see *Working With a Wireless Network* on page 50).
4. Follow the on-screen instructions. If an update is available and you choose to install it, your unit will restart automatically at the end to complete the process.

Recycling and Disposal

This symbol on the product means that you should recycle or dispose of your product (including electric and electronic accessories) properly, in accordance with local regulations. Do not dispose of it in ordinary garbage receptacles.

For complete recycling/disposal information, visit the EXFO Web site at www.exfo.com/recycle.

8 Troubleshooting

Solving Common Problems

Problem	Possible Cause	Solution
My unit does not start.	The battery is completely discharged (if the battery level allows it, the unit's LED will remain red for about 10 seconds when you try to turn on the unit).	Connect the unit to an external power source to recharge the battery. If the battery is no longer charging properly, you may need to replace it with a new one (see *Replacing the Battery* on page 72).
	The system has encountered a problem.	Press the on/off button for at least ten seconds to force a hardware reset on the unit. If the problem persists, restore your unit to normal operation (see *Restoring Your Unit to Normal Operation* on page 85).
	Some files essential to the normal operation of the unit have been corrupted.	Press the on/off button for at least ten seconds to force a hardware reset on the unit. If the problem persists, try resetting the FIP-500 to its factory settings (see *Reverting to Factory Settings* on page 32). If the problem still persists, restore your unit to normal operation (see *Restoring Your Unit to Normal Operation* on page 85).
My unit is not responding.	The system has encountered a problem.	Press the on/off button for at least ten seconds to force a hardware reset on the unit.

Problem	Possible Cause	Solution
The battery is not recharging.	Ambient temperature is too high or too low.	In this case, the unit's LED is blue and blinks slowly. Make sure that the temperature in the location where you recharge the battery is within the specifications.
	The USB power adapter is not connected properly.	Make sure that the USB power adapter is connected to the unit and the AC outlet. In this case, the unit's LED is not blinking at all, but there is a battery icon with a flash symbol displayed on screen. If the USB power adapter is connected properly and the problem persists, it could mean that the USB power adapter is defective. In this case, try replacing the adapter. You can purchase new USB power adapters from EXFO.
I have just replaced the battery and the unit's LED turns to red when I turn on the unit.	The unit may take a little time to detect the level of a new battery.	Connect the unit to a power outlet with the provided USB power adapter and let the battery charge for a few minutes. After a short while, the unit should turn on. However, it could take a few charge/discharge cycles before the unit's LED indicator and the on-screen battery status icon reflect the actual power level of the new battery.

Problem	Possible Cause	Solution
On my unit, no wireless network is listed.	No network has been configured yet.	You must first configure the desired networks on your smart device, using the FIP-500 tool in the EXFO Basecamp application (see *Working With a Wireless Network* on page 50).
My unit does not connect automatically to the wireless network that I have used during my last work session.	There is a connection problem with the network.	➤ Ensure that the Wi-Fi connection is enabled on your unit (see *Enabling or Disabling the Wireless Communication* on page 49). ➤ In the case of a secured network, ensure that the password has not changed since the initial configuration of this network. If the password is no longer valid, you will have to update it using the EXFO Basecamp application (see *Working With a Wireless Network* on page 50). ➤ Ensure that the network is working normally.

Problem	Possible Cause	Solution
My unit does not connect to the wireless network that I choose from the list of configured networks.	There is a connection problem with the network.	➤ Ensure that the Wi-Fi connection is enabled on your unit (see *Enabling or Disabling the Wireless Communication* on page 49). ➤ In the case of a secured network, ensure that the right password has been entered and that it has not changed since the initial configuration of this network. You will have to re-enter the password or update it using the FIP-500 tool in the EXFO Basecamp application (see *Working With a Wireless Network* on page 50). ➤ Ensure that the network is working normally.
My unit cannot connect to a Wi-Fi network even though I have configured all parameters correctly.	Since every network has its own specifications, there may be elements that are not compatible with your unit.	Configure a Wi-Fi hotspot on a smart device or a laptop that you will use to give your unit access a wireless network. When it is done, add this Wi-Fi hotspot to the list of configured networks as you would with any Wi-Fi networks (see *Configuring a Wireless Network* on page 53).

Problem	Possible Cause	Solution
I cannot use the EXFO Basecamp application anymore.	The SSL certificate is no longer valid.	➤ You need to update the EXFO Basecamp application on the smart device and establish a Bluetooth® connection with the FIP-500. ➤ If this does not work, contact EXFO.

Restoring Your Unit to Normal Operation

If you ever encounter major problems with your unit (for example, the unit does not behave the way it used to), you can revert it to its initial state (as it was at time of purchase).

CAUTION

- **Once the recovery operation is started, it cannot be cancelled. Make sure to transfer any data that you wish to keep prior to starting the recovery operation, as they will be permanently lost. Data transfer is only possible for units used in conjunction with the EXFO Basecamp application through the synchronisation process. See *Synchronizing Job Results With the Smart Device and the Cloud Server* on page 60.**
- **Follow the procedure below carefully and connect your unit to a power outlet using the provided USB power adapter when you are instructed to do so.**

CAUTION

Electrostatic discharge (ESD) damage can cause complete or intermittent equipment failures.

- **Always use an ESD-preventive wrist or ankle strap when opening your unit. Ensure that the antistatic strap makes good skin contact and that the end of its wire is grounded properly.**
- **Never touch any component inside the unit other than those identified in the procedure hereafter, either with tools or your fingers.**

To restore you unit to normal operation:

1. If desired, transfer the data that you wish to keep (see *Generating Measurement Reports* on page 47 and *Synchronizing Job Results With the Smart Device and the Cloud Server* on page 60).

Note: *You cannot transfer data when the FIP-500 is used as a standalone unit (without a smart device).*

2. Ensure that the battery level of your unit will be sufficient to start the unit when instructed to do so (no red battery icon on screen or red, steady LED on the unit's front panel).
3. Turn off your unit (shutdown).

4. If applicable, disconnect the USB cable. This is necessary to be able to open the unit as explained hereafter.
5.
6.

CAUTION

To avoid damaging your unit, do not use metallic objects such as the ball of a pen to push the reset button. Always use your finger or a non-metallic object.

7.
8.

CAUTION

DO NOT TURN OFF your unit while the recovery operation is underway. Doing so may damage your unit. Damaged units will need to be sent back to EXFO for repair.

9.
10.
11. Connect your unit to a power outlet using the provided USB power adapter. This will ensure that your unit remains powered on during the whole recovery operation.
12.
13.
14. Once your unit has restarted, set the operation language, read and accept the EXFO license agreement, and configure the date and time, as you did when you first received your unit (see *Configuring Your Unit at First Startup* on page 19).

Accessing the Online Documentation From the FIP-500

For more detailed information, you can also access the user guide at all times from your smart device:

- by scanning the QR code displayed on your unit
- by using the corresponding link in the EXFO Basecamp application (see *Accessing the Online Documentation From the Smart Device* on page 57)

Note: *The user guide is available from the My EXFO section of the EXFO Web site (www.exfo.com) for download in PDF format.*

Note: *You can exit the Getting started guide at any time by using the X.*

To access the user guide with the QR code:

1.

2.

Contacting the Technical Support Group

To obtain after-sales service or technical support for this product, contact EXFO at one of the following numbers. The Technical Support Group is available to take your calls from Monday to Friday, 8:00 a.m. to 7:00 p.m. (Eastern Time in North America).All inquiries regarding service, calibration and technical assistance should be directed to the Customer Service department:

Technical Support Group
400 Godin Avenue
Quebec (Quebec) G1M 2K2
CANADA

1 866 683-0155 (USA and Canada)
Tel.: 1 418 683-5498
Fax: 1 418 683-9224
support@exfo.com

For detailed information about technical support, and for a list of other worldwide locations, visit the EXFO Web site at www.exfo.comIf you have comments or suggestions about this user documentation, you can send them to customer.feedback.manual@exfo.com.

To accelerate the process, please have information such as the name and the serial number (see the product identification label), as well as a description of your problem, close at hand.

Sharing Information With the Technical Support Group

After contacting EXFO for support, you may need to share some of the measurements or error reports with the technical support group for further investigation.

Note: *You must contact the technical support group before sharing measurements or error reports. Otherwise, no measurements or error reports will be processed or archived.*

Note: *You must contact the technical support group if you want to share job measurements.*

Your unit will need access to a Wi-Fi connection to be able to share results. If you have not configured any Wi-Fi network yet, see *Working With a Wireless Network* on page 50.

Note: *To be able to send measurements and error reports to the technical support group, you must read and accept the privacy and security policies.*

To share information with the technical support group:

1.

2.

A confirmation message is displayed as soon as the transfer is complete.

Viewing System Information

You can easily access important information such as the model of your unit, the serial number, the software and hardware versions, as well as the latest hardware calibration, directly from your unit. You can also find the contact information if you ever need to reach EXFO.

To view the system information:

1. From the main menu, tap **Settings**.

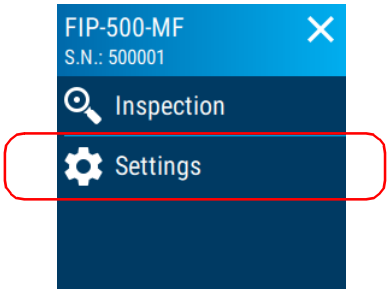

2. Scroll down to the **Unit settings** section.
3. Tap **About**.

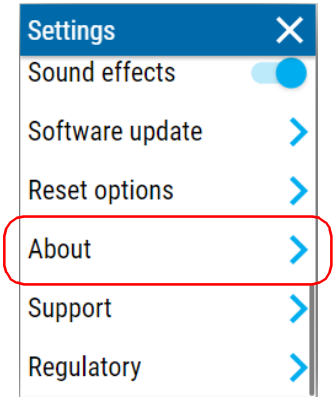

The information you want to view is displayed on screen.

To retrieve the contact information:

1. From the main menu, tap **Settings**.

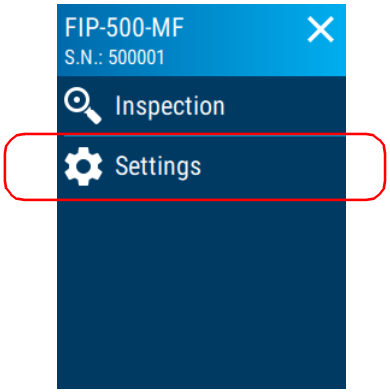

2. Scroll down to the **Unit settings** section.
3. Tap **Support**.

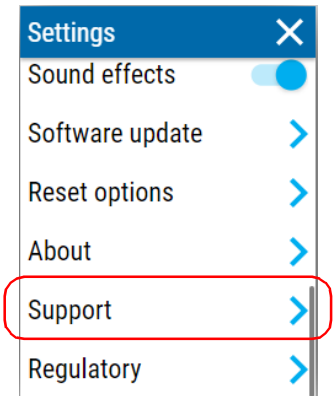

The information you want to view is displayed on screen.

Transportation

Maintain a temperature range within specifications when transporting the unit. Transportation damage can occur from improper handling. The following steps are recommended to minimize the possibility of damage:

- Pack the unit in its original packing material when shipping.
- Avoid high humidity or large temperature fluctuations.
- Keep the unit out of direct sunlight.
- Avoid unnecessary shocks and vibrations.

9 Warranty

General Information

EXFO Inc. (EXFO) warrants this equipment against defects in material and workmanship for a period of one year from the date of original shipment. EXFO also warrants that this equipment will meet applicable specifications under normal use.During the warranty period, EXFO will, at its discretion, repair, replace, or issue credit for any defective product, as well as verify and adjust the product free of charge should the equipment need to be repaired or if the original calibration is erroneous. If the equipment is sent back for verification of calibration during the warranty period and found to meet all published specifications, EXFO will charge standard calibration fees.

IMPORTANT

The warranty can become null and void if:

- **unit has been tampered with, repaired, or worked upon by unauthorized individuals or non-EXFO personnel.**
- **warranty sticker has been removed.**
- **case screws, other than those specified in this guide, have been removed.**
- **case has been opened, other than as explained in this guide.**
- **unit serial number has been altered, erased, or removed.**
- **unit has been misused, neglected, or damaged by accident.**

THIS WARRANTY IS IN LIEU OF ALL OTHER WARRANTIES EXPRESSED, IMPLIED, OR STATUTORY, INCLUDING, BUT NOT LIMITED TO, THE IMPLIED WARRANTIES OF MERCHANTABILITY AND FITNESS FOR A PARTICULAR PURPOSE. IN NO EVENT SHALL EXFO BE LIABLE FOR SPECIAL, INCIDENTAL, OR CONSEQUENTIAL DAMAGES.

Liability

EXFO shall not be liable for damages resulting from the use of the product, nor shall be responsible for any failure in the performance of other items to which the product is connected or the operation of any system of which the product may be a part.

EXFO shall not be liable for damages resulting from improper usage or unauthorized modification of the product, its accompanying accessories and software.

Exclusions

EXFO reserves the right to make changes in the design or construction of any of its products at any time without incurring obligation to make any changes whatsoever on units purchased. Accessories, including but not limited to fuses, pilot lamps, batteries and universal interfaces (EUI) used with EXFO products are not covered by this warranty.

This warranty excludes failure resulting from: improper use or installation, normal wear and tear, accident, abuse, neglect, fire, water, lightning or other acts of nature, causes external to the product or other factors beyond the control of EXFO.

IMPORTANT

In the case of products equipped with optical connectors, EXFO will charge a fee for replacing connectors that were damaged due to misuse or bad cleaning.

Certification

EXFO certifies that this equipment met its published specifications at the time of shipment from the factory.

Service and Repairs

EXFO commits to providing product service and repair for five years following the date of purchase.

To send any equipment for service or repair:

1. Call one of EXFO's authorized service centers (see *EXFO Service Centers Worldwide* on page 98). Support personnel will determine if the equipment requires service, repair, or calibration.
2. If equipment must be returned to EXFO or an authorized service center, support personnel will issue a Return Merchandise Authorization (RMA) number and provide an address for return.
3. If possible, back up your data before sending the unit for repair.
4. Pack the equipment in its original shipping material. Be sure to include a statement or report fully detailing the defect and the conditions under which it was observed.
5. Return the equipment, prepaid, to the address given to you by support personnel. Be sure to write the RMA number on the shipping slip. *EXFO will refuse and return any package that does not bear an RMA number.*

Note: *A test setup fee will apply to any returned unit that, after test, is found to meet the applicable specifications.*

After repair, the equipment will be returned with a repair report. If the equipment is not under warranty, you will be invoiced for the cost appearing on this report. EXFO will pay return-to-customer shipping costs for equipment under warranty. Shipping insurance is at your expense.

Routine recalibration is not included in any of the warranty plans. Since calibrations/verifications are not covered by the basic or extended warranties, you may elect to purchase FlexCare Calibration/Verification Packages for a definite period of time. Contact an authorized service center (see *EXFO Service Centers Worldwide* on page 98).

EXFO Service Centers Worldwide

If your product requires servicing, contact your nearest authorized service center.

EXFO Headquarters Service Center
400 Godin Avenue
Quebec (Quebec) G1M 2K2
CANADA

1 866 683-0155 (USA and Canada)
Tel.: 1 418 683-5498
Fax: 1 418 683-9224
support@exfo.com

EXFO Europe Service Center
Winchester House, School Lane
Chandlers Ford, Hampshire S053 4DG
ENGLAND

Tel.: +44 2380 246800
Fax: +44 2380 246801
support.europe@exfo.com

EXFO Telecom Equipment (Shenzhen) Ltd.
3rd Floor, Building C,
FuNing Hi-Tech Industrial Park, No. 71-3,
Xintian Avenue,
Fuhai, Bao'An District,
Shenzhen, China, 518103

Tel: +86 (755) 2955 3100
Fax: +86 (755) 2955 3101
support.asia@exfo.com

To view EXFO's network of partner-operated Certified Service Centers nearest you, please consult EXFO's corporate website for the complete list of service partners:
http://www.exfo.com/support/services/instrument-services/exfo-service-centers.

Index

A

AC requirements 15, 16
accessing online help
  from the smart device..... 57
  from the unit 88
adapter 14
adjusting
  brightness..... 27
  date and time 28
after-sales service 89
applications, installing 79
automatic
  connection to network 54
available models..... 8

B

backlight, setting 27
battery
  level 69, 78, 82
  maintenance recommendations 67, 69
  purchasing new 68
  recharging 3, 7, 69, 71
  replacing or removing 72, 73
  resetting information..... 32
  status icons..... 6, 69, 78, 82
  status LED..... 2, 4, 17, 69, 78, 82
  type allowed 72
blinking LED 4
blue LED 4
Bluetooth®
  closing connection..... 47
  data transfer 47
  establishing connection 47, 48
  frequency band data ..... viii, ix, xi
  signal strength..... 48
  status..... 47, 48
boot, first 19
brightness
  adjusting..... 27
  icon..... 28
button, on/off..... 2, 4, 17, 70, 73

C

capacitors 14
caution
  of personal hazard 9
  of product hazard 9
changing
  battery 72, 73
  date and time 28
charge
  icon..... 69, 78
  status of the battery 69, 78, 82
charger 14
charging battery..... 3
cleaning
  fiber ends..... 23
  front panel 63
  touchscreen 66
closing a connection..... 47
colors, LEDs 4
configured networks 50, 53
configuring
  automatic connection 54
  brightness 27
  date and time 28
  delay before sleep 30
  unit 19
  Wi-Fi communication 49
  wireless network 50
connecting
  to wireless network..... 50, 54
  via Bluetooth®..... 47, 48
conventions, safety..... 9
current, electrical..... 16
customer service 97

D

data transfer 47
date and time, adjusting 28
deactivating Wi-Fi 49
decimal separator..... 1
default values..... 32, 85
disconnecting from Bluetooth®..... 47
documentation 57, 88

E

enabling
  Wi-Fi 49
equipment returns 97
establishing a connection
  via Bluetooth® 47, 48
  with a wireless network..... 54
EXFO Basecamp application, installation..... 46
external power supply..... 14

F

factory settings 32, 85
favorite networks 50, 53
fiber ends, cleaning..... 23
Fiber Xplorer 20
first
  startup..... 19
forget networks 55
frequency, Bluetooth® and Wi-Fi..... viii, ix, xi
front panel, cleaning..... 63

H

help, online 57, 88
high temperature 25
hour, setting 28

I

icon
  battery status 6, 69, 78, 82
  Bluetooth® status 47, 48
  brightness..... 28
  Wi-Fi status 52
identification label..... 89
indoor use 14
input current 16
inserting battery 72, 73
installing
  EXFO Basecamp application..... 46
  software..... 79
internal
  temperature..... 7, 25
IPv4 wireless routers characteristics..... 51

L

label, identification..... 89
LED
  battery status..... 2, 17, 69, 78, 82
  indicators..... 4
Li-ion/Li-Po battery 7, 69, 72
list
  of configured networks 50, 53
  of networks, removing item from 55

M

main features 1
maintenance
  battery 67, 69
  front panel..... 63
  general information 63
  screen 66
manuals..... 57, 88
maximum
  input current..... 16
models
  available..... 8

N

network
  failure 54
  password 53

settings 53

O

obtaining batteries 68
off LED 4
on/off button 2, 4, 17, 70, 73
online help 57, 88
options, Bluetooth® 47

P

port
USB 3
power
adapter 7, 71
bank 7, 71
button 2, 4, 17, 70, 73
management 30
see also battery
see also USB power adapter
sources 16
supply 14
preferred networks 50, 53
preventing automatic Wi-Fi connection 55
product
identification label 89
purchasing new batteries 68

R

receiving data via Bluetooth® 47
recharging the battery 7, 69, 71
recovery operation 85
red LED 4, 82
regional and language settings 19
regulatory information v
removing
battery 72, 73
configured networks 55
repairing unit 14
replacement batteries 68
replacing
battery 32, 72, 73
return merchandise authorization (RMA) 97
reverting unit to initial state 85

S

safety
caution 9
conventions 9
warning 9
saved networks 50, 53
secured network
configuring 53
icon 53
sending data via Bluetooth® 47
separator, decimal value 1
service and repairs 97
service centers 98
setting
automatic connection 54
brightness 27
date and time 28
reset 32, 85
sleep mode 30
software update 79
Wi-Fi communication 49
wireless network 50
shipping to EXFO 97
shutting down 18
signal
strength, Bluetooth® 48
strength, Wi-Fi 52, 53
sleep mode 18, 30
software, installing and upgrading 79
status
Bluetooth® 47, 48
Wi-Fi 52
stopping
Wi-Fi communication 49
storage requirements 63
strength of the signal 52, 53
symbols, safety 9

T

technical support 89
temperature for storage..... 63
temperature management 25
title bar 20, 52
touchscreen
    cleaning..... 66
transferring
    data via Bluetooth® 47
transportation requirements 63, 93
turning on/off
    unit..... 17, 18
    Wi-Fi 49

U

understanding Fiber Xplorer 20
unit
    first configuration..... 19
    repairing..... 14
    restoring..... 85
    unexpected shutdown 25
    ventilation 15
updating applications 79
USB
    port 3
    power adapter..... 7, 71
    power bank 7, 71
user guides..... 57, 88

V

ventilation 15

W

warranty
    certification 96
    exclusions 96
    general 95
    liability..... 96
    null and void..... 95
Wi-Fi
    connecting..... 50
    frequency band data..... viii, ix, xi
    status 52
wireless
    IPv4 routers characteristics..... 51
    network configuration 53
    networks..... 50, 53
    networks removed from list 55
wizard, configuration 19

CHINESE REGULATION ON RESTRICTION OF HAZARDOUS SUBSTANCES (RoHS)
中国关于危害物质限制的规定

NAMES AND CONTENTS OF THE TOXIC OR HAZARDOUS SUBSTANCES OR ELEMENTS CONTAINED IN THIS EXFO PRODUCT
包含在本 EXFO 产品中的有毒有害物质或元素的名称及含量

Part Name 部件名称	Lead 铅 （Pb）	Mercury 汞 （Hg）	Cadmium 镉 （Cd）	Hexavalent Chromium 六价铬 （Cr(VI)）	Polybrominated biphenyls 多溴联苯 （PBB）	Polybrominated diphenyl ethers 多溴二苯醚 （PBDE）
Enclosure 外壳	O	O	O	O	O	O
Electronic and electrical sub-assembly 电子和电气组件	X	O	X	O	X	X
Optical sub-assembly[a] 光学组件 [a]	X	O	O	O	O	O
Mechanical sub-assembly[a] 机械组件 [a]	O	O	O	O	O	O

Note:
注：
This table is prepared in accordance with the provisions of SJ/T 11364.
本表依据 SJ/T 11364 的规定编制。
O: Indicates that said hazardous substance contained in all of the homogeneous materials for this part is below the limit requirement of GB/T 26572.
O：表示该有害物质在该部件所有均质材料中的含量均在 GB/T 26572 标准规定的限量要求以下。
X: indicates that said hazardous substance contained in at least one of the homogeneous materials used for this part is above the limit requirement of GB/T 26572. Due to the limitations in current technologies, parts with the “X” mark cannot eliminate hazardous substances.
X：表示该有害物质至少在该部件的某一均质材料中的含量超出 GB/T 26572 标准规定的限量要求。
标记“X”的部件，皆因全球技术发展水平限制而无法实现有害物质的替代。
a. If applicable.
如果适用。

MARKING REQUIREMENTS
标注要求

Product 产品	Environmental protection use period (years) 环境保护使用期限 （年）	Logo 标志
This EXFO product 本 EXFO 产品	10	
Battery[a] 电池	5	

a. If applicable.
如果适用。

P/N: 1.0.0.1

www.EXFO.com · info@EXFO.com

CORPORATE HEADQUARTERS 400 Godin Avenue Quebec (Quebec) G1M 2K2 CANADA
Tel.: 1 418 683-0211 · Fax: 1 418 683-2170

TOLL-FREE (USA and Canada) 1 800 663-3936

© 2021 EXFO Inc. All rights reserved.
Printed in Canada (2021-01)