FIP-500

Fiber Inspection Scope

PRELIMINARY

www.EXFO.com

Copyright © 2021 EXFO Inc. Tous droits réservés. La reproduction, le stockage dans un système d'extraction ou la transmission de tout ou partie de la présente publication, que ce soit par voie électronique, mécanique ou tout autre moyen, notamment par photocopie, enregistrement ou autre, sans l'autorisation écrite préalable d'EXFO Inc. (EXFO) sont formellement interdits.

Les informations fournies par EXFO sont considérées comme exactes et fiables. Cependant, EXFO ne saurait être tenu pour responsable de l'utilisation de ces informations ou de la violation de brevets ou de tout autre droit de tiers pouvant en découler. Aucune licence, implicite ou autre, n'est concédée selon les termes du brevet EXFO.

Le code d’entité commerciale et gouvernementale (CAGE) d’EXFO sous l’Organisation du traité de l’Atlantique nord (OTAN) est 0L8C3.

Les informations contenues dans cette publication sont sujettes à changer sans préavis.

Marques commerciales

Les marques commerciales d’EXFO ont été identifiées en tant que telles. Cependant, la présence ou l'absence d'une telle identification n'affecte aucunement le statut légal des marques commerciales.

Unités de mesure

Les unités de mesure mentionnées dans la présente publication sont conformes aux normes et aux pratiques du SI.

Version number: 1.0.0.1

Contents

Informations réglementaires v

1 Introducing the FIP-500 Fiber Inspection Scope 1

Main Features 1
LED Indicators Description 4
Battery Status Icon Description 6
Power Sources 7
Available Options 8
Technical Specifications 8
Conventions 9

2 Informations relatives à la sécurité 11

Informations générales relatives à la sécurité 11
Autres symboles de sécurité sur votre appareil 13
Informations sur la sécurité électrique 14

3 Getting Started with Your Unit 19

Turning on Your Unit 19
Turning off Your Unit 20
Configuring Your Unit at First Startup 21
Understanding the Inspection Screen 22
Changing Your Unit's SmartTip 23
Cleaning and Connecting Optical Fibers 25
Temperature Management 27

4 Setting up Your Unit 29

Adjusting Brightness 29
Adjusting the Date and Time 30
Configuring Sleep Mode 32
Reverting to Factory Settings 34

5 Inspecting Fiber Ends 37

Selecting a Connector Type 37
Selecting a Fiber Type 40
Inspecting Multi-Fiber Ends 42
Navigating Through Multi-Fiber Captures 43
Displaying or Hiding the Overlay 45
Enabling or Disabling the Flashlight 46

6 Working with the EXFO Basecamp Application 47
Installing the EXFO Basecamp application on Your Smart Device 48
Establishing or Closing a Connection With a Smart Device Via the Bluetooth Technology 49
Enabling or Disabling the Wireless Communication 51
Working With a Wireless Network 52
Accessing the Online Documentation From the Smart Device 58

7 Maintenance 59
Cleaning Lenses 60
Cleaning the Touchscreen 62
Recommandations d'entretien de la batterie 63
Recharging the Battery 66
Replacing the Battery 69
Upgrading Applications and Firmware 76
Recyclage et mise au rebut 77

8 Troubleshooting 79
Solving Common Problems 79
Restoring Your Unit to Normal Operation 83
Accessing the Online Documentation From the FIP-500 86
Contacting the Technical Support Group 87
Sharing Information With the Technical Support Group 88
Viewing System Information 89
Transportation 91

9 Warranty 93
General Information 93
Liability 94
Exclusions 94
Certification 94
Service and Repairs 95
EXFO Service Centers Worldwide 96

Index 97

Informations réglementaires

Déclaration réglementaire sur les interférences électromagnétiques pour le Canada et les États-Unis

L'équipement de test et de mesure électronique n'est pas tenu de se conformer aux normes FCC partie 15 sous-partie B aux États-Unis et ICES-003 au Canada. Néanmoins, EXFO Inc. met en œuvre des efforts raisonnables pour assurer le respect des normes applicables.

Les limites établies par ces normes sont destinées à offrir une protection raisonnable contre une interférence néfaste lorsque l'équipement est utilisé dans un environnement commercial. Cet équipement génère, utilise et peut émettre de l'énergie radio-fréquence et, s'il n'est pas installé et utilisé conformément à la documentation de l'utilisateur, il peut occasionner une interférence néfaste aux communications radio. L'utilisation de cet équipement dans une zone résidentielle est susceptible d'occasionner une interférence néfaste, auquel cas l'utilisateur sera tenu de corriger l'interférence à ses propres frais.

Si l'utilisateur apporte des modifications sans l'autorisation expresse du fabricant, il peut se voir interdire l'utilisation de l'équipement.

Déclaration réglementaire européenne sur la compatibilité électromagnétique

Avertissement : Ceci est un produit de classe A. Dans un environnement domestique, ce produit est susceptible de provoquer des interférences radio, dans quel cas l'utilisateur peut être amené à prendre les mesures adéquates. Votre produit est certifié pour (ou convient à) une utilisation dans des environnements industriels électromagnétiques.

Informations générales relatives à la conformité des produits sans fil

Votre appareil est livré avec un module interne sans fil (adaptateur) et deux antennes pour lesquels les informations ci-après s'appliquent :

Ce produit ne contient aucun composant sans fil dont l'utilisateur peut assurer le dépannage. Toute modification ou altération non autorisée apportée au produit annulera la garantie et l'ensemble des certifications et approbations réglementaires applicables.

Informations relatives à la conformité des produits sans fil pour le Canada et les États-Unis

Votre appareil est livré avec un module interne sans fil (adaptateur) et deux antennes pour lesquels les informations ci-après s'appliquent :

- Cet appareil est conforme à l'article 15 des règles de la FCC.
- Cet appareil est conforme aux normes RSS sans licence canadiennes en termes d’innovation, de sciences et de développement économique.
- L'utilisation est sujette aux deux conditions suivantes :
  (1) Cet appareil ne cause pas de brouillage préjudiciable

  et

  (2) Cet appareil doit accepter toutes les interférences reçues, y compris celles susceptibles de provoquer un dysfonctionnement.

Utilisation dans des environnements spécifiques :

- L'utilisation de produits sans fil dans des lieux à risques est limitée par les contraintes imposées par les directeurs de la sécurité de ces environnements.
- L'utilisation de produits sans fil dans les avions est régie par la FAA (Federal Aviation Administration).
- L'utilisation de produits sans fil dans les hôpitaux est restreint selon les limites définies par chaque hôpital.
- N'utilisez pas un émetteur portable à proximité de détonateurs non protégés ou dans un environnement à risque explosif.

Déclaration sur l'exposition aux radiations :

- Le produit respecte la limite d'exposition aux fréquences radio portables des États-Unis et du Canada définie pour un environnement non contrôlé et est sans danger dans le cadre des opérations prévues telles que décrites dans ce document utilisateur.
- L'exposition aux fréquences radio peut être encore réduite en éloignant l'appareil le plus possible du corps de l'utilisateur.

Fonction RF et gamme de fréquences :

Votre appareil est conçu pour fonctionner sur les bandes de fréquence Bluetooth® et WLAN de 2,4 GHz.

Les informations sur les bandes de fréquences Bluetooth® et Wi-Fi sont les suivantes :

- Bluetooth® : Canaux 1 à 11 - Entre les fréquences 2412 MHz - 2462 MHz.
  La puissance de sortie est de 11.7 dBm nominal.
- Wi-Fi : Canaux 1 à 11 - Entre les fréquences 2412 MHz - 2462 MHz.
  La puissance de sortie maximale est de 18.5 dBm.

Informations relatives à la conformité des produits sans fil pour la Communauté européenne

Votre appareil est conçu pour fonctionner sur les bandes de fréquence Bluetooth® et WLAN de 2,4 GHz.

Les informations sur les bandes de fréquences Bluetooth® et Wi-Fi sont les suivantes :

- Bluetooth® : Canaux 1 à 13 - Entre les fréquences 2412 MHz - 2472 MHz.
  La puissance de sortie est de 11.7 dBm nominal.
- Wi-Fi : Canaux 1 à 13 - Entre les fréquences 2412 MHz - 2472 MHz.
  La puissance de sortie maximale est de 18.5 dBm.

Cet appareilest un système de transmission à large bande (émetteur-récepteur) de 2,4 GHz, destiné à une utilisation dans tous les États membres de l'UE et tous les pays de l'AELE, sauf France et Italie, où un usage restrictif s'applique.

En Italie, l'utilisateur final doit demander une licence aux autorités nationales chargées de la gestion du spectre afin d'obtenir l'autorisation d'utiliser l'appareil pour la configuration de liaisons radio extérieures et/ou pour fournir un accès à des services de télécommunications et/ou à des services réseau.

Cet appareil ne peut pas être utilisé pour configurer des liaisons radio en France, et dans certaines régions, la puissance de sortie RF peut être limitée à 10 mW EIRP dans la bande de fréquences de 2454 - 2483.5 MHz. Pour des informations détaillées, l'utilisateur final est invité à contacter les autorités nationales chargées de la gestion du spectre en France.

Restrictions locales applicables à l'utilisation de fréquences radio 802.11a, 802.11b, 802.11d, 802.11g, 802.11n et 802.11ac

En raison des fréquences utilisées par 802.11a, 802.11b, 802.11d, 802.11g, 802.11n et 802.11ac, les appareils réseau sans fil peuvent ne pas être harmonisés dans tous les pays. Les produits 802.11a, 802.11b, 802.11d, 802.11g, 802.11n et 802.11ac sont conçus pour une utilisation dans des pays spécifiques seulement et ne doivent pas être utilisés dans des pays autres que ceux adaptés à l'utilisation désignée. En tant qu'utilisateur de ces produits, vous devez obligatoirement vérifier que les produits sont utilisés uniquement dans les pays pour lesquels ils ont été conçus et qu'ils sont configurés avec la sélection correcte de fréquences et de canaux pour le pays d'utilisation.

Déclaration UE de conformité

Par la présente, EXFO déclare que le type d'équipement radio avec « transmission de données à large bande » est en conformité avec la Directive européenne 2014/53/EU.

Le texte complet de la déclaration européenne de conformité est disponible à l’adresse Internet suivante : *www.exfo.com/en/resources/legal-documentation*.

Marquage de conformité technique à la loi japonaise sur la radio

Cet appareil comporte un équipement radio spécifié qui a été certifié conforme à la certification de conformité de règlement technique pour le Japon, conformément à la loi sur la radio.

R 201-135370

Informations relatives à la conformité des produits sans fil pour le Japon

Votre appareil est conçu pour fonctionner sur les bandes de fréquence Bluetooth® et WLAN de 2,4 GHz.

Les informations sur les bandes de fréquences Bluetooth® et Wi-Fi sont les suivantes :

- Bluetooth® : Canaux 1 à 13 - Entre les fréquences 2412 MHz - 2472 MHz.
  La puissance de sortie est de 11.7 dBm nominal.
- Wi-Fi : Canaux 1 à 13 - Entre les fréquences 2412 MHz - 2472 MHz.
  La puissance de sortie maximale est de 18.5 dBm.

Note: *L'information telle que les numéros FCC et IC est disponible directement sur votre appareil. À partir du menu principal, appuyez sur* ***Settings (Paramètres)*** *et puis sur* ***Regulatory (Infos réglementaires)****.*
L'information est affichée dans l'écran ***Regulatory (Infos réglementaires)****.*

1 Introducing the FIP-500 Fiber Inspection Scope

The FIP-500 Fiber Inspection Scope is a portable video microscope used to inspect fiber ends. Its built-in 2.4-inch LCD capacitive touchscreen and quick-change SmartTips facilitate the examination of patchcord connectors and also hard-to-reach connectors on the back of patch panels and bulkhead adapters.

Note: *Depending on the type of smart device you are using, the appearance of the* EXFO Basecamp *application may vary slightly from the illustrations presented in this documentation. Unless otherwise specified, the information applies both to the Android- and iOS-based smart devices.*

Note: *Both on your unit and in the* EXFO Basecamp *application, the period is used as the decimal separator in numerical values, when applicable.*

Main Features

- Ergonomic design
- 2.4-inch LCD capacitive touchscreen directly on unit allowing standalone measurements
- Fast auto focus, auto centering, auto acquisition and auto analysis
- Quick change of SmartTips
- Designed to support multi-fiber connectors with a multi-fiber model
- Visual feedback
- Wi-Fi and Bluetooth® connectivity
- Easy software updates

CAUTION

The optical head of your unit contains precision components. To ensure optimum protection when you do not use the unit or during transportation, cover the optical head with the provided protective cap.

Left side view

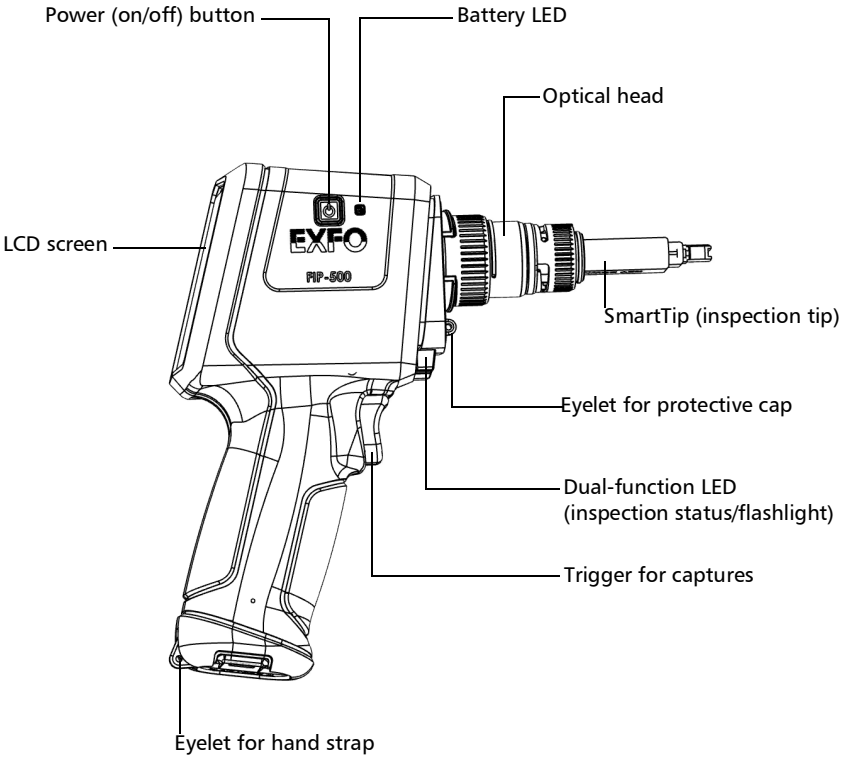

Back view

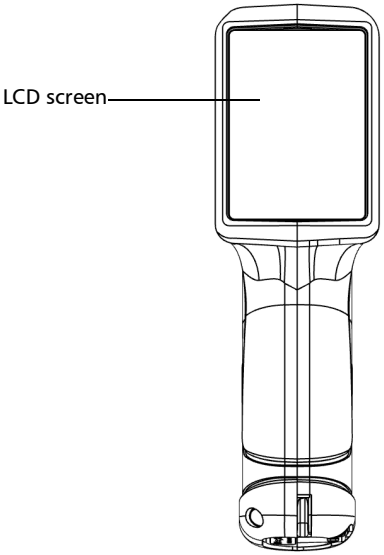

Bottom view

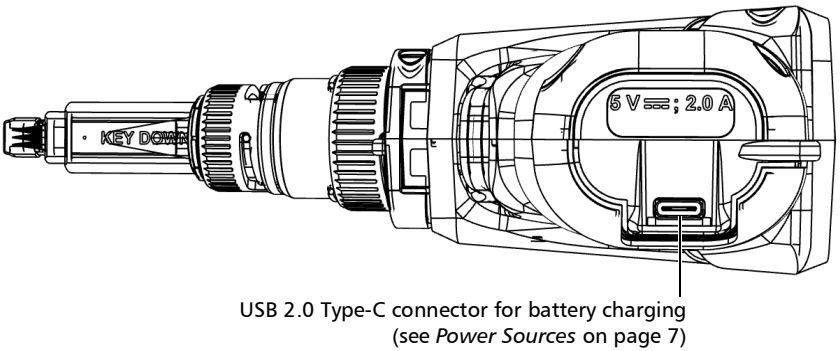

LED Indicators Description

Your unit is equipped with a battery LED and a dual-function LED.

Battery LED

The battery LED, located next to the power button, on the side of your unit, provides you with information about the battery status.

The table below indicates the possible statuses.

Unit	Status	Meaning
Connected to an external power source	Off	The external power source does not provide sufficient power to charge the battery.
	Blue	The battery is fully charged.
	Blue, blinking – slow blinking	The battery is charging.
	Blue, blinking – fast blinking	The battery charge has been interrupted, possibly because the unit may not be within the recommended charging temperatures. For more information, see *Caractéristiques nominales de l'équipement* on page 16.
	Red, fast blinking	Charge or temperature error.
	Red, steady for 5 seconds	The battery level is too low to start the unit.
	White	The unit is starting up.
Not connected to an external power source	Off	The unit is not connected to an external power source.
	Red, steady for 5 seconds	The unit is off and the battery level is too low to start the unit.
	White	The unit is starting up.

Dual-Function LED

The dual-function LED is located just above the trigger used for captures, on the front of your unit. It can indicate the status of the inspection or be used as a flashlight to help you see the connectors you have to inspect in darker rooms (see *Enabling or Disabling the Flashlight* on page 46).

The table below indicates the possible statuses.

Status	Meaning
Blue	The unit is ready and operational. The flashlight feature is disabled.
Blue, blinking	The capture process is in progress.
Green, steady for 5 seconds	The analysis found no defects or scratches exceeding the pass criteria.
Red, blinking for 5 seconds	➤ The capture process could not be completed successfully. Follow the instructions on screen. ➤ The auto-focus operation has timed out. ➤ There is a mismatch between the number of fibers found and the selected connector layout.
Red, steady for 5 seconds	The analysis found defects or scratches that do not meet the pass criteria.
White	The unit is ready and operational. The flashlight feature is enabled.

Battery Status Icon Description

The battery status icon is shown in the upper right corner of the title bar. It complements the information provided by the unit's LED.

Icon	Meaning
	The portion of the icon that appears in white in the title bar (in gray here) reflects the current battery level.
	A red icon indicates that the battery level is running low and that you should connect the unit to a power outlet.
	A flash symbol indicates that the unit is connected to an external power source.

Power Sources

The Fiber Inspection Scope operates with the following power sources:

➤ Indoor use only: USB power adapter connected to a power outlet (fastest way to charge the battery).

Note: *The standard USB ports of a computer cannot power your unit or charge its battery while the unit is on. If you connect your unit to such a USB port with the USB cable, the unit will still consume battery power. If the unit is off when you connect it to the USB port of a computer, its battery could charge, but slowly.*

Note: *If you have a vehicle equipped with dedicated USB charging ports, you could connect your unit to one of these ports to charge the battery. The actual results will vary with each vehicle. You could also use a certified USB power bank (portable charger) to charge your unit.*

➤ Indoor and outdoor use: One lithium-ion (Li-ion) or one lithium-polymer (Li-Po) rechargeable battery (battery that automatically takes over if you disconnect the unit from its external power source).

Possible to switch from an external power source to battery power or vice versa without affecting operation.

The battery recharges automatically when the unit is connected to an external power source.

Note: *When the ambient temperature is below 0 °C (32 °F) or when it reaches or exceeds about 40 °C (104°F), the battery can either charge more slowly than usual, or not charge at all, depending on the internal temperature of your unit.*

Note: *You can replace the battery yourself (see* Replacing the Battery *on page 69).*

For more information, see *Informations sur la sécurité électrique* on page 14.

Available Options

The MF option offered for your wireless FIP-500 Fiber Inspection Scope allows you to inspect multi-fiber connectors.

Technical Specifications

Hereby, EXFO declares that the radio equipment type “Wideband Data Transmission” is in compliance with European Directive 2014/53/EU.

The full text of the EU declaration of conformity is available at the following Internet address: *www.exfo.com/en/resources/legal-documentation*.

Conventions

Avant d'utiliser le produit décrit dans le présent guide, vous devez connaître les conventions suivantes :

AVERTISSEMENT

Indique un danger potentiel susceptible d'entraîner *la mort ou des blessures graves*. Ne poursuivez pas l'opération à moins d'avoir compris les conditions requises et de les respecter.

MISE EN GARDE

Indique un danger potentiel susceptible d'entraîner *des blessures légères ou moyennement graves*. Ne poursuivez pas l'opération à moins d'avoir compris les conditions requises et de les respecter.

MISE EN GARDE

Indique un danger potentiel susceptible d'entraîner *des dommages matériels*. Ne poursuivez pas l'opération à moins d'avoir compris les conditions requises et de les respecter.

IMPORTANT

Fait référence à des informations sur cet appareil qu'il ne faut pas négliger.

2 Informations relatives à la sécurité

Informations générales relatives à la sécurité

AVERTISSEMENT

N'installez pas et ne raccordez pas de fibre si une source de lumière est active. Ne regardez jamais directement dans une fibre active et veillez à toujours protéger vos yeux.

AVERTISSEMENT

L'utilisation de commandes, réglages et procédures, pour faire fonctionner ou entretenir l'appareil, autres que ceux indiqués dans le présent document peut entraîner une exposition dangereuse à des rayonnements ou provoquer une défaillance de la protection inhérente à l'appareil.

AVERTISSEMENT

Si l'équipement est utilisé de manière non conforme aux instructions du fabricant, la protection offerte par cet équipement peut être compromise.

AVERTISSEMENT

Veuillez utiliser uniquement des accessoires conçus pour votre appareil et agréés par EXFO. Veuillez vous référer aux caractéristiques techniques ou contacter EXFO pour obtenir une liste complète des accessoires disponibles pour votre appareil.

IMPORTANT

Reportez-vous à la documentation fournie par les fabricants des accessoires utilisés avec votre produit EXFO. Elle peut contenir des conditions environnementales et/ou d'exploitation qui restreignent leur utilisation.

IMPORTANT

Lorsque vous apercevez le symbole suivant sur votre appareil , référez-vous impérativement aux instructions de la documentation utilisateur. Veillez à comprendre et à respecter les conditions requises avant d'utiliser votre produit.

IMPORTANT

Lorsque vous apercevez le symbole suivant sur votre appareil , cela indique que votre appareil est équipé d'une source laser, ou qu'il peut être utilisé avec des instruments équipés d'une source laser. Ces instruments incluent, sans s'y limiter, les modules et les appareils optiques externes.

IMPORTANT

Vous trouverez d'autres consignes de sécurité concernant votre appareil tout au long de cette documentation, en fonction de l'opération à effectuer. Veillez à lire attentivement les consignes de sécurité qui s'appliquent à votre situation.

CAUTION

Do not use the fiber inspection scope outdoors in wet locations.

Autres symboles de sécurité sur votre appareil

Un ou plusieurs des symboles suivants peuvent également apparaître sur votre appareil.

Symbole	Signification
	Courant continu
	Courant alternatif
	L'appareil est équipé d'une borne de terre (masse).
	L'appareil est équipé d'une borne de conducteur de protection.
	L'appareil est équipé d'une borne de châssis ou de cadre.
	Sous tension (alimentation)
	Hors tension (alimentation)
OU	Sous tension/Hors tension (alimentation)
	Fusible

Informations sur la sécurité électrique

AVERTISSEMENT

Pour vous assurer que l'appareil est totalement hors tension, débranchez le cordon d'alimentation et retirez les piles. Pour plus d'informations sur le retrait de la batterie, consultez la section sur le remplacement de la batterie dans cette documentation utilisateur.

AVERTISSEMENT

- **Utilisez l'alimentation électrique externe (adaptateur secteur USB) en intérieur uniquement.**
- **Ne connectez jamais l'appareil sur les alimentations secteur CA (avec l'adaptateur USB) lorsqu'il est utilisé en extérieur.**
- **Ne connectez jamais l'appareil à un ordinateur avec le câble USB lorsque vous l'utilisez à l'extérieur.**
- **Afin d'éviter tout choc électrique, ne faites pas fonctionner l'appareil si toute partie de la surface extérieure (couvercles, panneaux, etc.) est endommagée.**
- **Seul le personnel agréé doit procéder à des réglages, effectuer la maintenance ou faire des réparations sur des appareils ouverts sous tension. Une personne formée aux premiers secours doit également être présente. Ne remplacez aucun composant lorsque le câble USB et la batterie sont connectés.**
- **Sauf indications contraires, toutes les interfaces sont prévues pour être connectées uniquement à des circuits ES1.**
- **Utilisez uniquement l'adaptateur USB listé et certifié fourni par EXFO avec votre appareil. Il assure une isolation renforcée entre le primaire et le secondaire, et est adapté au pays dans lequel l'appareil est vendu.**
- **Les condensateurs de l'appareil peuvent être chargés même si celui-ci n'est plus alimenté en courant.**

MISE EN GARDE

- **Placez l'appareil de manière à ce que l'air puisse circuler librement autour.**
- **Lorsque vous utilisez l'appareil à l'extérieur, assurez-vous qu'il est à l'abri des liquides, de la poussière, des rayons du soleil, des précipitations et du vent.**

MISE EN GARDE

L'utilisation de tensions plus élevées que celles indiquées sur l'étiquette de votre appareil peut endommager ce dernier.

Caractéristiques nominales de l'équipement	
Température	
➤ Fonctionnement	➤ appareil alimenté par batterie : –10 °C to 40 °C (14 °F to 104 °F) ➤ appareil connecté à une alimentation CA (avec adaptateur USB) : 0 °C to 40 °C (32 °F to 104 °F)[a]
➤ Stockage	➤ appareil – stockage de courte durée[b] : –40 °C to 70 °C (–40 °F to 158 °F) ➤ appareil – stockage de longue durée[c] : 10 °C to 35 °C (50 °F to 95 °F)
Humidité relative[d]	➤ appareil : ≤ 93 % sans condensation ➤ adaptateur d'alimentation USB : 10 % to 90 % sans condensation
Altitude maximale de fonctionnement	➤ 3000 m (9843 pi) (appareil connecté à une source d'alimentation externe) ➤ 4000 m (13123 pi) (appareil fonctionnant sur batterie)

Caractéristiques nominales de l'équipement	
Degré de pollution	➤ 2 (appareil connecté à une source d'alimentation externe) ➤ 3 (appareil fonctionnant sur batterie)[e]
Catégorie de surtension	➤ appareil : I ➤ adaptateur d'alimentation USB : II
Catégorie de mesure	Non noté pour les catégories de mesure II, III, ou IV
Puissance d'entrée[f]	➤ appareil : 5 V ⎓ ; 2 A ➤ adaptateur d'alimentation USB : 100 - 240 V ∼; 50/60 Hz; 1 A max

a. Lorsque la température ambiante est en-dessous de 0 °C (32 °F) ou lorsqu'elle atteint ou dépasse 40 °C (104°F) environ, la batterie peut soit charger plus lentement que d'habitude ou ne pas charger du tout, en fonction de la température interne de votre appareil.
b. Le stockage de courte durée correspond au stockage de l'appareil pendant 48 heures maximum.
c. Le stockage de longue durée correspond au stokcage de plus de trois mois.
d. Mesurée dans une gamme de 0 °C to 31 °C (32 °F to 87.8 °F), qui décroît de façon linéaire jusqu'à 50 % à 40 °C (104 °F).
e. L'équipement doit être raisonnablement protégé de la lumière directe du soleil, des précipitations et de la pression du vent.
f. N'excède pas ± 10 % de la tension nominale.

3 Getting Started with Your Unit

Turning on Your Unit

When you turn on the unit for the very first time, you will be prompted to read and accept the EXFO license agreement and set the date and time (see the section about the first startup for more information).

Note: *The settings you modify at startup can be modified later if necessary.*

To turn on the unit:

Press the on/off button until the unit beeps once. The corresponding LED will light up during the startup process (until the splash screen is displayed).

Left side view

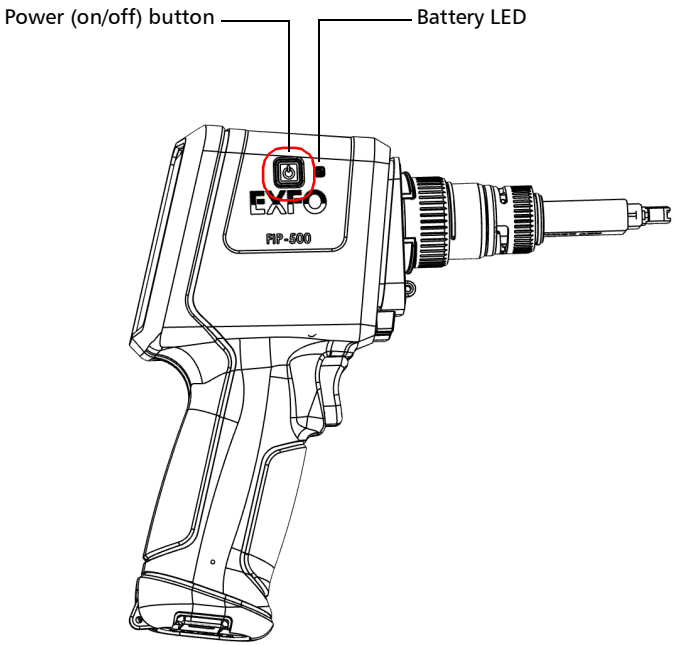

Turning off Your Unit

Unless specified otherwise in this documentation, the settings you configure on your unit are kept in memory even when you turn the unit off.

There are several ways to turn off the unit, including the following:

- *Sleep*: keeps the unit's status information in memory (RAM). The next time you turn your unit on, you will quickly return to your work environment (running applications will still be running). If you intend to leave your unit in sleep mode for more than a few hours, you should perform a shutdown instead to save battery power. After four hours in sleep mode, your unit will go into shutdown mode automatically to save battery power.
- *Shutdown*: completely cuts power to the unit; the unit will perform a complete restart routine the next time you use it. You should perform a shutdown if you do not intend to use your unit for several hours.

  After a shutdown, the unit will start in the **Inspection** screen.

Note: *Should the unit ever stop responding, you can force a hardware reset by pressing and holding down the on/off button for at least 10 seconds. To restart your unit, release the on/off button, and then press it again as you would normally do to start your unit.*

To enter the sleep mode:

Press the on/off button. The unit's backlight will turn off and the touchscreen will be deactivated.

To exit the sleep mode and resume your work:

Press the on/off button or press the trigger.

To turn off the unit completely (shutdown):

Press the on/off button for about three seconds. The unit will beep once and its LED will light up briefly.

Configuring Your Unit at First Startup

The first time you turn on the unit, you are prompted to read and accept the EXFO license agreement and configure the date and time.

Note: *You can change the regional parameters later if necessary.*

Once the configuration is complete, you are presented with a QR code allowing you to download the user documentation to a smart device. You can download the documentation later if you prefer (see *Accessing the Online Documentation From the FIP-500* on page 86).

To configure your unit at first startup:

1. If it is not already done, turn on the unit (see *Turning on Your Unit* on page 19).
2. Read and accept the EXFO license agreement, then tap **Next**.
3. If necessary, configure the date and time by tapping anywhere on the corresponding line. When it is done, tap **Next**.
4. If desired, use the QR code to download the user documentation to your smart device.
5. Tap **Close** when you have finished.
6. If desired, configure a Wi-Fi network allowing you to retrieve the updates, as follows:

   6a. Install the EXFO Basecamp application on your smart device (see *Installing the EXFO Basecamp application on Your Smart Device* on page 48).

   6b. Establish a Bluetooth® connection between the FIP-500 and the smart device (see *Establishing or Closing a Connection With a Smart Device Via the Bluetooth Technology* on page 49).

   6c. Configure a wireless network (see *Working With a Wireless Network* on page 52).

You are now ready to start working with your FIP-500.

Understanding the Inspection Screen

From the inspection screen, you can take captures of connectors under inspection and view these captures. The inspection screen also shows the title bar, which provides information on many elements such as the Bluetooth® connection, Wi-Fi connection and signal strength, as well as battery level.

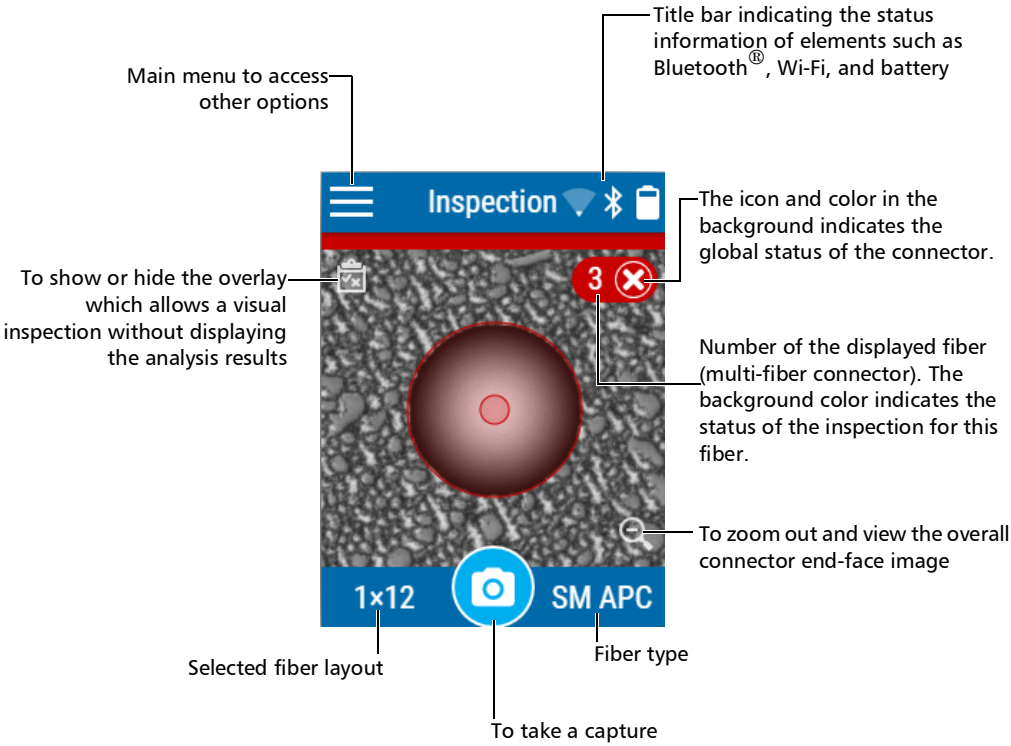

Note: *You can also show or hide the overlay by tapping anywhere in the non-active area (gray background) of the image or directly on the image of the fiber when you view a specific fiber.*

Changing Your Unit's SmartTip

You can change the SmartTip of your unit to better suit your inspection needs.

To change your unit's SmartTip:

1. If necessary, remove the protective cap from the unit.
2. Turn the SmartTip retaining screw counterclockwise (about a quarter turn) until the SmartTip is loose.

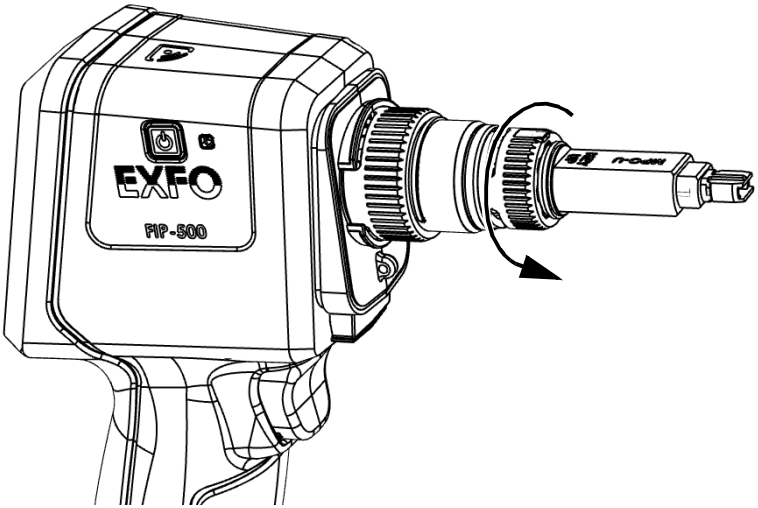

3. Pull on the SmartTip to remove it.

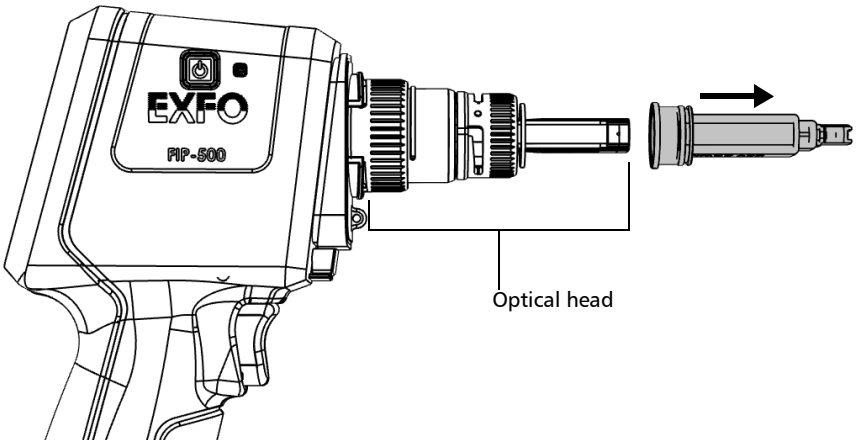

4. Align the new SmartTip with the optical head, and then slide it toward the unit until it stops.

5. Turn the SmartTip retaining screw clockwise (about a quarter turn) to secure the SmartTip in place.

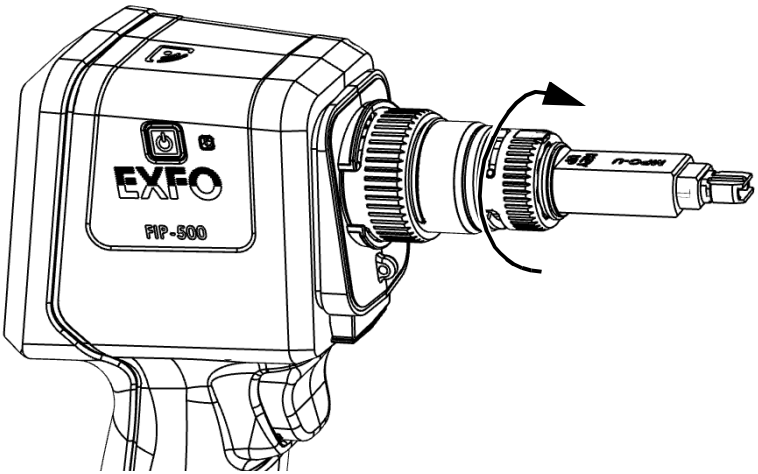

The new SmartTip is now ready to use.

Cleaning and Connecting Optical Fibers

IMPORTANT

To ensure maximum power and to avoid erroneous readings:

- **Always inspect fiber ends and make sure that they are clean as explained below before inserting them into the port. EXFO is not responsible for damage or errors caused by bad fiber cleaning or handling.**
- **Ensure that your patchcord has appropriate connectors. Joining mismatched connectors will damage the ferrules.**

To connect the fiber-optic cable to the port:

1. Inspect the fiber using a fiber inspection scope (or probe). If the fiber is clean, proceed to connecting it to the port. If the fiber is dirty, clean it as explained below.

2. Clean the fiber ends as follows:

2a. Gently wipe the fiber end with a lint-free swab dipped in optical-grade liquid cleaner.

2b. Use a dry swab to dry the connector completely.

2c. Visually inspect the fiber end to ensure its cleanliness.

3. Carefully align the connector and port to prevent the fiber end from touching the outside of the port or rubbing against other surfaces.

   If your connector features a key, ensure that it is fully fitted into the port's corresponding notch.

4. Push the connector in so that the fiber-optic cable is firmly in place, thus ensuring adequate contact.

   If your connector features a screw sleeve, tighten the connector enough to firmly maintain the fiber in place. Do not overtighten, as this will damage the fiber and the port.

Note: *If your fiber-optic cable is not properly aligned and/or connected, you will notice heavy loss and reflection.*

EXFO uses good quality connectors in compliance with EIA-455-21A standards.

To keep connectors clean and in good condition, EXFO strongly recommends inspecting them with a fiber inspection scope (or probe) before connecting them. Failure to do so may result in permanent damage to the connectors and degradation in measurements.

Temperature Management

The internal temperature of your unit will vary with the ambient temperature, but also with the type of tests you perform and their intensity.

In high-temperature conditions, your unit will display warning messages. If the temperature keeps rising and reaches the limit, your unit will turn off as self-protection.

For more information on the effects of temperature on battery charging, see *Power Sources* on page 7.

IMPORTANT

For optimum performance of your unit:

- **Ensure that it remains within the recommended operation and storage temperatures (see *Caractéristiques nominales de l'équipement* on page 16).**
- **Avoid leaving your unit in an overheated vehicle. You may have to let your unit cool down before being able to use it.**
- **Ensure that your unit is normally protected from direct sunlight (during use and storage).**

4 Setting up Your Unit

Adjusting Brightness

You may want to adjust the display brightness yourself to better fit your work environment or preferences.

You may also want to reduce the display brightness to save battery power (the higher the brightness level, the higher the power consumption).

The brightness value is kept in memory even when you turn the unit off.

To adjust the display brightness:

1. From the main menu, tap **Settings**.

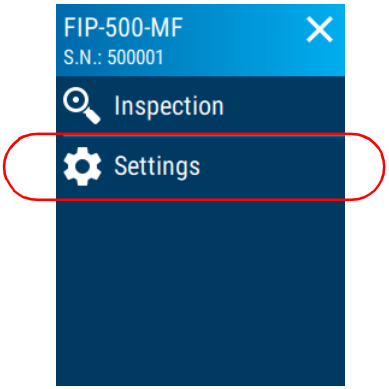

2. Under **Brightness**, tap the dots until the screen appearance is to your liking. You can also tap the desired brightness icon to quickly set the brightness to the minimum or the maximum value.

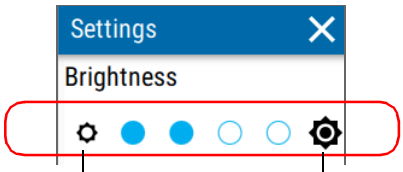

To set the brightness to the minimum value

To set the brightness to the maximum value

The new brightness value is taken into account immediately.

Adjusting the Date and Time

The date and time are expressed in international format. You can adjust them if necessary.

To adjust the date or time manually:

1. From the main menu, tap **Settings**.

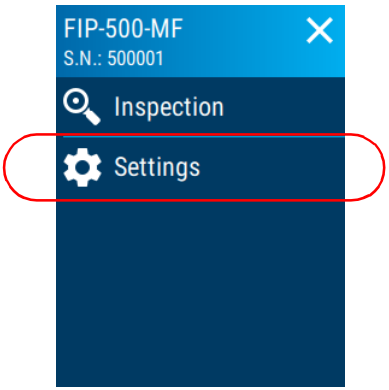

2. Scroll down to the **Unit settings** section.
3. Tap **Date and time**.

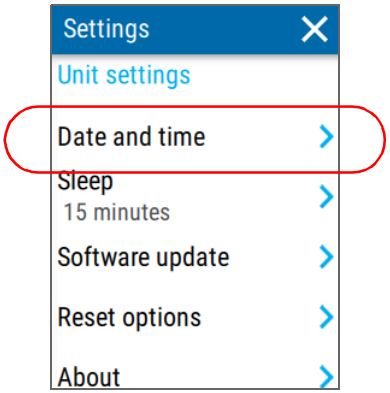

4. Tap the entry corresponding to the element that you want to modify.

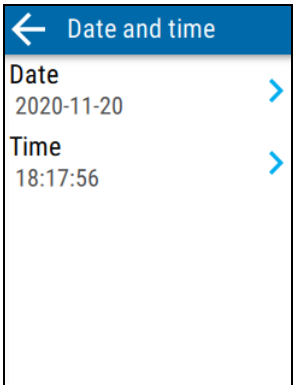

5. Modify the settings according to your needs, and then tap to go back to the **Date and time** screen.

The new values are taken into account immediately.

Configuring Sleep Mode

To help you get the optimum performance out of your unit, it comes with a predefined set of parameters to manage power.

When you do not use your unit for a while, it will go into sleep mode automatically to save power (see *Turning off Your Unit* on page 20).

By default, the duration after which the unit goes into sleep mode is fifteen minutes, but you can select another value.

The value that you set is kept in memory even when you turn the unit off.

IMPORTANT

- **If you intend to leave your unit in sleep mode for more than a day, you should turn it off (shutdown) to save battery power. After 72 hours in sleep mode, your unit will go into shutdown mode automatically to save battery power.**
- **The unit will not enter sleep mode while you perform tests.**

To configure the duration after which the unit enters sleep mode:

1. From the main menu, tap **Settings**.

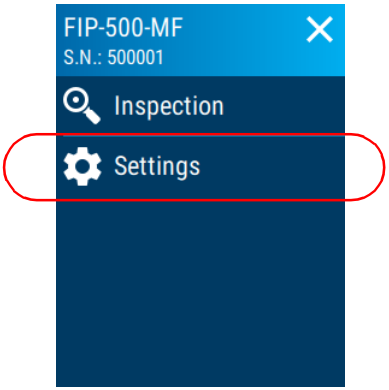

2. Scroll down to the **Unit settings** section.

3. Tap **Sleep**.

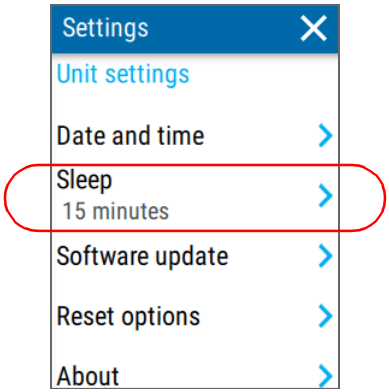

4. Select the desired number of minutes, and then tap to go back to the Date and time screen.

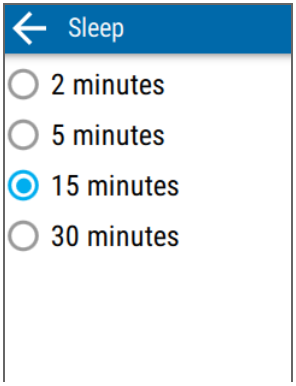

The new value is taken into account immediately.

Reverting to Factory Settings

At any time, you can reset all settings that you have customized, such as the delay before the unit switches to sleep mode, to their default values.

This operation does not affect the current date and time.

To revert values to factory settings:

1. From the main menu, tap **Settings**.

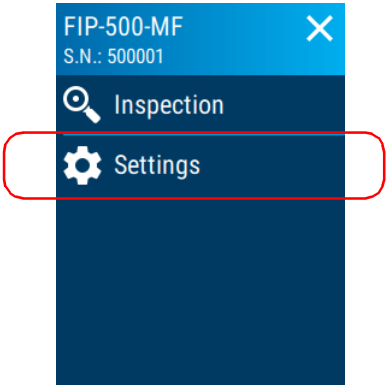

2. Scroll down to the **Unit settings** section.

3. Tap **Reset options**.

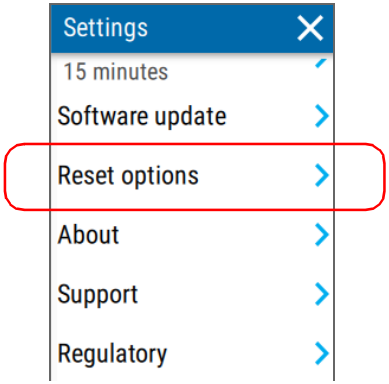

4. Tap **Factory settings**.

5. Tap **RESET** to confirm your choice and start the operation.

5 Inspecting Fiber Ends

You can inspect fiber ends and view the result of this inspection directly on the built-in touchscreen of your unit.

WARNING

Never look directly into a live fiber. It could cause serious eye damage. Always use your FIP-500 Fiber Inspection Scope.

Selecting a Connector Type

Once its initialization is complete, the unit displays the Inspection screen from which you can select the connector type (single- or multi-fiber) for the next capture.

Note: *The single-fiber connector type will be available soon.*

The multi-fiber connector allows you to see multiple fibers at a time. By default, the 1x12 fiber arrangement is selected, but you can select another fiber arrangement that will correspond to the connector you need to inspect. The application displays a graphical representation for each fiber arrangement available. It also displays the used and unused fibers in the connector.

Note: *Only the fibers identified as used will be analyzed.*

To select a connector type:

1. From the **Inspection** view, tap the numbers corresponding to the fiber arrangement.

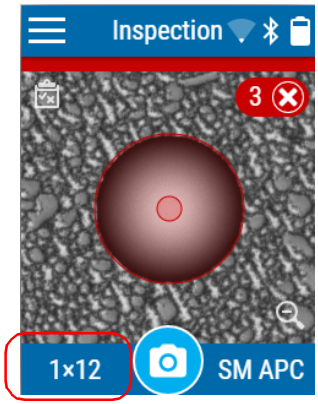

2. In the **Connector type** window, select the type of connector you want to use.

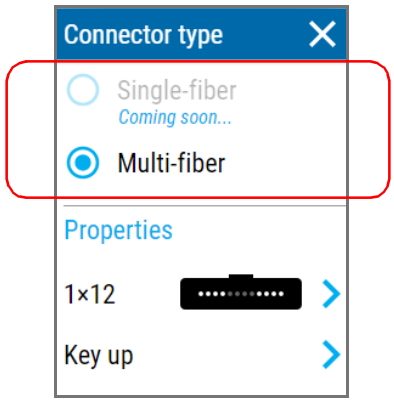

3. If you work with multi-fiber connectors, proceed as follows.

3a. Select the fiber arrangement corresponding to the connector you want to inspect.

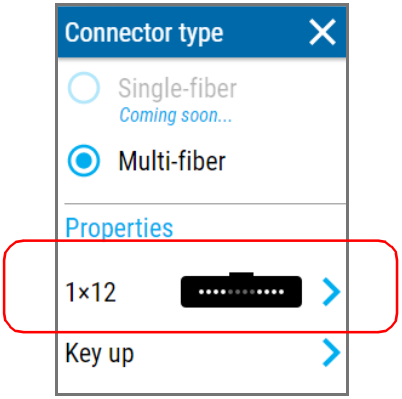

3b. Select the key orientation of the connector.

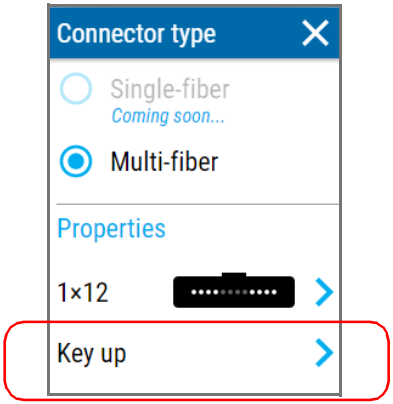

The new settings will be taken into account for the next inspection.

Selecting a Fiber Type

Your unit allows you to inspect singlemode and multimode fiber connectors. To help you identify the type of fiber, the unit lists the typical colors of singlemode and multimode fiber jackets.

The singlemode APC fiber type is selected by default.

Fiber Type	Fiber Core	Comments
Singlemode APC	9 μm	Fiber jacket is yellow.
Multimode OM1	62.5 μm	Modal bandwidth: 200-500 MHz·km. Fiber channel designation: M6. Fiber jacket is orange or slate.
Multimode OM2	50 μm	Modal bandwidth: 500 MHz·km. Fiber channel designation: M5. Fiber jacket is orange.
Multimode OM3	50 μm	Modal bandwidth: 1500-2000 MHz·km. Laser optimized (VCSEL) at 850 nm. Fiber channel designation: M5E. Fiber jacket is aqua.
Multimode OM4	50 μm	Modal bandwidth: 3500-4700 MHz·km. Laser optimized (VCSEL) at 850 nm. Fiber channel designation: M5F. Fiber jacket is aqua or violet.
Multimode OM5	50 μm	Modal bandwidth: 3500-4700 MHz·km. Wideband multimode from 850-953 nm. Fiber jacket is violet or lime green.

To select the fiber type:

1. From the **Inspection** view, tap the fiber type.

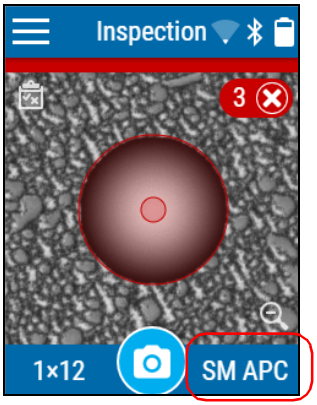

2. In the **Fiber type** window, select the desired type of fiber. If you are not sure whether your setup uses singlemode or multimode fiber, you can have a look at the color chart displayed on the screen.

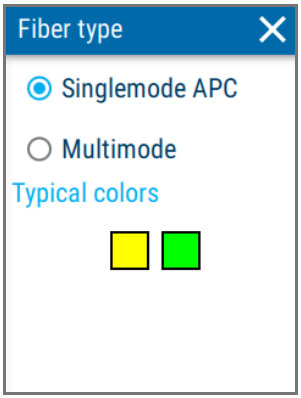

The new settings will be taken into account for the next inspection.

Inspecting Multi-Fiber Ends

The multi-fiber inspection allows you to see multiple fibers at a time.

Before beginning to inspect fiber ends, you must first ensure that the SmartTip installed on your unit corresponds to the type of connector that you need to inspect. You must also select the proper fiber type (singlemode APC or multimode) in the application.

During the capture and analysis process, the application assigns a number to each fiber identified, active or not, according to the selected fiber arrangement.

Note: *If the environment in which you must perform the inspection is dark, you can use the flashlight feature to help you locate the connectors. For more information, see* Enabling or Disabling the Flashlight *on page 46.*

To inspect multiple fiber ends:

1. Ensure that the proper SmartTip is installed on your unit (see *Changing Your Unit's SmartTip* on page 23).
2. Select the desired connector type, including the fiber arrangement and key orientation. For more information, see *Selecting a Connector Type* on page 37.
3. Select the desired fiber type. For more information, see *Selecting a Fiber Type* on page 40.
4. Clean the connector properly.
5. Once you are satisfied with the inspection, tap .

   OR

   Pull the trigger located on the handle of the unit.

The inspection results are displayed on screen. For more information on navigation through captures, see *Navigating Through Multi-Fiber Captures* on page 43. For more information on the overlay, see *Displaying or Hiding the Overlay* on page 45.

Navigating Through Multi-Fiber Captures

When you inspect multi-fiber connectors, once the analysis is complete, the application displays a global view of the connector (where several fibers are visible at a time). It allows you to have an overview of the inspection results as well as a way to localize any debris that could be located outside the perimeter of the fibers themselves.

From this global view, you can access the detailed capture of any of the inspected fibers that are part of the connector, and vice versa.

From the capture of a specific fiber, you can view, in turn, the captures of the other inspected fibers.

To switch from one fiber row to the other (multi-row fiber arrangements):

Swipe up or down on the screen.

To scroll through the inspection results:

Swipe left or right on the screen.

To access the detailed capture of any of the inspected fibers:

From the global view, tap, the image of the fiber (small circle) or the number corresponding to the desired fiber.

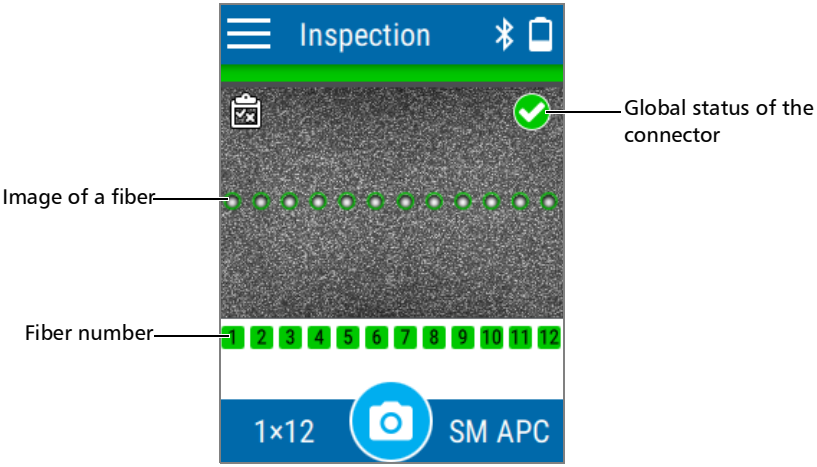

To access the global view:

From the detailed capture view, tap the icon.

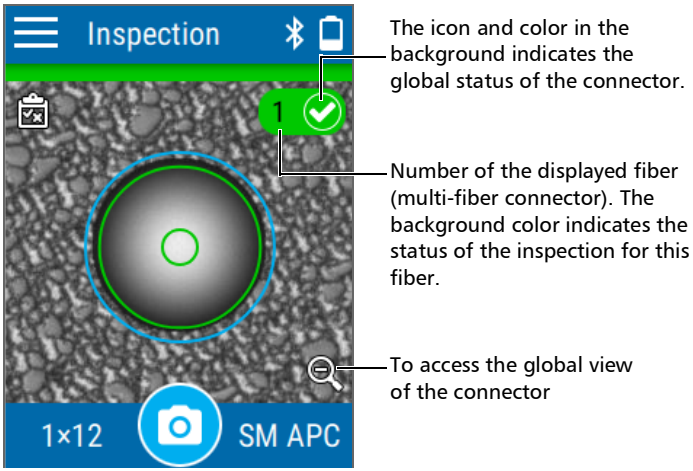

Displaying or Hiding the Overlay

The overlay is shown by default after an analysis. The application displays a circle around each of the active fibers.

The overlay shows the status of the analysis, the status per zone, the analysis zones and any anomaly (defects and scratches) found on the fiber endface. The different regions on a fiber such as the core, the cladding and the adhesive are represented with circles.

The color of the circles shows the status of the analysis zone:

- green: pass
- red: fail
- gray: no analysis could be performed

The overlay applied on a specific fiber in a multi-fiber connector is independent from the overlay of the whole connector. You can show or hide the overlay from the global connector view (where several fibers are visible at a time) or from the view showing a specific fiber.

To display or hide the overlay:

Tap the icon.

OR

Tap either anywhere in the non-active area (gray background) of the image or directly on the image of the fiber when you view a specific fiber.

Enabling or Disabling the Flashlight

Your unit comes equipped with a dual-function LED that can serve as a flashlight to help you locate the connectors. This is particularly useful when the environment in which you must perform the inspection is dark.

To enable or disable the flashlight:

1. From the main menu, tap **Settings**.

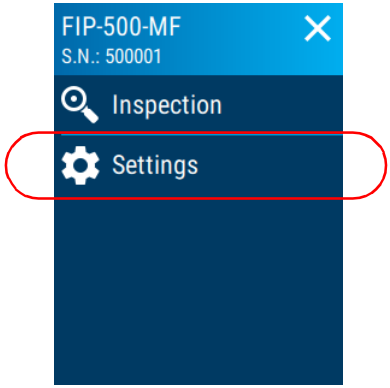

2. With the **Flashlight** toggle, enable or disable the corresponding feature.

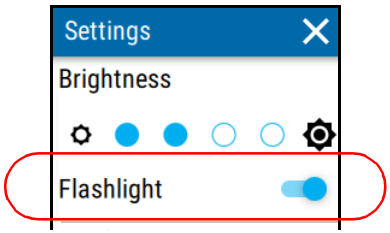

3. Close the **Settings** page to return to the **Inspection** view.

6 Working with the EXFO Basecamp Application

You can use your FIP-500 in association with a smart device equipped with the EXFO Basecamp application allowing you to document your results, archive them on a cloud server, and generate reports.

Note: *In addition to all the other features explained throughout this documentation, you also have access to the features presented hereafter if you work with EXFO Basecamp jobs.*

Note: *The EXFO Basecamp application gives you access to certain features even if you do not log on to your EXFO Basecamp account. However, to benefit from all the available features, you will need to log in. The procedures presented throughout this user documentation will indicate if a logon is required.*

At any time, you can switch from local measurements (that are not part of an EXFO Basecamp job) to measurements within an EXFO Basecamp job. All the measurements are kept in memory.

Note: *Depending on the type of smart device you are using, the appearance of the FIP-500 tool (available from the EXFO Basecamp application) may vary slightly from the illustrations presented in this documentation. Unless otherwise specified, the information applies both to the Android- and iOS-based smart devices.*

Installing the EXFO Basecamp application on Your Smart Device

Before you start working, if you intend to generate reports (single or multiple measurements), work with jobs, or retrieve the firmware and software updates for your unit, you will need to install the EXFO Basecamp application on your smart device.

To install the EXFO Basecamp application:

1. Ensure that you have access to an Internet connection.
2. From your Android-based smart device, open the Google Play Store (usually **Play Store** or **Play** icon).

   OR

   From your iOS-based smart device, open the App Store (usually **App Store** icon).
3. From the Play Store or the App Store, search for *EXFO* or *Basecamp Mobile* to localize the EXFO Basecamp application.
4. Start the installation and follow the on-screen instructions.

Establishing or Closing a Connection With a Smart Device Via the Bluetooth Technology

When you want to work with EXFO Basecamp jobs, perform tasks such as generate reports (single or multiple measurements), or configure Wi-Fi networks to receive updates for your unit, interactions are necessary between the unit and a smart device equipped with the EXFO Basecamp application. These interactions are accomplished using the Bluetooth® technology. By default, the Bluetooth® communication is enabled on your unit, but if you have disabled it, you must enable it before trying to connect to a smart device (see *Enabling or Disabling the Wireless Communication* on page 51).

On your FIP-500 unit, the status of the Bluetooth® communication is indicated with an icon in the title bar. The table below shows the possibilities.

Icon	Meaning
Not visible	The Bluetooth® communication is disabled.
	The Bluetooth® communication is enabled, but no connection has been established yet between the unit and a smart device.
	A connection has been established between the unit and a smart device.

If a connection has been established with a smart device already, but you wish to use your unit with another smart device, you can close the current connection directly from your unit. Similarly, if a connection exists already,

but you wish to connect a smart device to another FIP-500 unit, you can close the connection from the smart device (FIP-500 tool in the EXFO Basecamp application).

To establish a connection via the Bluetooth® technology:

1. If necessary, enable the Bluetooth® communication on your unit (see *Enabling or Disabling the Wireless Communication* on page 51).
2. If it is not already done, install the EXFO Basecamp application on your smart device (see *Installing the EXFO Basecamp application on Your Smart Device* on page 48).
3.
4.

The application establishes the communication automatically. When the connection is successful, the icon appears in the title bar of your FIP-500 unit.

Note: *If the FIP-500 unit that you want to use is already connected to another smart device, you must first close the connection between the FIP-500 unit and the other smart device before being able to connect to this specific FIP-500.*

To close the connection with a smart device from your unit:

1.

2.

To close the connection with an FIP-500 from a smart device:

1.

2.

The smart device is no longer connected to the FIP-500 and you are ready to connect it to another unit.

Enabling or Disabling the Wireless Communication

The interactions between your unit and a smart device are accomplished using the Bluetooth® technology.

The interactions between your unit and the cloud server as well as the EXFO update server (to retrieve firmware and software updates), are accomplished using a connection to a wireless network.

By default, the Bluetooth® communication is enabled on your unit, but the Wi-Fi is not.

You can enable or disable the Bluetooth® communication from your unit only, and the Wi-Fi communication both from your unit and from the smart device (FIP-500 tool in the EXFO Basecamp application).

If you do not need to connect to a wireless network for a certain period of time, you may wish to disable the Wi-Fi communication to save battery power.

To enable or disable the wireless communication from your unit:

1.

2.

The changes are taken into account immediately.

To enable or disable the Wi-Fi communication from the smart device:

1.

2.

The change is taken into account immediately.

Working With a Wireless Network

Note: *You need a smart device equipped with the* EXFO Basecamp *application to configure a wireless network to which your unit will be able to connect later.*

By connecting your unit to a wireless network, you can fully synchronize the results and save them to the cloud server once they have been synchronized with the EXFO Basecamp application.

Also, by connecting your unit to a wireless network, you can check for updates, download these updates and install them directly on your unit (see *Upgrading Applications and Firmware* on page 76).

By default, the Wi-Fi connection is disabled, both on the FIP-500 unit and in the FIP-500 tool of the EXFO Basecamp application. You must enable it before trying to connect to a wireless network (see *Enabling or Disabling the Wireless Communication* on page 51).

Before being able to connect your unit to a Wi-Fi network, you must first configure the desired networks with the EXFO Basecamp application.

Once the configuration and first connection are successful, the configured network is automatically added to the list of possible networks on your unit.

The list of configured networks as well as the last network used are kept in memory even when you turn your unit off. This means that the next time you work with your unit, it will automatically connect to the last network used, unless this network is not available or its password has changed in

the meantime (reconfiguration necessary). Should a network failure occur while the unit is connected to it, the unit will try to reconnect to this network automatically as soon as it becomes available again.

You can remove configured networks from the list to prevent automatic connections to these networks. If you remove the network currently in use, the unit (or the FIP-500 tool in the EXFO Basecamp application) will try to connect to the next configured network on the list that is available.

Your unit supports IPv4 wireless routers having the following characteristics:

- With dynamic IPv4 address assignment
- Not secured, or secured with WPA/WPA2-Personal standards (WPA-PSK/WPA2-PSK versions)
- Broadcasting their network names (SSID) or not (SSID visible or hidden)
- Configured with a 2.4 GHz Wi-Fi band (b/g/n frequencies).

Note: *Your unit does not support the WEP and WPS standards.*

Note: *Your unit does not support public Wi-Fi hotspots requiring authentication from a Web page.*

Note: *Every work environment has its own specifications. If you need information about the configuration of your router, contact your network administrator.*

Note: *To save battery power, you may wish to disable the wireless communication when you do not use it.*

The information about the Wi-Fi connection is indicated with an icon appearing both in the title bar (on your unit) and next to the name of the wireless networks (on your unit and in the EXFO Basecamp application). The table below shows the possibilities.

Icon	Meaning
No Wi-Fi icon visible in the title bar	The Wi-Fi communication is disabled.
Faint Wi-Fi icon visible in the title bar	The Bluetooth® communication is enabled, but the unit is not connected to any wireless network.
	The portion of the icon that appears in white (title bar) or in dark grey (list of wireless networks) reflects the strength of the signal.
	Password-protected (secured) networks are identified by a lock.

Configuring a Wireless Network

Before being able to connect your unit to a Wi-Fi network, you must first configure the desired networks with the EXFO Basecamp application. Once the configuration and first connection are successful, the configured network is automatically added to the list of possible networks on your unit.

The list of configured networks as well as the last network used are kept in memory for future use even when you turn your unit off.

IMPORTANT

You must first establish a Bluetooth® connection between your unit and a smart device before attempting to configure a Wi-Fi network.

To configure a wireless network:

1. Ensure that a Bluetooth®connection has already been established between your unit and a smart device (see *Establishing or Closing a Connection With a Smart Device Via the Bluetooth Technology* on page 49).
2. If necessary, enable the Wi-Fi communication on your unit (see *Enabling or Disabling the Wireless Communication* on page 51).
3.
4.

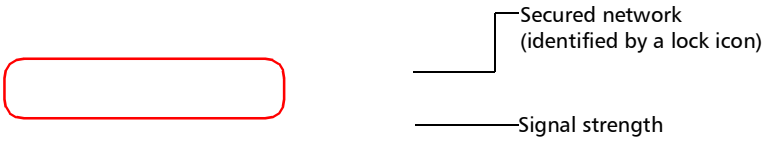

The application establishes the communication automatically.

Note: *Ensure that the EXFO Basecamp application has been able to establish a first connection with the Wi-Fi network before attempting to connect to this network from your FIP-500 unit. This is particularly useful in the case of secured networks to ensure that the provided password is good.*

Connecting to a Wireless Network From Your Unit

When you start a new work session with your unit, it will automatically connect to the last network used, unless this network is not available or its password has changed in the meantime (reconfiguration necessary). Should a network failure occur while the unit is connected to it, the unit will try to reconnect to this network automatically as soon as it becomes available again.

To connect to a wireless network from your unit:

1. Ensure that a connection has already been established between your unit and a smart device via the Bluetooth® technology (see *Working With a Wireless Network* on page 52).
2.
3.

Network to which the unit is currently connected or network used during the last work session

The application establishes the communication automatically.

Note: *If you select a network different than the one used during your last work session and the connection to this new network fails, the application will automatically switch to the last network used to try and establish a connection.*

Removing Configured Networks From the List

You can remove configured networks from the list to prevent automatic connections to these networks (forget network feature). If you remove the network currently in use, the unit (or the EXFO Basecamp application) will try to connect to the next configured network on the list that is available.

On your unit, removed networks are no longer visible unless you reconfigure these networks from the EXFO Basecamp application. In EXFO Basecamp, if these networks are still in range, they will reappear on the list of available networks as if they have never been configured before. This means that for secured networks, their passwords will need to be re-entered if you decide to reconfigure these networks.

To remove a configured network from the list:

1.

2.

Note: *In the FIP-500 tool (in EXFO Basecamp application), the main menu is accessible by opening the three-dot menu.*

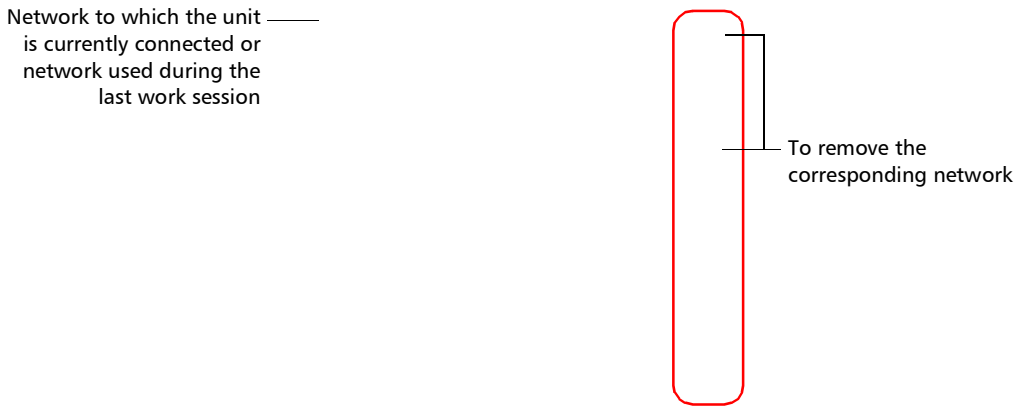

The network is removed from the list automatically.
In the EXFO Basecamp application, if these networks are still in range, they will reappear on the list of available networks, at the bottom of the page.

EXFO Basecamp application

Removed networks that are still in range appear here

Accessing the Online Documentation From the Smart Device

You can access the getting started guide from your unit.

For more detailed information, you can also access the user guide at all times from your smart device:

- by scanning the QR code displayed on your unit
- by using the corresponding link in the EXFO Basecamp application

To view the user documentation from the EXFO Basecamp application:

1. If it is not already done, establish a connection between your unit and a smart device (see *Establishing or Closing a Connection With a Smart Device Via the Bluetooth Technology* on page 49).
2.
3.

7 Maintenance

Pour garantir un fonctionnement durable de votre appareil dans des conditions optimales :

- Inspectez toujours les connecteurs à fibres optiques avant de les utiliser et nettoyez-les si nécessaire.
- Conservez l'appareil à l'abri de la poussière.
- Nettoyez le boîtier et le panneau avant de l'appareil à l'aide d'un chiffon légèrement humide.
- Entreposez l'appareil dans un endroit propre, sec et à température ambiante. Évitez toute exposition directe aux rayons du soleil.
- Évitez d'exposer l'appareil à un taux d'humidité élevé ou à des variations importantes de température.
- Dans la mesure du possible, évitez les chocs et les vibrations.
- En cas de déversement de liquide sur l’appareil ou à l’intérieur de celui-ci, éteignez immédiatement l'appareil, déconnectez-le de toute source d'alimentation externe, enlevez les batteries et laissez-le sécher complètement.

AVERTISSEMENT

L'utilisation de commandes, réglages et procédures, pour faire fonctionner ou entretenir l'appareil, autres que ceux indiqués dans le présent document peut entraîner une exposition dangereuse à des rayonnements ou provoquer une défaillance de la protection inhérente à l'appareil.

Cleaning Lenses

Keeping your unit's lenses clean and free of dust will ensure that you get the optimum performance out of your unit. The following recommendations will help you with the cleaning process:

- With a filtered air blower or a soft bristled brush, remove as much dust and dirt as possible.
- Apply a few drops of cleaning solution, which is used to clean camera lenses, on a lens tissue, a cleaning cloth or a lint-free swab. The lens cleaning solution especially manufactured by camera lens manufacturers can be used safely. Reagent grade isopropyl alcohol as well as deionized water can also be used safely.
- Gently remove oil, fingerprints and grime from the lens surface, using a circular motion from the center outwards.

To clean lenses:

1. If necessary, turn off your unit and remove the protective cap.
2. Turn the SmartTip retaining screw counterclockwise (about a quarter turn) until the SmartTip is loose.

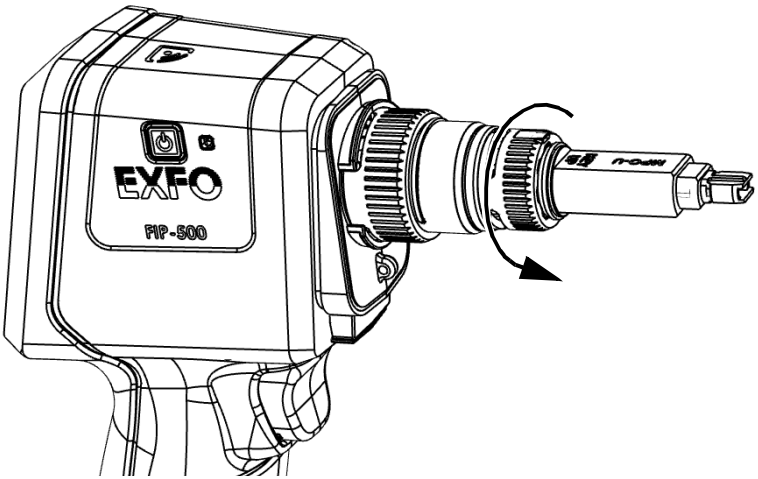

3. Pull on the SmartTip to remove it.

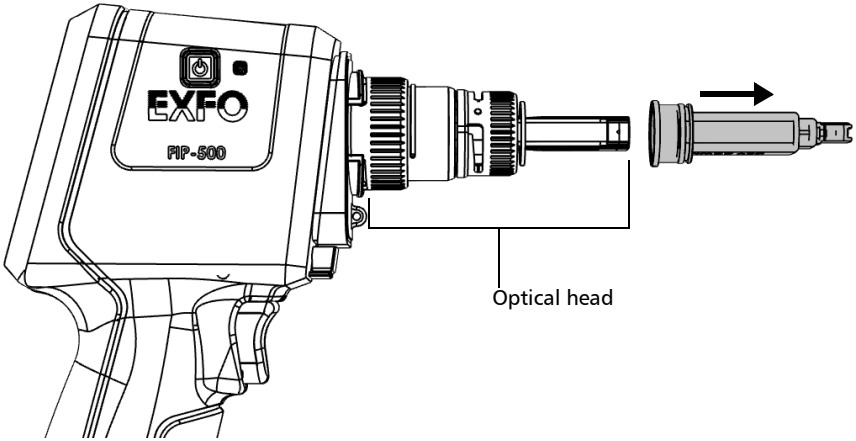

4. Clean the lens that is located at the end of the optical head.

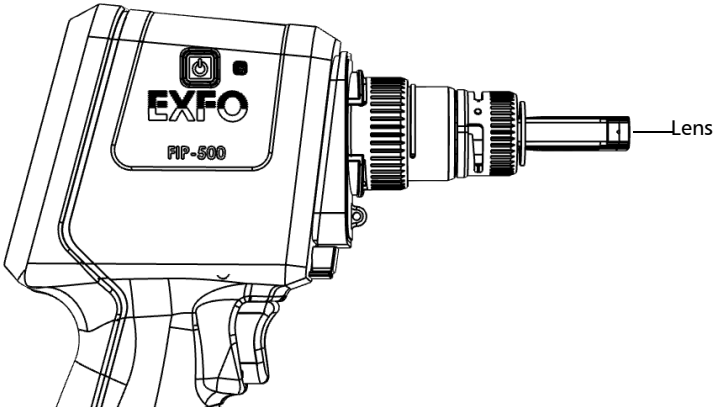

5. Using a lint-free swab, clean the inner part of the lens that is located at the end of the optical head.

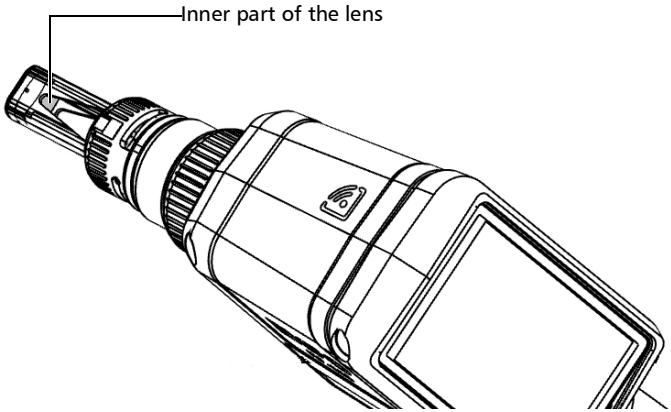

6.

7.

8.

9.

10.

11.

Cleaning the Touchscreen

Clean the touchscreen with a soft, non-abrasive cloth, such as one used for cleaning reading glasses, dampened with water.

CAUTION

Using anything else than water can damage the special coating of the touchscreen.

Recommandations d'entretien de la batterie

AVERTISSEMENT

L’appareil utilise les types de batterie suivants : Smart lithium-ion (Li-ion) or lithium-polymer (Li-Po).

Il s’agit de batteries avec protection intégrée spécialement conçues pour EXFO. Pour cette raison, vous ne pouvez la remplacer qu'avec une batterie du même type et modèle.

AVERTISSEMENT

L'utilisation de batteries non agréées peut entraîner un gonflement ou une inflammation de la batterie (c’est-à-dire qu’elle prend feu).

AVERTISSEMENT

Risque d’explosion si la batterie de remplacement est d’un type incorrect. Mettez les batteries usagées au rebut conformément aux instructions du fabricant.

AVERTISSEMENT

Ne jetez pas les batteries au feu ni dans l'eau et ne court-circuitez pas leurs contacts électriques. Ne tentez pas de démonter les batteries.

IMPORTANT

Recyclez ou mettez convenablement les batteries usagées au rebut conformément à la législation locale. Ne les jetez pas dans les bacs à ordures ordinaires. Pour plus d'informations, consultez la section consacrée au recyclage et à la mise au rebut dans cette documentation utilisateur.

- Chez EXFO, nous prenons très au sérieux la sécurité de nos clients et nous voulons nous assurer que le remplacement des batteries est correctement effectué.

  Les batteries de tous les produits de marque EXFO sont testées, certifiées et conformes à ces normes de sécurité internationales :

  - Homologation transport des Nations Unies (UN) UN38.3 : concerne la sécurité des batteries lors d'un transport aérien.
  - UL 61010-1, CAN/CSA C22.2 61010-1 et norme internationale IEC/EN 61010-1 : concerne l'utilisation des batteries pour des équipements de test et de mesure.
  - Norme internationale IEC 62133: concerne les cellules secondaires et les batteries alcalines ou contenant d'autres électrolytes non acides.
  - Dans certains pays où cette obligation s'applique, les batteries agréées EXFO ont été certifiées et marquées conformément à la réglementation locale.

- Pour obtenir les prix et les références correctes des batteries de rechange destinées à vos produits, veuillez contacter (par e-mail) :
  - Pour les Amériques : Isales.us@exfo.com
  - Pour l'Europe : Isales.emea@exfo.com
  - Pour l'APAC : Isales.apac@exfo.com
  - Pour la Chine : Isales.China@exfo.com

- Vous pouvez également vous procurer des batteries de rechange pour vos produits en contactant votre distributeur local :

  https://www.exfo.com/en/how-to-buy/find-distributor

- Vous pouvez retourner votre appareil pour le faire réparer dans votre centre d'entretien local :

  https://www.exfo.com/en/services/field-network-testing/exfo-service-centers/

Recharging the Battery

Your unit uses one smart lithium-ion (Li-ion) or one lithium-polymer (Li-Po) battery.

- The charge status is shown in the upper right corner of the title bar. A red icon indicates that the battery level is running low and that you should connect the unit to a power outlet. For more information, see *Battery Status Icon Description* on page 6.
- The unit also indicates the charge status with the LED on its side (see *LED Indicators Description* on page 4).

CAUTION

Only charge the battery with the USB power adapter provided by EXFO with your unit.

You can purchase new batteries from EXFO.

IMPORTANT

- **The battery is not charged at the factory. You must fully charge it before using the unit for the first time. The battery is fully charged after a few hours or when the battery LED indicator is steady blue.**
- **The time required to charge the battery depends on various factors such as the type of tests currently performed and the ambient temperature.**
- **To ensure that the battery functions properly, keep it in temperatures between –10 °C and 45 °C (14 °F and 113 °F). Store it between 10 °C to 35 °C (50 °F to 95 °F).**
  When the ambient temperature is below 0 °C (32 °F) or when it reaches or exceeds about 40 °C (104°F), the battery can either charge more slowly than usual, or not charge at all, depending on the internal temperature of your unit.
- **Do not leave a battery discharged for several days.**
- **After 300 cycles (approximately 18 months of use), you may want to replace the battery with a new one to maintain optimal operation conditions. Otherwise, the operating time might be reduced.**

IMPORTANT

- **If you need to store the unit (or a battery) for an extended period of time, ensure that the battery is charged at around 50 % of its capacity, and then turn the unit off (shutdown).**
- **Place the unit (or the battery) in a cool dry place, and ensure that the battery is charged at around 50 % of its capacity. Every three months during the storage period, verify the battery level. Recharge the battery when necessary, so that its charge level remains around 50 % of the total capacity. This will ensure that you get the optimum performance out of the battery.**

To recharge the battery:

Connect the unit to a power outlet using the USB power adapter (fastest way to charge the battery).

Note: *The standard USB ports of a computer cannot power your unit or charge its battery while the unit is on. If you connect your unit to such a USB port with the USB cable, the unit will still consume battery power. If the unit is off when you connect it to the USB port of a computer, its battery could charge, but slowly.*

Note: *If you have a vehicle equipped with dedicated USB charging ports, you could connect your unit to one of these ports to charge the battery. The actual results will vary with each vehicle. You could also use a certified USB power bank (portable charger) to charge your unit.*

The charge cycle will start and end automatically.

Replacing the Battery

Your unit can be powered either by battery or from an appropriate power outlet when used with the provided USB power adapter.

WARNING

- **Your unit uses a smart lithium-ion (Li-ion) or lithium-polymer (Li-Po) battery with built-in protection that has been especially designed for EXFO. For this reason, you can only replace it with batteries of the same type and model. The use of other batteries may damage your unit and compromise your safety.**
  You can purchase new batteries from EXFO.
- **Battery replacement should only be done by a qualified technician with the appropriate tools on an electronic bench or similar environment.**

For more information on the available power sources for your unit, as well as their characteristics, refer to the *Technical Specifications* of your product.

CAUTION

Electrostatic discharge (ESD) damage can cause complete or intermittent equipment failures.

- **Always use an ESD-preventive wrist or ankle strap when replacing the battery. Ensure that the antistatic strap makes good skin contact and that the end of its wire is grounded properly.**
- **Never touch any component inside the unit other than those identified in the procedure hereafter, either with tools or your fingers.**

To replace the battery:

1. Turn off the unit (shutdown) and disconnect USB cable (if applicable).
2. Position the unit so that its side panel with the on/off button rests on a flat surface such as a table.
3. On the case of the unit, using a 2.5 mm hex socket screwdriver, turn the screws (6) counterclockwise until they are loose, and remove them.

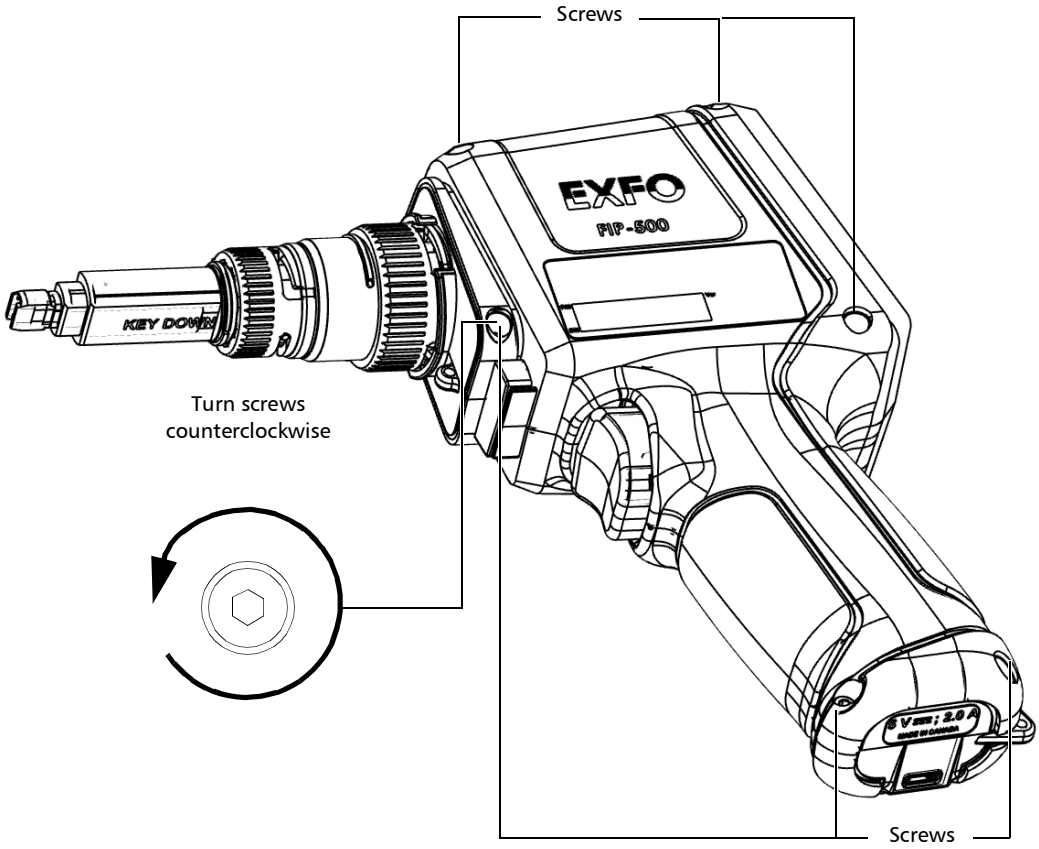

4. Hold the cover by its sides and pull it up to remove it.

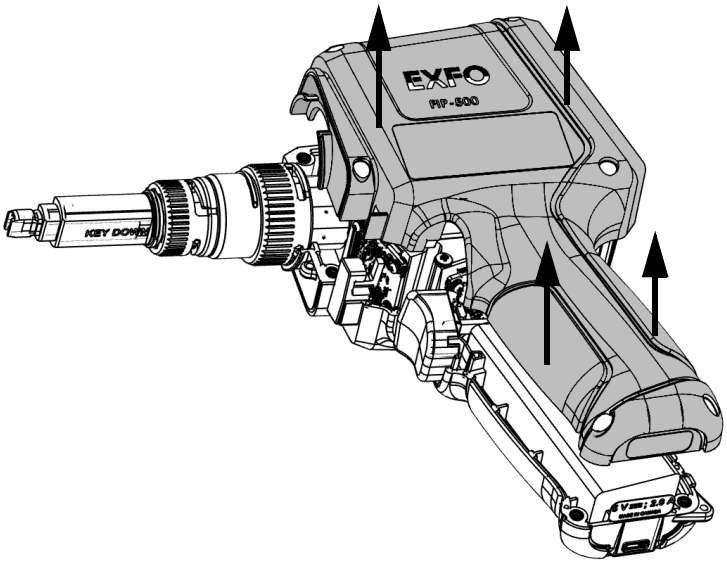

5. Gently pull on the battery's connector to disconnect it from its socket.

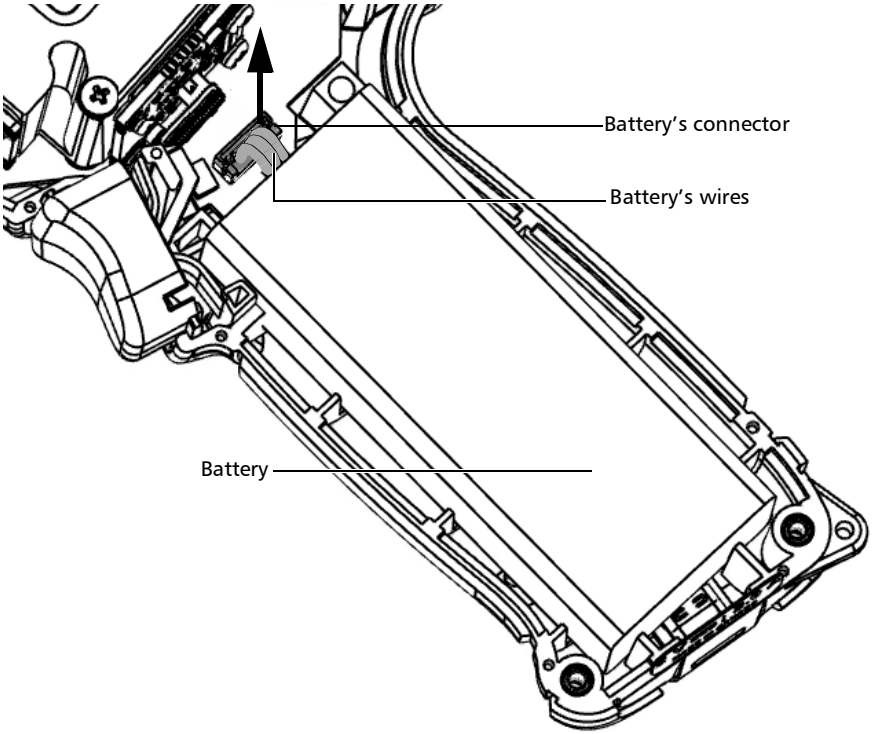

6. Pull the battery up to remove it.

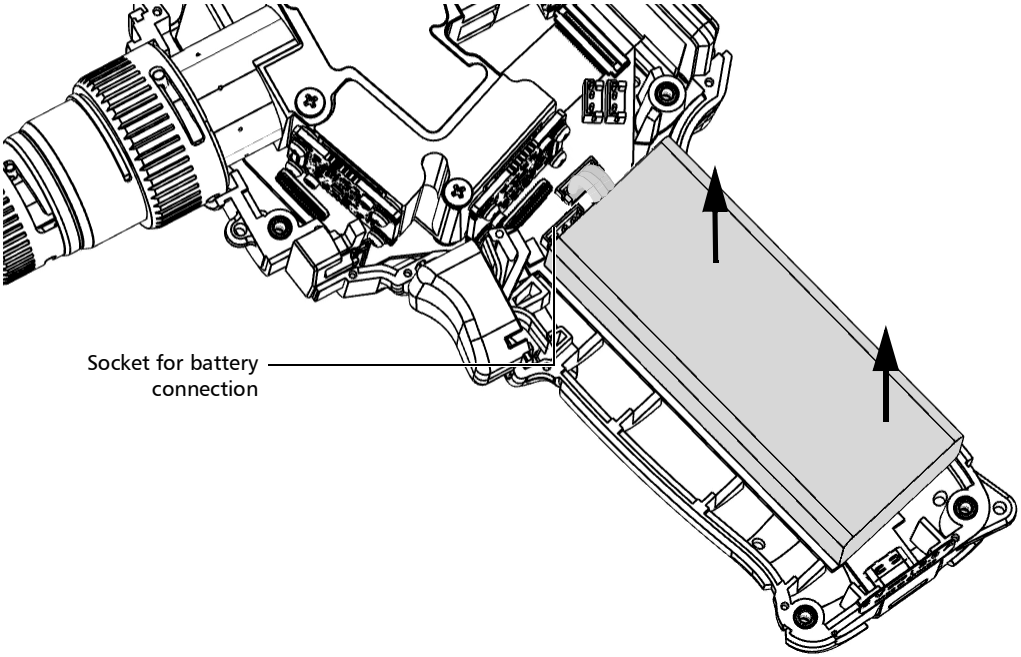

7. Place the new battery so that its wires and connector are located on the same side as the socket in your unit's case. The battery's connector should be facing down.

8. Push the new battery toward the bottom of the case until it stops.

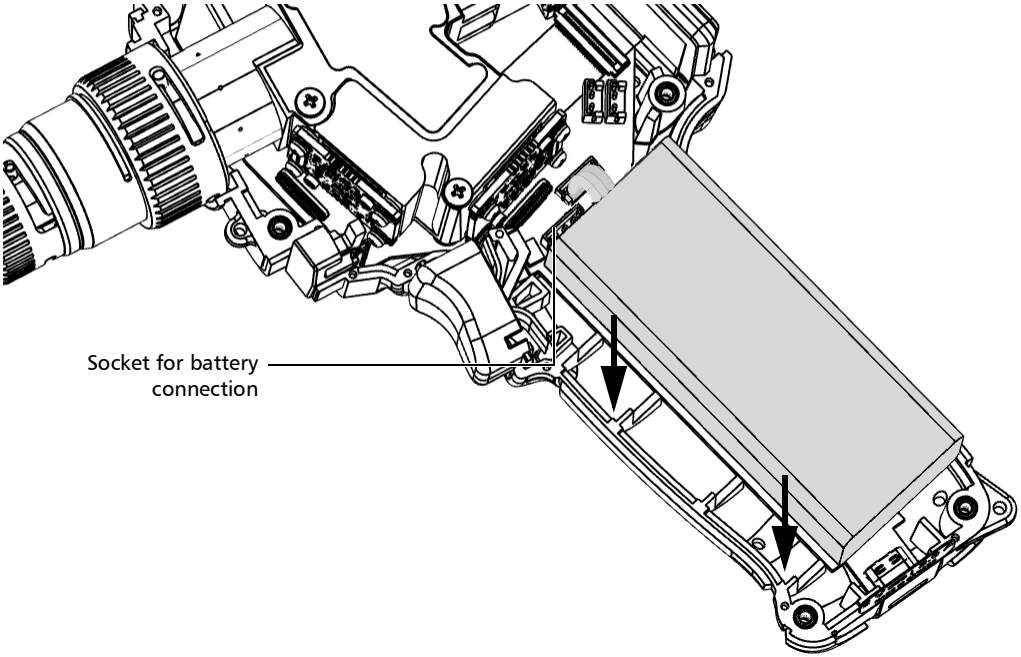

9. Connect the battery's connector to the corresponding socket.

10. Carefully place the side panel back on the unit, making sure that it is aligned properly with the other side of the unit and that the trigger has not moved. There should be no gap between both sides of the unit. If necessary, slightly move the side panel until alignment is correct.

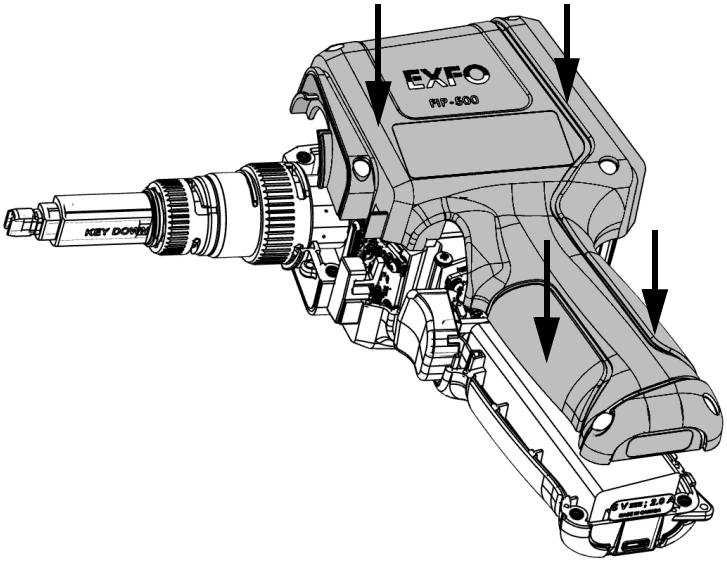

11. Using a 2.5 mm hex socket screwdriver, turn the screws (6) clockwise until they are tightened.

This will secure the side panel into place.

IMPORTANT

- **If the battery LED turns to red when you turn on the unit, simply connect the unit to a power outlet and let the new battery charge for a few minutes.**
- **It could take a few charge/discharge cycles before the batery LED indicator and the on-screen battery status icon reflect the actual power level of the new battery.**

Upgrading Applications and Firmware

Note: *You need a smart device equipped with the EXFO Basecamp application to be able to configure a wireless network, connect your unit to it, and then receive the available updates.*

All the necessary applications have been preinstalled and configured at the factory. However, you may have to upgrade some of them or upgrade the firmware when new versions become available.

Your unit allows you to check for updates, download these updates and install them directly.

Note: *Your unit must have access to an Internet connection (via Wi-Fi) to be able to download updates and install them.*

IMPORTANT

For a trouble-free upgrade, ensure that you connect your unit to a power outlet and that your unit remains on during all the process.

To upgrade applications or firmware:

1. Connect your unit to an external power source with the provided USB power adapter.
2. If it is not already done, turn on your unit.
3. Ensure that your unit has access to the Internet (see *Working With a Wireless Network* on page 52).
4. Follow the on-screen instructions. If an update is available and you choose to install it, your unit will restart automatically at the end to complete the process.

Recyclage et mise au rebut

Ce symbole apposé sur le produit signifie que vous devez recycler ou mettre votre produit au rebut (accessoires électriques et électroniques inclus) conformément aux réglementations locales en vigueur. Ne le jetez pas dans les bacs à ordures ordinaires.

Pour en savoir plus sur le recyclage/la mise au rebut, consultez le site Web d'EXFO à l'adresse www.exfo.com/recycle.

8 Troubleshooting

Solving Common Problems

Problem	Possible Cause	Solution
My unit does not start.	The battery is completely discharged (if the battery level allows it, the unit's LED will remain red for about 10 seconds when you try to turn on the unit).	Connect the unit to an external power source to recharge the battery. If the battery is no longer charging properly, you may need to replace it with a new one (see *Replacing the Battery* on page 69).
	The system has encountered a problem.	Press the on/off button for at least ten seconds to force a hardware reset on the unit. If the problem persists, restore your unit to normal operation (see *Restoring Your Unit to Normal Operation* on page 83).
	Some files essential to the normal operation of the unit have been corrupted.	Press the on/off button for at least ten seconds to force a hardware reset on the unit. If the problem persists, try resetting the FIP-500 to its factory settings (see *Reverting to Factory Settings* on page 34). If the problem still persists, restore your unit to normal operation (see *Restoring Your Unit to Normal Operation* on page 83).
My unit is not responding.	The system has encountered a problem.	Press the on/off button for at least ten seconds to force a hardware reset on the unit.

Problem	Possible Cause	Solution
The battery is not recharging.	Ambient temperature is too high or too low.	In this case, the unit's LED is blue and blinks slowly. Make sure that the temperature in the location where you recharge the battery is within the specifications.
	The USB power adapter is not connected properly.	Make sure that the USB power adapter is connected to the unit and the AC outlet. In this case, the unit's LED is not blinking at all, but there is a battery icon with a flash symbol displayed on screen. If the USB power adapter is connected properly and the problem persists, it could mean that the USB power adapter is defective. In this case, try replacing the adapter. You can purchase new USB power adapters from EXFO.
I have just replaced the battery and the unit's LED turns to red when I turn on the unit.	The unit may take a little time to detect the level of a new battery.	Connect the unit to a power outlet with the provided USB power adapter and let the battery charge for a few minutes. After a short while, the unit should turn on. However, it could take a few charge/discharge cycles before the unit's LED indicator and the on-screen battery status icon reflect the actual power level of the new battery.

Problem	Possible Cause	Solution
On my unit, no wireless network is listed.	No network has been configured yet.	You must first configure the desired networks on your smart device, using the FIP-500 tool in the EXFO Basecamp application (see *Working With a Wireless Network* on page 52).
My unit does not connect automatically to the wireless network that I have used during my last work session.	There is a connection problem with the network.	➤ Ensure that the Wi-Fi connection is enabled on your unit (see *Enabling or Disabling the Wireless Communication* on page 51). ➤ In the case of a secured network, ensure that the password has not changed since the initial configuration of this network. If the password is no longer valid, you will have to update it using the EXFO Basecamp application (see *Working With a Wireless Network* on page 52). ➤ Ensure that the network is working normally.

Problem	Possible Cause	Solution
My unit does not connect to the wireless network that I choose from the list of configured networks.	There is a connection problem with the network.	➤ Ensure that the Wi-Fi connection is enabled on your unit (see *Enabling or Disabling the Wireless Communication* on page 51). ➤ In the case of a secured network, ensure that the right password has been entered and that it has not changed since the initial configuration of this network. You will have to re-enter the password or update it using the FIP-500 tool in the EXFO Basecamp application (see *Working With a Wireless Network* on page 52). ➤ Ensure that the network is working normally.
My unit cannot connect to a Wi-Fi network even though I have configured all parameters correctly.	Since every network has its own specifications, there may be elements that are not compatible with your unit.	Configure a Wi-Fi hotspot on a smart device or a laptop that you will use to give your unit access a wireless network. When it is done, add this Wi-Fi hotspot to the list of configured networks as you would with any Wi-Fi networks (see *Configuring a Wireless Network* on page 55).

Problem	Possible Cause	Solution
I cannot use the EXFO Basecamp application anymore.	The SSL certificate is no longer valid.	➤ You need to update the EXFO Basecamp application on the smart device and establish a Bluetooth® connection with the FIP-500. ➤ If this does not work, contact EXFO.

Restoring Your Unit to Normal Operation

If you ever encounter major problems with your unit (for example, the unit does not behave the way it used to), you can revert it to its initial state (as it was at time of purchase).

CAUTION

- **Once the recovery operation is started, it cannot be cancelled. Make sure to transfer any data that you wish to keep prior to starting the recovery operation, as they will be permanently lost. Data transfer is only possible for units used in conjunction with the EXFO Basecamp application through the synchronisation process. See *Synchronizing Job Results With the Smart Device and the Cloud Server* on page 60.**
- **Follow the procedure below carefully and connect your unit to a power outlet using the provided USB power adapter when you are instructed to do so.**

CAUTION

Electrostatic discharge (ESD) damage can cause complete or intermittent equipment failures.

- **Always use an ESD-preventive wrist or ankle strap when opening your unit. Ensure that the antistatic strap makes good skin contact and that the end of its wire is grounded properly.**
- **Never touch any component inside the unit other than those identified in the procedure hereafter, either with tools or your fingers.**

To restore you unit to normal operation:

1. If desired, transfer the data that you wish to keep (see *Generating Measurement Reports* on page 47 and *Synchronizing Job Results With the Smart Device and the Cloud Server* on page 60).

Note: *You cannot transfer data when the FIP-500 is used as a standalone unit (without a smart device).*

2. Ensure that the battery level of your unit will be sufficient to start the unit when instructed to do so (no red battery icon on screen or red, steady LED on the unit's front panel).
3. Turn off your unit (shutdown).

4. If applicable, disconnect the USB cable. This is necessary to be able to open the unit as explained hereafter.
5.
6.

CAUTION

To avoid damaging your unit, do not use metallic objects such as the ball of a pen to push the reset button. Always use your finger or a non-metallic object.

7.
8.

CAUTION

DO NOT TURN OFF your unit while the recovery operation is underway. Doing so may damage your unit. Damaged units will need to be sent back to EXFO for repair.

9.
10.
11. Connect your unit to a power outlet using the provided USB power adapter. This will ensure that your unit remains powered on during the whole recovery operation.
12.
13.
14. Once your unit has restarted, set the operation language, read and accept the EXFO license agreement, and configure the date and time, as you did when you first received your unit (see *Configuring Your Unit at First Startup* on page 21).

Accessing the Online Documentation From the FIP-500

For more detailed information, you can also access the user guide at all times from your smart device:

- by scanning the QR code displayed on your unit
- by using the corresponding link in the EXFO Basecamp application (see *Accessing the Online Documentation From the Smart Device* on page 58)

Note: *The user guide is available from the My EXFO section of the EXFO Web site (www.exfo.com) for download in PDF format.*

Note: *You can exit the Getting started guide at any time by using the X.*

To access the user guide with the QR code:

1.

2.

Contacting the Technical Support Group

To obtain after-sales service or technical support for this product, contact EXFO at one of the following numbers. The Technical Support Group is available to take your calls from Monday to Friday, 8:00 a.m. to 7:00 p.m. (Eastern Time in North America).All inquiries regarding service, calibration and technical assistance should be directed to the Customer Service department:

Technical Support Group
400 Godin Avenue
Quebec (Quebec) G1M 2K2
CANADA

1 866 683-0155 (USA and Canada)
Tel.: 1 418 683-5498
Fax: 1 418 683-9224
support@exfo.com

For detailed information about technical support, and for a list of other worldwide locations, visit the EXFO Web site at www.exfo.comIf you have comments or suggestions about this user documentation, you can send them to customer.feedback.manual@exfo.com.

To accelerate the process, please have information such as the name and the serial number (see the product identification label), as well as a description of your problem, close at hand.

Sharing Information With the Technical Support Group

After contacting EXFO for support, you may need to share some of the measurements or error reports with the technical support group for further investigation.

Note: *You must contact the technical support group before sharing measurements or error reports. Otherwise, no measurements or error reports will be processed or archived.*

Note: *You must contact the technical support group if you want to share job measurements.*

Your unit will need access to a Wi-Fi connection to be able to share results. If you have not configured any Wi-Fi network yet, see *Working With a Wireless Network* on page 52.

Note: *To be able to send measurements and error reports to the technical support group, you must read and accept the privacy and security policies.*

To share information with the technical support group:

1.

2.

A confirmation message is displayed as soon as the transfer is complete.

Viewing System Information

You can easily access important information such as the model of your unit, the serial number, the software and hardware versions, as well as the latest hardware calibration, directly from your unit. You can also find the contact information if you ever need to reach EXFO.

To view the system information:

1. From the main menu, tap **Settings**.

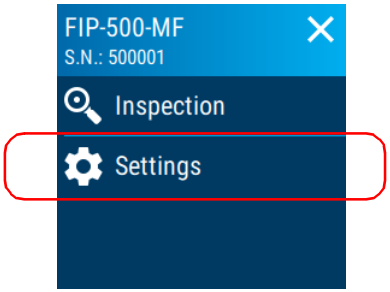

2. Scroll down to the **Unit settings** section.
3. Tap **About**.

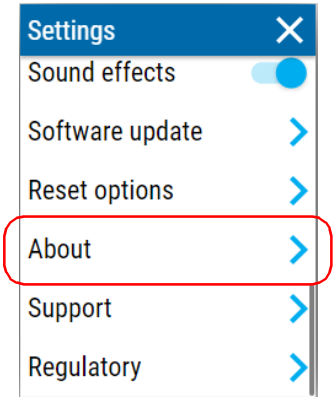

The information you want to view is displayed on screen.

To retrieve the contact information:

1. From the main menu, tap **Settings**.

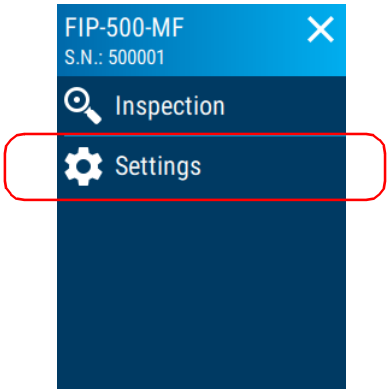

2. Scroll down to the **Unit settings** section.
3. Tap **Support**.

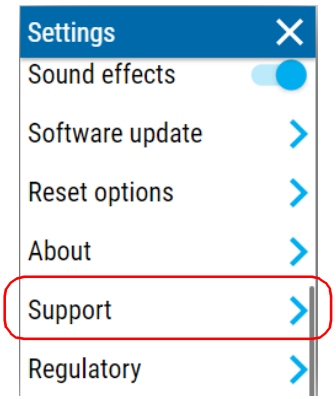

The information you want to view is displayed on screen.

Transportation

Maintain a temperature range within specifications when transporting the unit. Transportation damage can occur from improper handling. The following steps are recommended to minimize the possibility of damage:

- Pack the unit in its original packing material when shipping.
- Avoid high humidity or large temperature fluctuations.
- Keep the unit out of direct sunlight.
- Avoid unnecessary shocks and vibrations.

9 Warranty

General Information

EXFO Inc. (EXFO) warrants this equipment against defects in material and workmanship for a period of one year from the date of original shipment. EXFO also warrants that this equipment will meet applicable specifications under normal use.During the warranty period, EXFO will, at its discretion, repair, replace, or issue credit for any defective product, as well as verify and adjust the product free of charge should the equipment need to be repaired or if the original calibration is erroneous. If the equipment is sent back for verification of calibration during the warranty period and found to meet all published specifications, EXFO will charge standard calibration fees.

IMPORTANT

The warranty can become null and void if:

- **unit has been tampered with, repaired, or worked upon by unauthorized individuals or non-EXFO personnel.**
- **warranty sticker has been removed.**
- **case screws, other than those specified in this guide, have been removed.**
- **case has been opened, other than as explained in this guide.**
- **unit serial number has been altered, erased, or removed.**
- **unit has been misused, neglected, or damaged by accident.**

THIS WARRANTY IS IN LIEU OF ALL OTHER WARRANTIES EXPRESSED, IMPLIED, OR STATUTORY, INCLUDING, BUT NOT LIMITED TO, THE IMPLIED WARRANTIES OF MERCHANTABILITY AND FITNESS FOR A PARTICULAR PURPOSE. IN NO EVENT SHALL EXFO BE LIABLE FOR SPECIAL, INCIDENTAL, OR CONSEQUENTIAL DAMAGES.

Liability

EXFO shall not be liable for damages resulting from the use of the product, nor shall be responsible for any failure in the performance of other items to which the product is connected or the operation of any system of which the product may be a part.

EXFO shall not be liable for damages resulting from improper usage or unauthorized modification of the product, its accompanying accessories and software.

Exclusions

EXFO reserves the right to make changes in the design or construction of any of its products at any time without incurring obligation to make any changes whatsoever on units purchased. Accessories, including but not limited to fuses, pilot lamps, batteries and universal interfaces (EUI) used with EXFO products are not covered by this warranty.

This warranty excludes failure resulting from: improper use or installation, normal wear and tear, accident, abuse, neglect, fire, water, lightning or other acts of nature, causes external to the product or other factors beyond the control of EXFO.

IMPORTANT

In the case of products equipped with optical connectors, EXFO will charge a fee for replacing connectors that were damaged due to misuse or bad cleaning.

Certification

EXFO certifies that this equipment met its published specifications at the time of shipment from the factory.

Service and Repairs

EXFO commits to providing product service and repair for five years following the date of purchase.

To send any equipment for service or repair:

1. Call one of EXFO's authorized service centers (see *EXFO Service Centers Worldwide* on page 96). Support personnel will determine if the equipment requires service, repair, or calibration.
2. If equipment must be returned to EXFO or an authorized service center, support personnel will issue a Return Merchandise Authorization (RMA) number and provide an address for return.
3. If possible, back up your data before sending the unit for repair.
4. Pack the equipment in its original shipping material. Be sure to include a statement or report fully detailing the defect and the conditions under which it was observed.
5. Return the equipment, prepaid, to the address given to you by support personnel. Be sure to write the RMA number on the shipping slip. *EXFO will refuse and return any package that does not bear an RMA number.*

Note: *A test setup fee will apply to any returned unit that, after test, is found to meet the applicable specifications.*

After repair, the equipment will be returned with a repair report. If the equipment is not under warranty, you will be invoiced for the cost appearing on this report. EXFO will pay return-to-customer shipping costs for equipment under warranty. Shipping insurance is at your expense.

Routine recalibration is not included in any of the warranty plans. Since calibrations/verifications are not covered by the basic or extended warranties, you may elect to purchase FlexCare Calibration/Verification Packages for a definite period of time. Contact an authorized service center (see *EXFO Service Centers Worldwide* on page 96).

EXFO Service Centers Worldwide

If your product requires servicing, contact your nearest authorized service center.

EXFO Headquarters Service Center
400 Godin Avenue
Quebec (Quebec) G1M 2K2
CANADA

1 866 683-0155 (USA and Canada)
Tel.: 1 418 683-5498
Fax: 1 418 683-9224
support@exfo.com

EXFO Europe Service Center
Winchester House, School Lane
Chandlers Ford, Hampshire S053 4DG
ENGLAND

Tel.: +44 2380 246800
Fax: +44 2380 246801
support.europe@exfo.com

EXFO Telecom Equipment (Shenzhen) Ltd.
3rd Floor, Building C,
FuNing Hi-Tech Industrial Park, No. 71-3,
Xintian Avenue,
Fuhai, Bao'An District,
Shenzhen, China, 518103

Tel: +86 (755) 2955 3100
Fax: +86 (755) 2955 3101
support.asia@exfo.com

To view EXFO's network of partner-operated Certified Service Centers nearest you, please consult EXFO's corporate website for the complete list of service partners:
http://www.exfo.com/support/services/instrument-services/exfo-service-centers.

Index

A

AC requirements 17
accessing online help
  from the smart device..... 58
  from the unit 86
achat de batteries neuves..... 64
adaptateur 15
adjusting
  brightness..... 29
  date and time 30
after-sales service 87
appareil
  réparation..... 15
  ventilation 16
applications, installing 76
automatic
  connection to network 56
available models..... 8

B

backlight, setting 29
batterie
  recommandations d'entretien..... 63
batteries
  achat de batteries neuves 64
batteries de rechange..... 64
battery
  level 66, 75, 80
  maintenance recommendations 66
  recharging 3, 7, 66, 68
  replacing or removing 69, 70
  resetting information..... 34
  status icons..... 6, 66, 75, 80
  status LED..... 2, 4, 19, 66, 75, 80
  type allowed 69
blinking LED 4
bloc d'alimentation externe..... 15
blue LED 4
Bluetooth®
  closing connection 49
  data transfer 49
  données de bande de fréquences . vii, viii, x
  establishing connection 49, 50
  signal strength 50
  status 49, 50
boot, first 21
brightness
  adjusting..... 29
  icon..... 30
button, on/off..... 2, 4, 19, 67, 70

C

changing
  battery 69, 70
  date and time 30
charge
  icon..... 66, 75
  status of the battery 66, 75, 80
chargeur 15
charging battery..... 3
cleaning
  fiber ends..... 25
  touchscreen 62
closing a connection..... 49
colors, LEDs 4
condensateurs 15
configured networks 52, 55
configuring
  automatic connection 56
  brightness 29
  date and time 30
  delay before sleep 32
  unit 21
  Wi-Fi communication 51
  wireless network 52
connecting

to wireless network 52, 56
via Bluetooth® 49, 50
conventions, sécurité..... 9
current, electrical 17
customer service..... 95

D

data transfer 49
date and time, adjusting 30
deactivating Wi-Fi 51
decimal separator..... 1
default values..... 34, 83
disconnecting from Bluetooth®..... 49
documentation 58, 86

E

électrique
alimentation 15
enabling
Wi-Fi 51
entretien
batterie..... 63
informations générales 59
panneau avant..... 59
equipment returns 95
establishing a connection
via Bluetooth® 49, 50
with a wireless network..... 56
EXFO Basecamp application, installation..... 48
exigences c.a. 16

F

factory settings 34, 83
favorite networks 52, 55
fiber ends, cleaning..... 25
Fiber Xplorer 22
first
startup..... 21
forget networks 57
fréquences, Bluetooth® et Wi-Fi ..... vii, viii, x

H

help, online 58, 86
high temperature 27
hour, setting..... 30

I

icon
battery status..... 6, 66, 75, 80
Bluetooth® status..... 49, 50
brightness..... 30
Wi-Fi status 54
identification label..... 87
informations réglementaires..... v
input current 17
inserting battery 69, 70
installing
EXFO Basecamp application..... 48
software..... 76
internal
temperature..... 7, 27
IPv4 wireless routers characteristics..... 53

L

label, identification..... 87
LED
battery status..... 2, 19, 66, 75, 80
indicators..... 4
Li-ion/Li-Po battery 7, 66, 69
list
of configured networks 52, 55
of networks, removing item from 57

M

main features 1
maintenance
battery 66
screen 62
manuals..... 58, 86
maximum
input current..... 17

mise en garde
danger produit 9
danger utilisateur 9
models
available 8

N

nettoyage
panneau avant..... 59
network
failure 56
password 55
settings..... 55

O

off LED 4
on/off button 2, 4, 19, 67, 70
online help 58, 86
options, Bluetooth® 49

P

panneau avant, nettoyage 59
port
USB..... 3
power
adapter..... 7, 68
bank 7, 68
button 2, 4, 19, 67, 70
management 32
see also battery
see also USB power adapter
sources 17
preferred networks..... 52, 55
preventing automatic Wi-Fi connection..... 57
product
identification label..... 87

R

receiving data via Bluetooth® 49
recharging the battery 7, 66, 68
recovery operation..... 83
red LED 4, 80
regional and language settings 21
removing
battery 69, 70
configured networks..... 57
réparation de l'appareil..... 15
replacing
battery 34, 69, 70
return merchandise authorization (RMA) 95
reverting unit to initial state 83

S

saved networks..... 52, 55
se procurer des batteries 64
secured network
configuring 55
icon..... 55
sécurité
avertissement..... 9
conventions 9
mise en garde 9
sending data via Bluetooth®..... 49
separator, decimal value..... 1
service and repairs..... 95
service centers 96
setting
automatic connection 56
brightness..... 29
date and time 30
reset..... 34, 83
sleep mode 32
software update 76
Wi-Fi communication 51
wireless network..... 52
shipping to EXFO..... 95
shutting down..... 20
signal
strength, Bluetooth®..... 50
strength, Wi-Fi 54, 55
sleep mode..... 20, 32

software, installing and upgrading 76
spécifications de stockage..... 59
spécifications de transport 59
status
Bluetooth®..... 49, 50
Wi-Fi 54
stopping
Wi-Fi communication..... 51
strength of the signal..... 54, 55
symboles, sécurité 9

T

technical support 87
température de stockage 59
temperature management 27
title bar 22, 54
touchscreen
cleaning..... 62
transferring
data via Bluetooth® 49
transportation requirements 91
turning on/off
unit..... 19, 20
Wi-Fi 51

U

understanding Fiber Xplorer 22
unit
first configuration..... 21
restoring..... 83
unexpected shutdown 27
updating applications 76
USB
port 3
power adapter..... 7, 68
power bank 7, 68
user guides..... 58, 86
utilisation en intérieur 15

V

ventilation 16

W

warranty
certification..... 94
exclusions 94
general..... 93
liability 94
null and void 93
Wi-Fi
connecting..... 52
données de bande de fréquences .vii, viii, x
status 54
wireless
IPv4 routers characteristics..... 53
network configuration 55
networks..... 52, 55
networks removed from list 57
wizard, configuration 21

CHINESE REGULATION ON RESTRICTION OF HAZARDOUS SUBSTANCES (RoHS)
中国关于危害物质限制的规定

NAMES AND CONTENTS OF THE TOXIC OR HAZARDOUS SUBSTANCES OR ELEMENTS CONTAINED IN THIS EXFO PRODUCT
包含在本 EXFO 产品中的有毒有害物质或元素的名称及含量

Part Name 部件名称	Lead 铅 （Pb）	Mercury 汞 （Hg）	Cadmium 镉 （Cd）	Hexavalent Chromium 六价铬 （Cr(VI)）	Polybrominated biphenyls 多溴联苯 （PBB）	Polybrominated diphenyl ethers 多溴二苯醚 （PBDE）
Enclosure 外壳	O	O	O	O	O	O
Electronic and electrical sub-assembly 电子和电气组件	X	O	X	O	X	X
Optical sub-assembly[a] 光学组件 [a]	X	O	O	O	O	O
Mechanical sub-assembly[a] 机械组件 [a]	O	O	O	O	O	O

Note:
注：
This table is prepared in accordance with the provisions of SJ/T 11364.
本表依据 SJ/T 11364 的规定编制。
O: Indicates that said hazardous substance contained in all of the homogeneous materials for this part is below the limit requirement of GB/T 26572.
O：表示该有害物质在该部件所有均质材料中的含量均在 GB/T 26572 标准规定的限量要求以下。
X: indicates that said hazardous substance contained in at least one of the homogeneous materials used for this part is above the limit requirement of GB/T 26572. Due to the limitations in current technologies, parts with the “X” mark cannot eliminate hazardous substances.
X：表示该有害物质至少在该部件的某一均质材料中的含量超出 GB/T 26572 标准规定的限量要求。
标记“X”的部件，皆因全球技术发展水平限制而无法实现有害物质的替代。
a. If applicable.
如果适用。

MARKING REQUIREMENTS
标注要求

Product 产品	Environmental protection use period (years) 环境保护使用期限 （年）	Logo 标志
This EXFO product 本 EXFO 产品	10	
Battery[a] 电池	5	

a. If applicable.
如果适用。

P/N: 1.0.0.1

www.EXFO.com · info@EXFO.com

CORPORATE HEADQUARTERS 400 Godin Avenue Quebec (Quebec) G1M 2K2 CANADA
Tel.: 1 418 683-0211 · Fax: 1 418 683-2170

TOLL-FREE (USA and Canada) 1 800 663-3936

© 2021 EXFO Inc. All rights reserved.
Printed in Canada (2021-01)