MG37

产品使用说明书

迷你掌上游戏机

-专注于游戏外设开发制造-

前 言

感谢您选择我们的游戏手柄。为给您带来愉快的 游戏体验，使用本手柄之前，请先阅读完整的手册及所有安全指示，以确保安全和正确使用。
本手册中的说明基于设备的默认设置。
本手册中的所有图片、陈述及文字信息仅供参考，请以实际产品为准；如有内容更新，恕不另行通知，这些更新会编入新版手册中。
可用功能和附加服务可能因设备、软件或服务提供商而有所不同。

产品适用说明

1. 适合操作 Android 系统 /iOS 系统 /PC(Win7/8/10) /Switch 主机 /PS4 主机 /PS3 主机 / 特斯拉车载系统 / 智能电视 / 电视盒子等平台的游戏；
2. 支持 Turbo 一键连发功能，解放双手，让游戏更简单；
3. 三个信号通道指示灯，精确指示手柄连接状态和电量状态；
6. 左右操纵杆可以 360°精准操作，帮助玩家实现微调、瞄准等高难度操作；
7. 精心设计 D-Pad可在八个方向上操作，按键流畅不粘键；
8. 轻巧按键布局，按键寿命可达上百万次，质量上乘，经久耐用；
9. 内置高容量聚合物锂电池，自带短路、过压保护，低 功耗高续航；
10. 人体工程学设计、舒适握把，轻巧结构使其长时间 使用舒适；
11. 上下左右以及 ABXY 键均有背灯，十分美观；
12. 本产品使用 TYPE-C 线充电，Type-C 接口正反可插，使用时不需要区分正反方向；

手柄图解

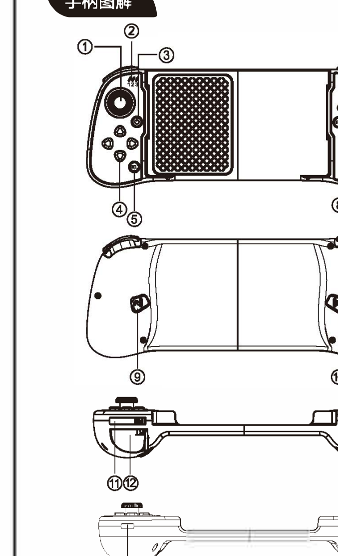

①左摇杆
②指示灯
③开关键
④方向键
⑤选择
⑥ ABXY 键
⑦右 3D 摇杆
⑧开始键
⑨清除键/截屏键
⑩连击键
⑪RB 键
⑫RT 键
⑬LT 键
⑭LB 键
⑮Type-C 接口
⑯复位孔

按键简介

1. 开关机键 1 个：开启手柄或执行主机的指令。
2.方向键 1 组：上、下、左、右。十字方向操作。
3. 功能控制键 4 个：A,B,X,Y。按键设计，手指触动操作更灵敏快捷。
4.左右摇杆 2 个：灵活的 3D 摇杆，360 度全方位精准操作。
5.功能键 4 个：L1、R1、L2、R2；新的按键设计，反应迅速。
6.Select1 个：按键设计，常用于唤醒菜单。
7.Start 键 1 个：按键设计，可用于确认当前操作。
8.Clear 键 1 个：关闭按键连发，在 ，Switch 模式下使用，可作为截屏键。
9. 复位键 1 个：长按 3 秒复位孔内的按钮，关闭手柄，使手柄与主机断开连接。
10.Turbo 键 1 个：可以设置使按键连发。

产品适用说明

1. 安卓 V3 蓝牙模式
①搜索下载安装 Shooting Plus V3 App：国内到各手机安卓市场搜索下载，海外到 Google Play Store 搜索下载；
②同时按住 B+ 开关键 2 秒，此时 LED1 指示灯快闪；③将安卓设备端的蓝牙打开，选择配对蓝牙名为 "GamepadPlus V3"的设备，连接成功，LED1 指示灯常亮；
④利用 ShootingPlus V3 App 工具调整键位可以玩更多游戏
a. 连接好手柄，打开 ShootingPlus V3 App，并把 App 推到后台；
b. 直接启动游戏后，点击屏幕上的 "V3" 悬浮球图标或按手柄上的"START"键进入 App 的改键界面；
c. 拖动改键界面内的键位图标到游戏上想要的操作位置。(点击键位图标可以选择键位属性)；
d. 点击菜单条上的"保存"，再"确认"保存；
e. 点击菜单条上的"关闭" 或再次按下"START"键(或再 次点击"V3"悬浮球图标)退出改键界面；
f. 游戏中，可以按下手柄上的"SELECT"键调出设置好 的键位提示；

2.iOS 苹果 V3 蓝牙模式
①搜索下载安装 ShootingPlus V3 App：请 到 App Store 搜索"ShootingPlus V3"下载；
②同时按住 X+ 开关键 2 秒，此时 LED1+LED2 指示 灯快闪；
③将苹果设备端的蓝牙功能打开，选择配对蓝牙名为 "GamepadPlus V3" 的设备，连接成功，LED1+LED2 指示灯常亮；
④支持 iPhone 手机或 iPad 平板设备 iOS13.3.8 以下系统；
⑤利用 ShootingPlus V3 App 工具调整键位可以玩更多游戏
a. 连接好手柄，打开 ShootingPlus V3 App，并把 App 推到后台；
b. 启动游戏，在游戏内对游戏进行截图（使用 iPhone 本身的组合键进行截图）。
c. 打开 ShootingPlus V3 App，点击 "V3" 悬浮球或按 手柄"START"键进入App 改键界面。
d. 长按屏幕空白处，开始加载游戏截图。点击选择图 片选择游戏截图(b. 操作的截图)。
(在选择图片过程中，会有访问相册提醒，请允许访 问)
e. 拖动改键界面内的键位图标到游戏上想要的操作 位置。(点击键位图标可以选择键位属性)
f. 点击菜单条上的"保存"，再"确认"保存。
g. 点击菜单条上的 "关闭" 或再次按下 "START" 键退 出改键界面。
⑥iOS13.4 以上的设备，请按住 A+ 开关键（LED2 快 闪）进入 IOS MFi 模式，手机搜索蓝牙名为 "DUALSHOCK 4 Wireless Controller" 的设 备，玩 ShanWan MFi APP 游戏厅平台里面的游戏；

3.NSwitch 蓝牙模式
①首次连接主机：在 NSwitch 主菜单界面点击 '手柄' → '更改握法 / 顺序'，进入到手柄配对模式；
②同时按住 R2+ 开关键 2 秒，此时 LED2 指示灯快 闪，手柄与主机自动配对，连接成功后，LED1 灯常亮！
③已成功连接过，可以直接按 开关键，LED2 慢闪，自动回连！

4.P4/P3 主机蓝牙模式
①将 TYPEC 数据线一端连接手柄，一端插入相应主机 的 USB 接口；
②按开关键配对，连接成功后拔掉数据线，此时 LED2 指示灯常亮！
③已成功连接过，可以直接按 开关键，LED2 慢闪，自动回连！

5. 笔记本电脑蓝牙模式
①同时按住 R1+ 开关键 2 秒，此时 LED1 指示灯快 闪；
②将电脑端的蓝牙打开，选择配对蓝牙名为 "Xbox Wireless Controller" 的设备，连接成功，LED1 指示灯常亮；
③建议玩 Steam 平台的游戏，注意在 "Steam- 设置 - 控制器 - 常用控制器设置"勾上支持选项；

6. 无线 2.4G 模式(需配我司接收器)：
①2.4G 无线接收器支持：PC 设备 / 特斯拉车载系统 /Switch 主机底座 / 智能电视 / 电视盒子 /PS3 主机；
②将 2.4G 无线接收器插入以上相应设备的 USB 接口；
③同时按手柄 L1+ 开关键 2 秒，手柄进入无线配对 模式，此时 LED1+LED2 指示灯快闪；
④无线连接成功后，LED1+LED2 指示灯长亮，可以开 始操作游戏；
⑤在连接 NSwitch 主机底座时，请确认 NSwitch 主机的系统设置中，'Pro 手柄的有线连接' 处于开启状态；

7. 有线模式
①有线支持：PC 设备 /Switch 主机底座 /PS3 主机 / 智能电视；
②PC 有线连接
使用 USB 线连接手柄和电脑，连接后手柄 LED1 亮 起，此时默认为 X-INPUT 模式；
长按 开关键 5 秒，切换为 D-INPUT模式，此时手柄 LED2 亮起；
建议玩 Steam 平台的游戏，注意在 "Steam- 设置 - 控 制器 - 常用控制器设置"勾上支持选项；
③NSwitch 有线连接
在连接 NSwitch 底座时，请确认 NSwitch 主机的系统 设置中，'Pro 手柄的有线连接' 处于开启状态；
使用所配 TypeC 线连接手柄和 NSwitch 底座，连接 成功后，相应的 LED 灯常亮；
④PS3 主机 / 智能电视有线连接：
插上 USB 线连接 PS3 主机 / 智能电视，连接后手柄 上对应的 LED 灯常亮；

8.TURBO 功能
① 动作键包括 (A/B/X/Y/L/ZL/R/ZR) 8 个按键，均可手动设置 TURBO 功能；
② 设置方式：按住动作键，再轻按 TURBO 键开启，按 住动作键，轻按 CLEAR 键，TURBO 功能关闭；
③ 产品休眠、关机重启后，之前设置 TURBO 功能自动 清除，若启用 TURBO 功能时，必须重新设置；

9. 手柄充电 / 休眠 / 唤醒 / 关机功能：
① 手柄充电功能：
a. 低电时，LE3 指示灯快闪提示；
b. 充电时，LED3 指示灯慢闪提示；
c. 充满时，LED3 指示灯长亮提示；
② 手柄休眠 / 唤醒 / 关机功能：
a. 五分钟之内没有任何按键按下则自动休眠；
b. 当需要重新使用时按 开关键 1 秒唤醒手柄，即可回连；
c. 在开机状态下，长按 开关键 5 秒，产品关机，所有 LED 指示灯熄灭；

手柄参数表

项目	参考值
工作电压	DC 3.3-4.2V
工作电流	25mA
待机电流	10-20uA
TYPE-C输入电压/电流	DC 5V/500mA
使用距离范围	≤8M
电池电压 / 容量	3.7V/300mAh
充满电后电池持续使用时间	4-10 小时左右
充电时间	2 小时左右
待机时间	30 天左右

备注：以上参数仅供参考，以产品实际使用为准

注意事项

1. 请不要把本产品在潮湿或高温地方存储。
2. 不要敲击、摔打、刺穿、或试图去分解本产品，以免对产品造成不必要的 损害。
3. 本产品属于电子类产品，请勿和垃圾一起丢弃。
4. 不要在靠近火或其它热源的地方对手柄进行使用。
5. 未授权或是非专业人员请勿拆卸本产品，否则，此产品不在售后保修范围内。

产品保修卡

产品名称			生产日期	
用户名		电话	序列号	
用户地址	省	市	邮编	
购买商品			购买日期	年 月 日
详细描述	注：请填写故障现象、故障时间、环境和故障发生时的机器的工作情况			

维护记录	日期	故障现象	处理方法	维护人员签名

SMS-MG37-ENG/CHN-C99999-V001

MG37

Product Manual

Stretch Controller Manual

— Focus On Game and AccessoriesR&D —

Preface

Thank you for choosing our game controller. To give you a pleasant gaming experience, please read the complete manual and all safety instructions before using this controller to ensure safe and correct use.
The instructions in this manual are based on the device's default settings.
All pictures, statements and text information in this manual are for reference only, please refer to the actual product; if there are any updates to the content without prior notice, these updates will be incorporated into the new version of the manual.
Available features and additional services may vary depending on the device, software or service provider

Product application instructions

1.Suitable for operating games on Android system/iOS system/PC (Win7/8/10)/Switch console/PS4 console/PS3 console/Tesla vehicle system/smart TV/TV box and other platforms;
2.Supports Turbo one-click burst function, freeing your hands and making the game easier;
3.Three signal channel indicators accurately indicate the controller connection status and battery status;
6.The left and right joysticks can be operated with 360° precision, helping players achieve difficult operations such as fine-tuning and aiming;
7.The carefully designed D-Pad can be operated in eight directions, and the keys are smooth and non-stick;
8. Lightweight key layout, key life can reach millions of times, high quality and durable;
9. Built-in high-capacity polymer lithium battery, with built-in short circuit and over-voltage protection, low power consumption and high battery life;
10.Ergonomic design, comfortable grip, and lightweight structure make it comfortable to use for a long time;
11.The up, down, left, right and ABXY keys have backlight, which are very beautiful;

Controller diagram

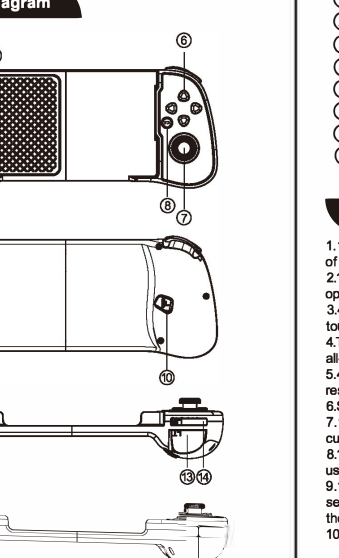

①Left 3D joystick
②Indicator
③Switch button
④Direction keys
⑤Select
⑥ABXY keys
⑦Right 3D joystick
⑧Start button
⑨Clear key/Screenshot
⑩Turbo button
⑪RB key
⑫RT keys
⑬LT keys
⑭LB key
⑮Type-C
⑯Reset

Button Introduction

1.1 power button: turn on the controller or execute the instructions of the console.
2.1 group of direction keys: up, down, left, right. Cross direction operation;
3.4 function control keys: A, B, X, Y. Button design makes finger touch operation more sensitive and faster.
4.Two left and right joysticks: flexible 3D joysticks, 360-degree all-round precise operation.
5.4function keys: L1, R1, L2, R2. New button design, quick response.
6.Select 1: button design, often used forwake-up menus.
7.1 start button: button design, which can be used to confirm the current operation.
8.1 clear key: Turn off key bursts. Used in Switch mode, it can be used as a screenshot key.
9.1 reset button: Press and hold the button in the reset hole for 3 seconds to close the controller and disconnect the controller from the console.
10.1 turbo key: You can setthe keys to fire continuously.

Product instructions

1. Android V3 Bluetooth mode
①Search, download and install Shooting Plus V3 App: Search and download to theAndroid market in China, and search and download in Google Play Store in overseas;
②Press and hold the B+Switch button simultaneously for 2 seconds. At this time, the LED1 indicator light flashes quickly;
③Turn on Bluetooth on the Android device and select the paired Bluetooth device named "Gamepad Plus V3". The connection is successful and the LED1 indicator light is always on;
④Use the Shooting Plus V3 App tool to adjust the key positions to play more games
a.Connect the controller, open the Shooting Plus V3 App, and push the App to the background;
b.After launching the game directly, click the "V3" floating ball icon on the screen or press the "START" key on the controller to enter the app's key changing interface;
c.Drag the key icon in the key changing interface to the desired operation position in the game
Set. (Click the key icon to select key properties);
d.Click "Save" on the menu bar, and then "Confirm" to save;
e.Click "Close" on the menu bar or press the "START" key again (or click the "V3" floating ball icon again) to exit the key changing interface;
f.During the game, you can press the "SELECT" key on the controller to callou the set key prompts;

2.iOS Apple V3 Bluetooth mode
①Search, download and install "Shooting Plus V3 "App in App Store ;
②Press and hold the X+Switch button at the same time for 2 seconds. At this time, the LED1+LED2 indicators will flash quickly;
③Turn on the Bluetooth function on the Apple device and select the paired Bluetooth device named "Gamepad Plus V3". The connection is successful and the LED1+LED2 indicators are always on;
④Supports iPhone or iPad tablet devices and systems below iOS13.3.8;
⑤Use the Shooting Plus V3 App tool to adjust the key positions to play more games
a. Connect the controller, open the Shooting Plus V3 App, and push the App to the background;
b. Start the game and take a screenshot of the game in the game interface (use the iPhone's own screenshot buttons).
c. Open the Shooting Plus V3 App, click the "V3" floating ball or press the "START" key on the controller to enter the App key changing interface.
d. Press and hold a blank area on the screen to start loading game screenshots. Click to select the picture to select the game screenshot (b. Screenshot ofthe operation).
(During the process of selecting pictures, there will be a reminderto access the album, please allow access).
e. Drag the key icon in the key changing interface to the desired operation position on the game. (Click the key Icon to select key attributes)
f. Click "Save" on the menu bar, and then "Confirm" to save.
g.Click "Close" on the menu bar or press the "START" key again to exit the key changing interface.
⑥For devices with iOS13.4 or above, please press and hold the A+HOME key (LED2 flashes quickly) to enter IOS MFi mode, and search the Bluetooth name "DUALSHOCK 4 Wireless Controller" device on your phone, play games in the ShanWan MFi APP game arcade platform;

3.NSwitch Bluetooth mode
①Connecting to the console for the first time: Click 'Controller' → 'Change Grip/Order' on the NSwitch main menu interface to enter the controller pairing mode;
②Press and hold the R2+Switch button simultaneously for 2 seconds. At this time, the LED2 indicator light flashes quickly, and the controller and the console are automatically paired. After the connection is successful, the LED1 light is always on!
③Once connected ,you can press the Switch button directly. LED2 will flash slowly and the connection will be automatically reconnected!

4.P4/P3 console Bluetooth mode
①Connect the controller and console with TYPE-C data cable
②Press the HOME button to pair. After the connection is successful, unplug the data cable.At this time, the LED2 indicator light is always on!
③Once connected,you can press the Switch button directly. LED2 will flash slowlyand the connection will be automatically reconnected!
5. Laptop Bluetooth mode
① Press and hold the R1+Switch button simultaneously for2 seconds. At this time, the LED1 indicator light flashes quickly;
② Turn on Bluetooth on the computer and select the paired Bluetooth device named "Xbox Wireless Controller".The connection is successful and the LED1 indicator light is always on;
③If you play games on the Steam platform, and make sure to check the support option in "Steam-Settings-Controller-Common Controller Settings";

6. Wireless 2.4G mode (requires our receiver):
①2.4G wireless receiver supports: PC equipment/Tesla vehicle system/Switch console dock/smart TV/TV box/PS3 console;
②Insert the 2.4G wireless receiver into the USB interface of the corresponding device above;
③Press the L1+Switch button of the controller at the same time for 2 seconds, the controller enters wireless pairing mode, and the LED1+LED2 indicators flash quickly;
④After the wireless connection is successful, the LED1+LED2 indicators will be on and the game can be started;
⑤When connecting the NSwitch console base, please confirm that 'Pro controller wired connection' is turned on in the system settings of the NSwitch console;

7. Wired mode
①Wired support: PC equipment /Switch console base/PS3 console/smart TV;
②PC wired connection
Use a USB cable to connect the controller and computer. After the connection, LED1 of the controller lights up. At this time, it defaults to X-INPUT mode;
Press and hold the Switch button for 5 seconds to switch to D-INPUT mode. At this time, the controllerLED2 lights up;
It is recommended to play games on the Steam platform and make sure to check the support option in "Steam-Settings-Controller-Common Controller Settings";
③NSwitch wired connection
When connecting the NSwitch base, please confirm that 'Wired connection for Pro controller' is turned on in the system settings ofthe NSwitch console;
Use the provided Type-C cable to connect the controller and NSwitch base. After the connection is successful, the corresponding LED light will be on;
④PS3 console/smart TV wired connection:
Plug in the USB cable and connect it to the PS3 console/smart TV. After the connection, the corresponding LED light on the controller will stay on;

8.TURBO function
① The action keys include (A/B/X/Y/L/ZL/R/ZR) 8 keys, all of which can manually set the TURBO function;
② Setting method: Press and hold the action button, then lightly press the TURBO button to turn on, press and hold the action button, then lightly press the CLEAR button, the TURBO function will be turned off;
③ After the product sleeps, shuts down and restarts, the previously set TURBO function will be automatically cleared. If the TURBO function is enabled, it must be reset;

9. Controller charging/sleep/wake/shutdown functions:
① Controller charging function:
a. When the battery is low, the LED3 indicator light flashes quickly ;
b. When charging, the LED3 indicator lightflashes slowly ;
c. When fully charged, the LED3 indicator light stays on ;
② Controllersleep/wake up/shutdown function:
a.If no button is pressed within 5 minutes, it will automatically sleep;
b.When you need to use it again, press the HOME button for 1 second to wake up the controller and you can reconnect;
c.Under the power-on state, press and hold the HOME button for 5 seconds. The productwill shut down and all LED Indicators will turn off;

Controller parameter

Item	Reference
Working Voltage	DC 3.3-4.2V
Working Current	25mA
Stand-by Current	10-20uA
USB input voltage/current	DC 5V/500mA
Use distance range	≤8M
Battery voltage/capacity	3.7V/300mAh
Battery standby time with fully charged	4-10 hours
Charging time	2 hours
Standby time	30 days

Note: The above parameters are for reference only, please refer to the actual use of the product.

Precautions

1) Please do not store this product in humid or high temperature places.
2) Do not knock, beat, puncture, or attempt to disassemble this product to avoid unnecessary damage to the product.
3) This product is an electronic product, please do not throw it away with garbage.
4) Do not use the controller near fire or other heat sources.
5) Please do not disassemble this product without authorization or by non-professionals. Otherwise, this product will not be covered by the after-sales warranty.

Warranty Card for Game Machine

Productmodel			Date of production	
User name		Telephone	Serial No	
User address	Province	city	Zip code	
Purchase goods			Purchase date	year mouth day
Detailed fault	Note:Please fill out the working condition of the macine when the faultphenomenon, the failure time,the environment and the fault occur			

Maintenance rec	Date	Fault Phenomenon	Processing method	Signature of maintenance personnel

FCC Caution.
(1)§ 15.19 Labelling requirements.
This device complies with part 15 of the FCC Rules. Operation is subject to the following two conditions: (1) This device may not cause harmful interference, and (2) this device must accept any interference received, including interference that may cause undesired operation.
§ 15.21 Changes or modification warning
Any Changes or modifications not expressly approved by the party responsible for compliance could void the user's authority to operate the equipment.
§ 15.105 Information to the user.
Note: This equipment has been tested and found to comply with the limits for a Class B digital device, pursuant to part 15 of the FCC Rules. These limits are designed to provide reasonable protection against harmful interference in a residential installation. This equipment generates uses and can radiate radio frequency energy and, if not installed and used in accordance with the instructions, may cause harmful interference to radio communications. However, there is no guarantee that interference will not occur in a particular installation. If this equipment does cause harmful interference to radio or television reception, which can be determined by turning the equipment off and on, the user is encouraged to try to correct the interference by one or more of the following measures:
-Reorient or relocate the receiving antenna.
-Increase the separation between the equipment and receiver.
-Connect the equipment into an outlet on a circuit different from that to which the receiver is connected.
-Consult the dealer or an experienced radio/TV technician for help.
RF warning for Portable device:
The device has been evaluated to meet general RF exposure requirement. The device can be used in portable exposure condition without restriction.

要把英文折在前面

亚利韦（深圳）科技实业有限公司
受控日期 20240417
受 控 文 件

文件编码：SMS-MG37-ENG/CHN-C99999-V001	
尺寸：60X90MM	材质：80g 书纸
工艺：风琴折 + 对折	
颜色：K	
日期：20240327	