Graphs

Gandini 21044501

Gandini 21044502

Gandini 21044503

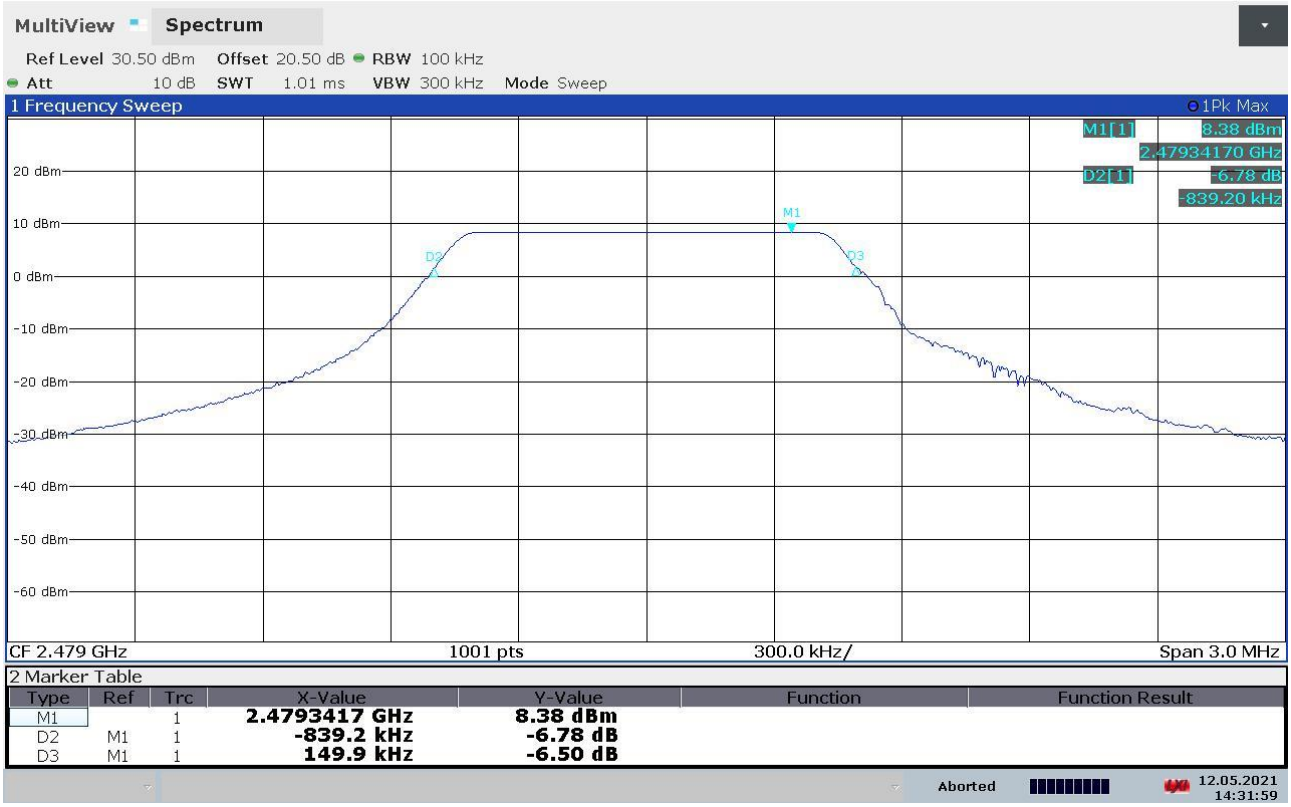

Gandini 21044520

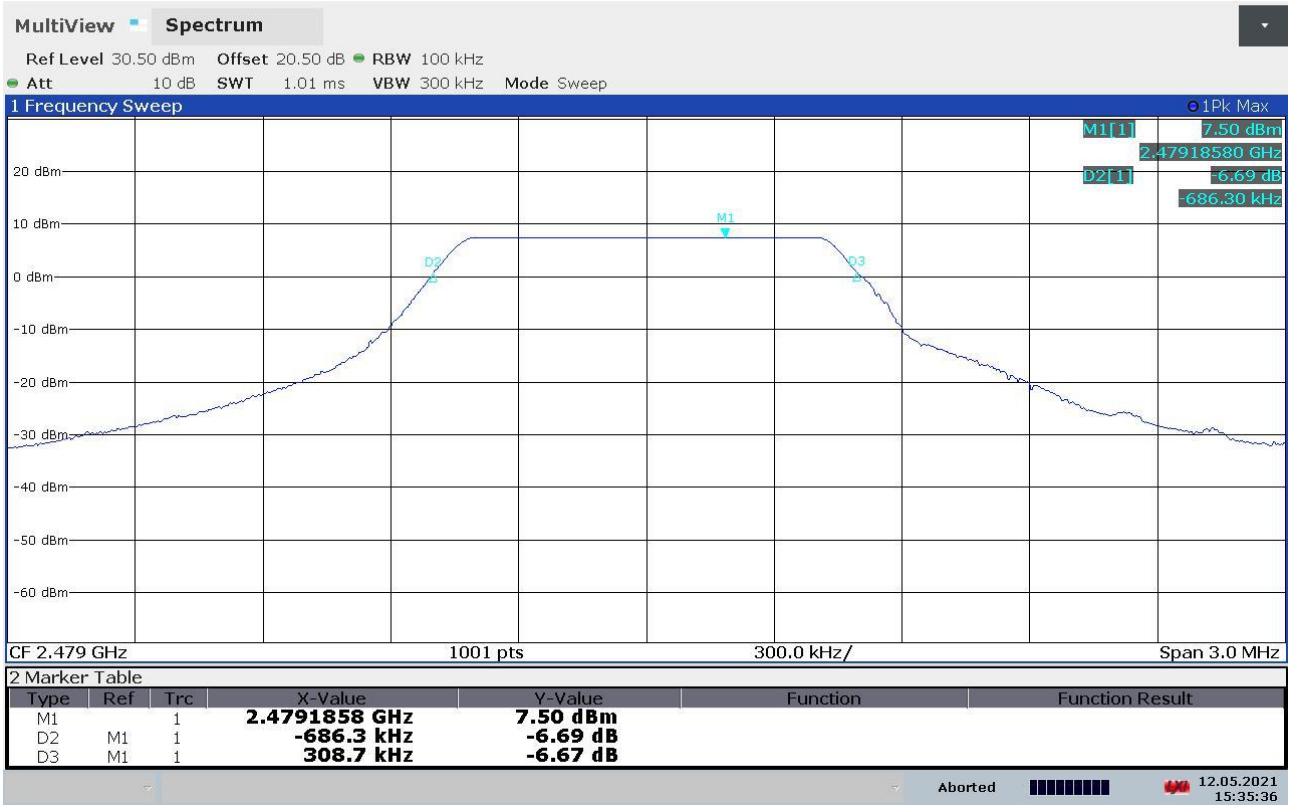

Gandini 21044521

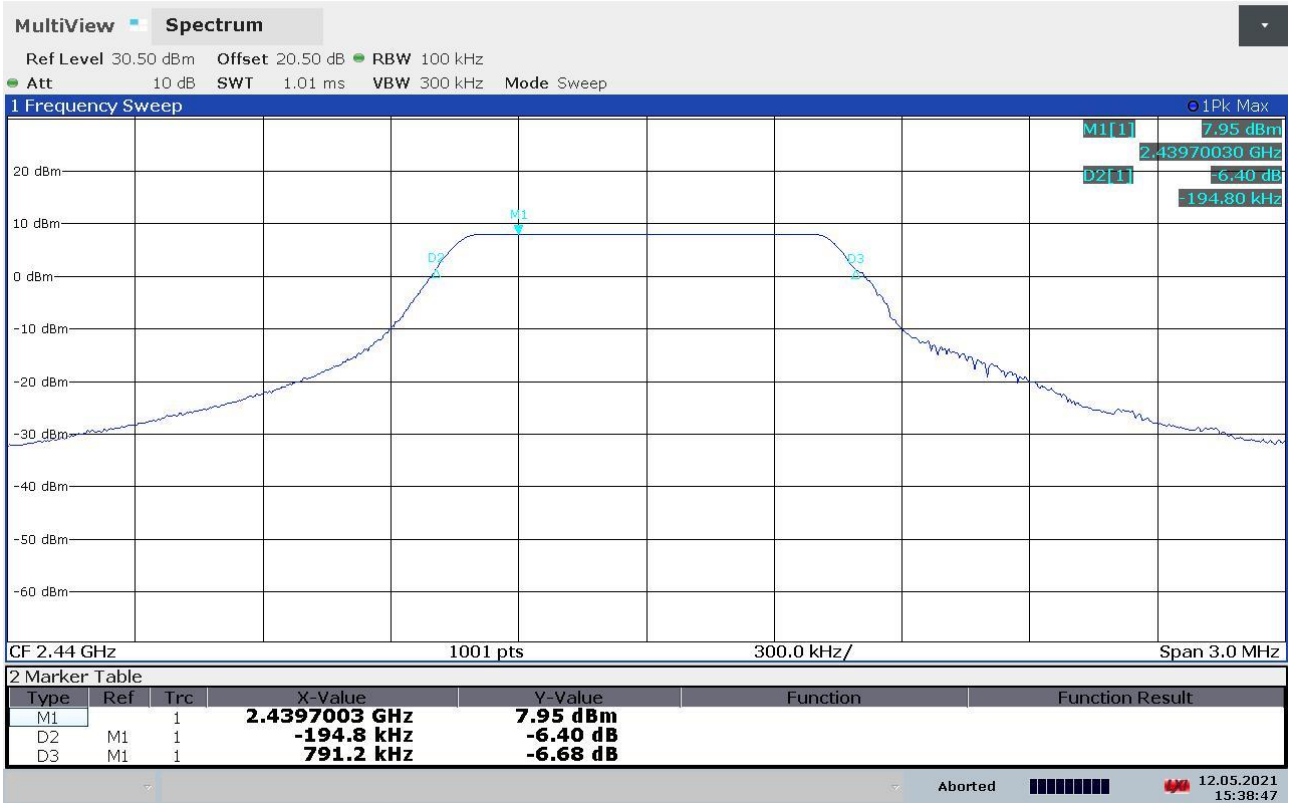

Gandini 21044522

9.4 20 dB bandwidth

Tested by ..... :	G. Gandini
Test date ..... :	13.05.2021
Test location (stand) ..... :	Laboratory
Reference standards ..... :	FCC Rules and Regulation; Titles 47 Part. 15.215 (c) ANSI C63.10 cl. 7.8.7
Supplementary test set-up description ..... :	--
Supplementary information..... :	--

Acceptance limits
Intentional radiators operating under the alternative provisions to the general emission limits, as contained in §§ 15.217 through 15.257 and in subpart E of this part, must be designed to ensure that the 20 dB bandwidth of the emission, or whatever bandwidth may otherwise be specified in the specific rule section under which the equipment operates, is contained within the frequency band designated in the rule section under which the equipment is operated

Test setup

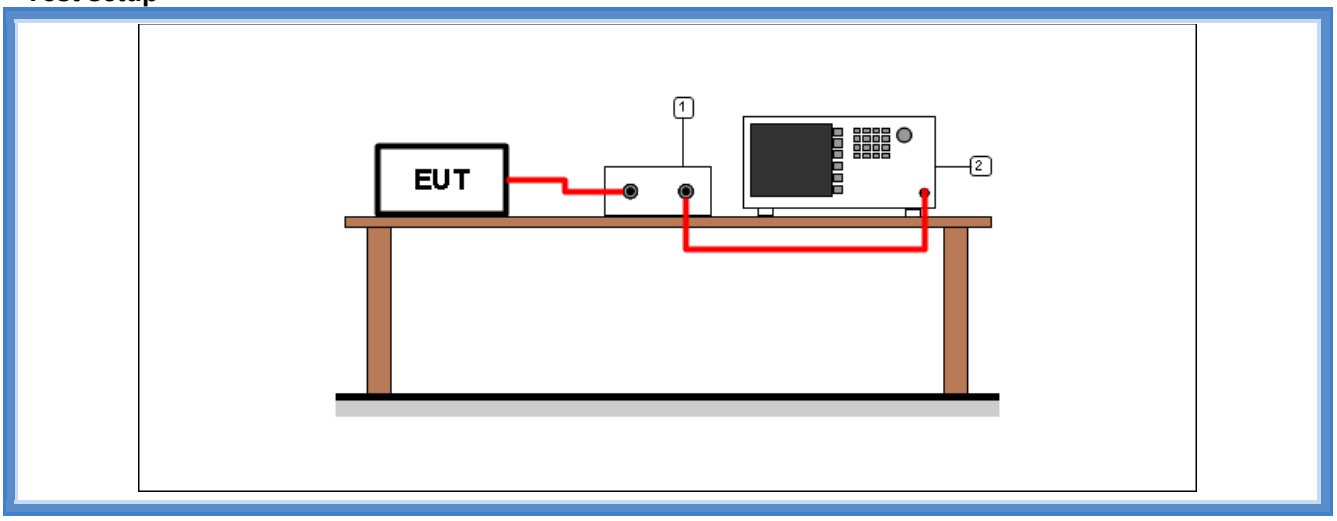

Test setup PR002_01				
Nr.	*Id. Number*	*Manufacturer*	*Model*	*Description*
2	CMC S295	Rohde & Schwarz	FSW43	Spectrum Analyzer 43GHz
1	--	--	--	Cable + attenuator (calibrated before the test)

Result

Chip A

Frequency (MHz)	*Graphs*	*20 dB bandwidth (kHz)*	*Results*
2404	G21044509	941,10	Complies
2440	G21044508	941,10	Complies
2479	G21044507	947,10	Complies

Chip B

Frequency (MHz)	*Graphs*	*20 dB bandwidth (kHz)*	*Results*
2404	G21044528	944,10	Complies
2440	G21044527	944,10	Complies
2479	G21044526	941,10	Complies

Graphs

Gandini 21044507

2 Marker Table

Type	Ref	Trc	X-Value	Y-Value	Function	Function Result
M1		1	**2.4042248 GHz**	**5.51 dBm**		
D2	M1	1	**-701.3 kHz**	**-20.60 dB**		
D3	M1	1	**245.8 kHz**	**-20.78 dB**		

Aborted 12.05.2021 15:04:44

Gandini 21044508

2 Marker Table

Type	Ref	Trc	X-Value	Y-Value	Function	Function Result
M1		1	**2.4402248 GHz**	**5.20 dBm**		
D2	M1	1	**-701.3 kHz**	**-20.72 dB**		
D3	M1	1	**239.8 kHz**	**-20.79 dB**		

Aborted 12.05.2021 15:07:33

Gandini 21044509

Gandini 21044526

Gandini 21044527

Gandini 21044528

9.5 Band edge

Tested by ..... :	G. Gandini
Test date ..... :	12.05.2021
Test location (stand) ..... :	Laboratory
Reference standards ..... :	FCC Rules and Regulation; Titles 47 Part 15.205, 15.209, 15.247 (d) ANSI C63.10 cl. 11.11.1 and 11.12.1 KDB 558074 D01 DTS Meas Guidance v05r02 cl. 8.7
Supplementary test set-up description ..... :	--
Supplementary information..... :	--

Acceptance limits
In any 100 kHz bandwidth outside the frequency band in which the spread spectrum or digitally modulated intentional radiator is operating, the radio frequency power that is produced by the intentional radiator shall be at least 20 dB below that in the 100 kHz bandwidth within the band that contains the highest level of the desired power, based on either an RF conducted or a radiated measurement, provided the transmitter demonstrates compliance with the peak conducted power limits. If the transmitter complies with the conducted power limits based on the use of RMS averaging over a time interval, as permitted under paragraph (b)(3) of this section, the attenuation required under this paragraph shall be 30 dB instead of 20 dB. Attenuation below the general limits specified in § 15.209(a) is not required. In addition, radiated emissions which fall in the restricted bands, as defined in §15.205(a), must also comply with the radiated emission limits specified in § 15.209(a) (see § 15.205(c)).

Operation within the band 2400 – 2483,5 MHz

Test setup

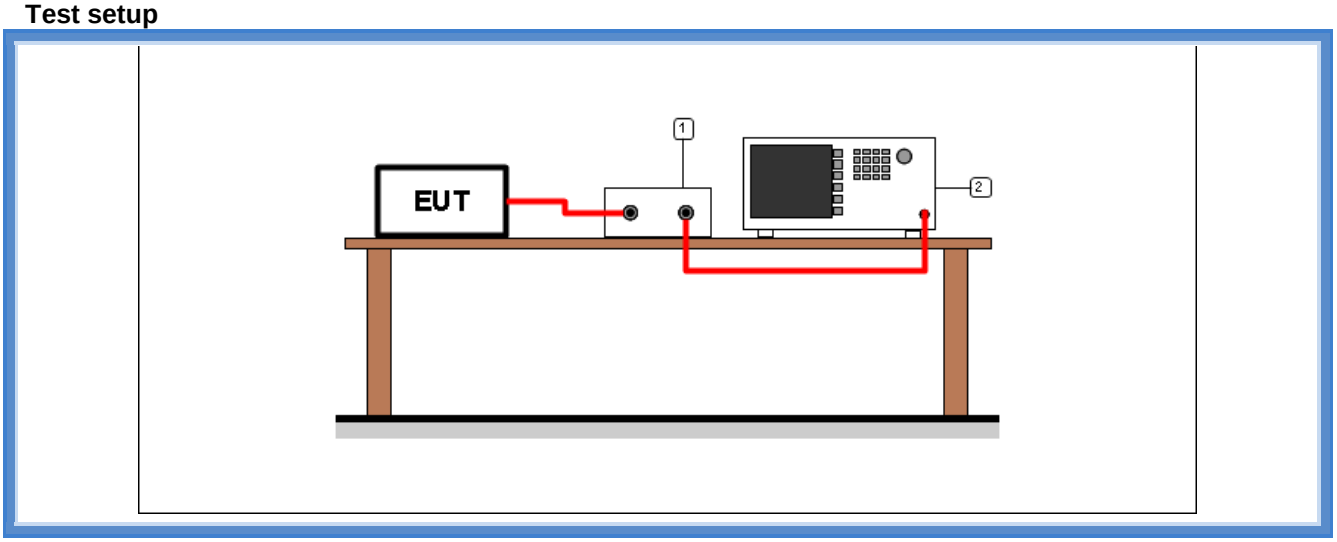

Test setup PR002_01				
Nr.	*Id. Number*	*Manufacturer*	*Model*	*Description*
2	CMC S295	Rohde & Schwarz	FSW43	Spectrum Analyzer 43GHz
1	--	--	--	Cable + attenuator (calibrated before the test)

Result

Chip A

Frequency (MHz)	*Bandwidth*	*Graph(s)*	*Results*	
2404	100 kHz	G21044513	2403,141 MHz	Complies
2404	1 MHz	G21044565	--	*
2479	1 MHz	G21044570	2482,181 MHz	Complies
2479	1 MHz	G21044571	--	**

*: this graph shows the emissions in 2310 – 2390 MHz restricted band
**: this graph shows the emissions in 2483,5 – 2500 MHz restricted band

Chip B

Frequency (MHz)	*Bandwidth*	*Graph(s)*	*Results*	
2404	100 kHz	G21044529	2403,370 MHz	Complies
2404	1 MHz	G21044579	--	*
2479	1 MHz	G21044573	2482,256 MHz	Complies
2479	1 MHz	G21044572	--	**

*: this graph shows the emissions in 2310 – 2390 MHz restricted band
**: this graph shows the emissions in 2483,5 – 2500 MHz restricted band

Graphs

Gandini 21044513

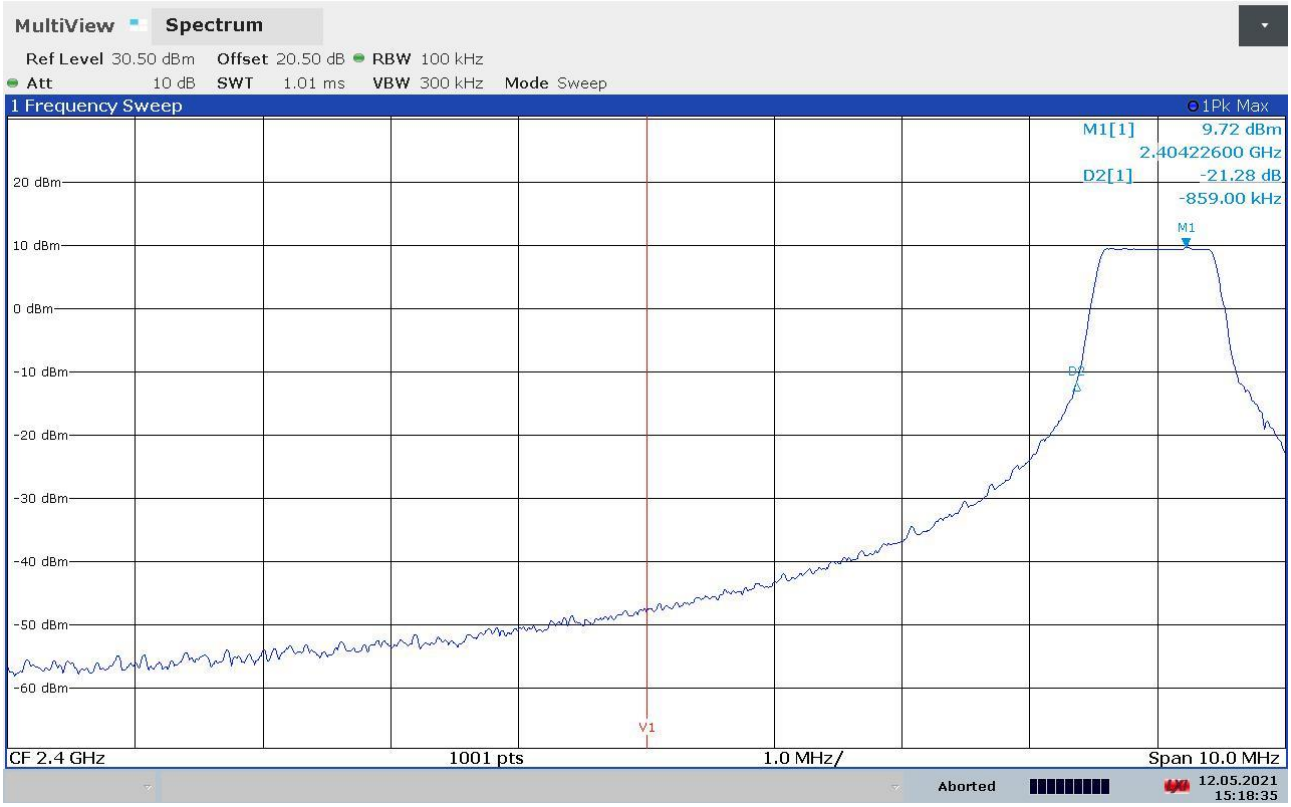

Gandini 21044529

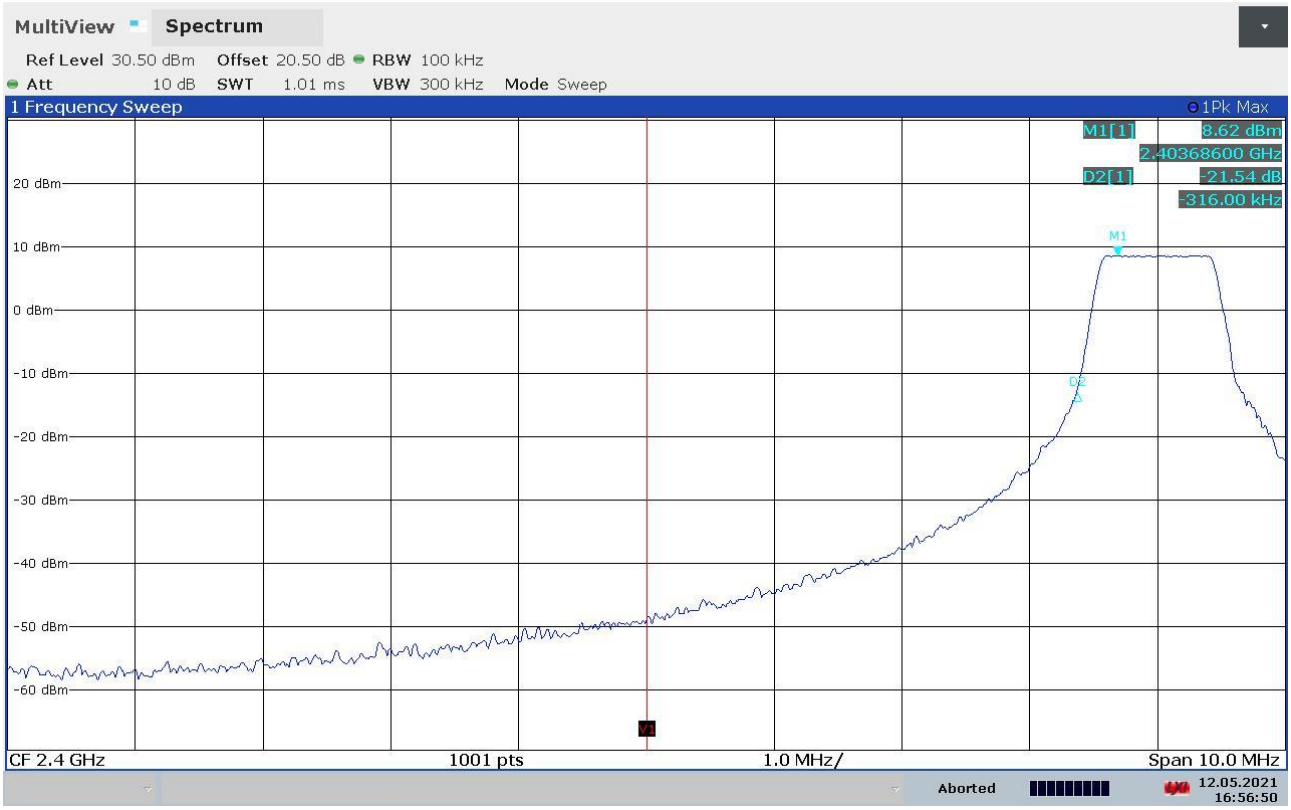

Gandini 21044565

Gandini 21044570

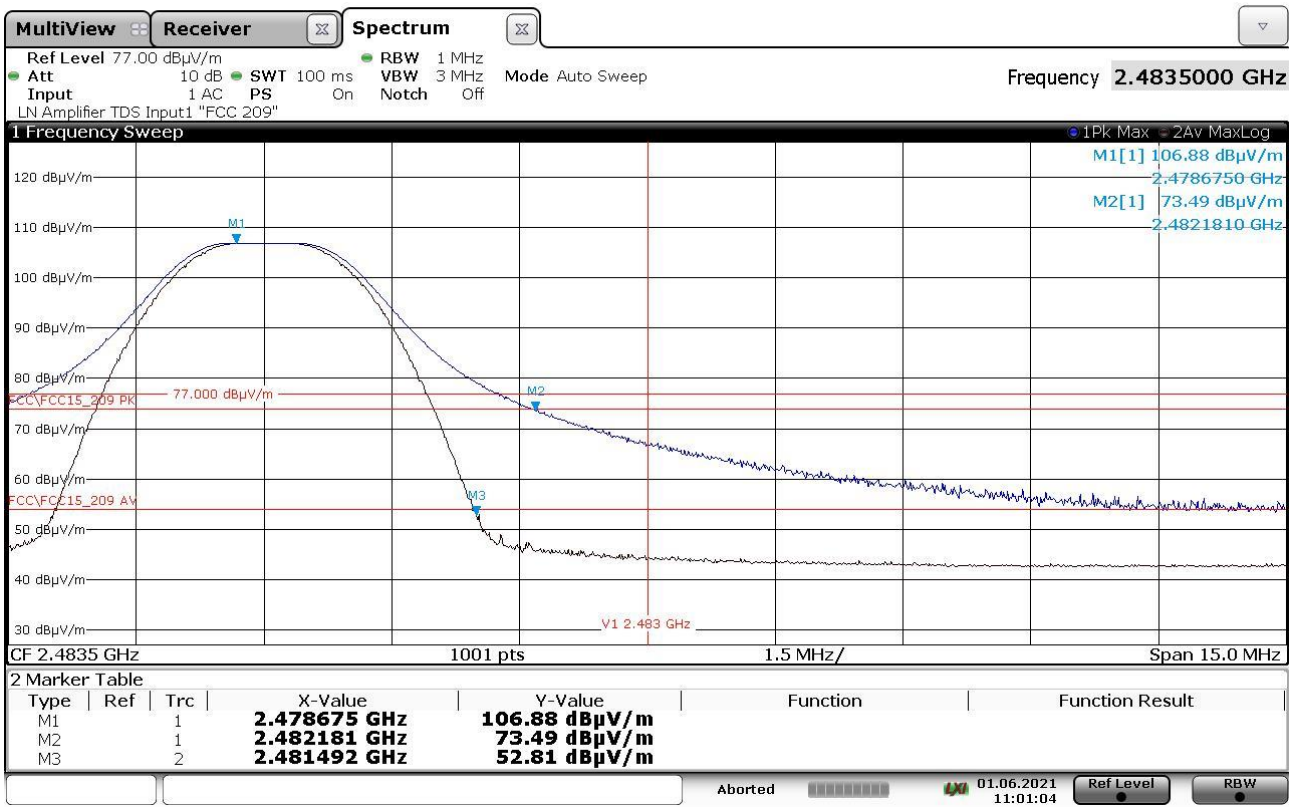

Gandini 21044571

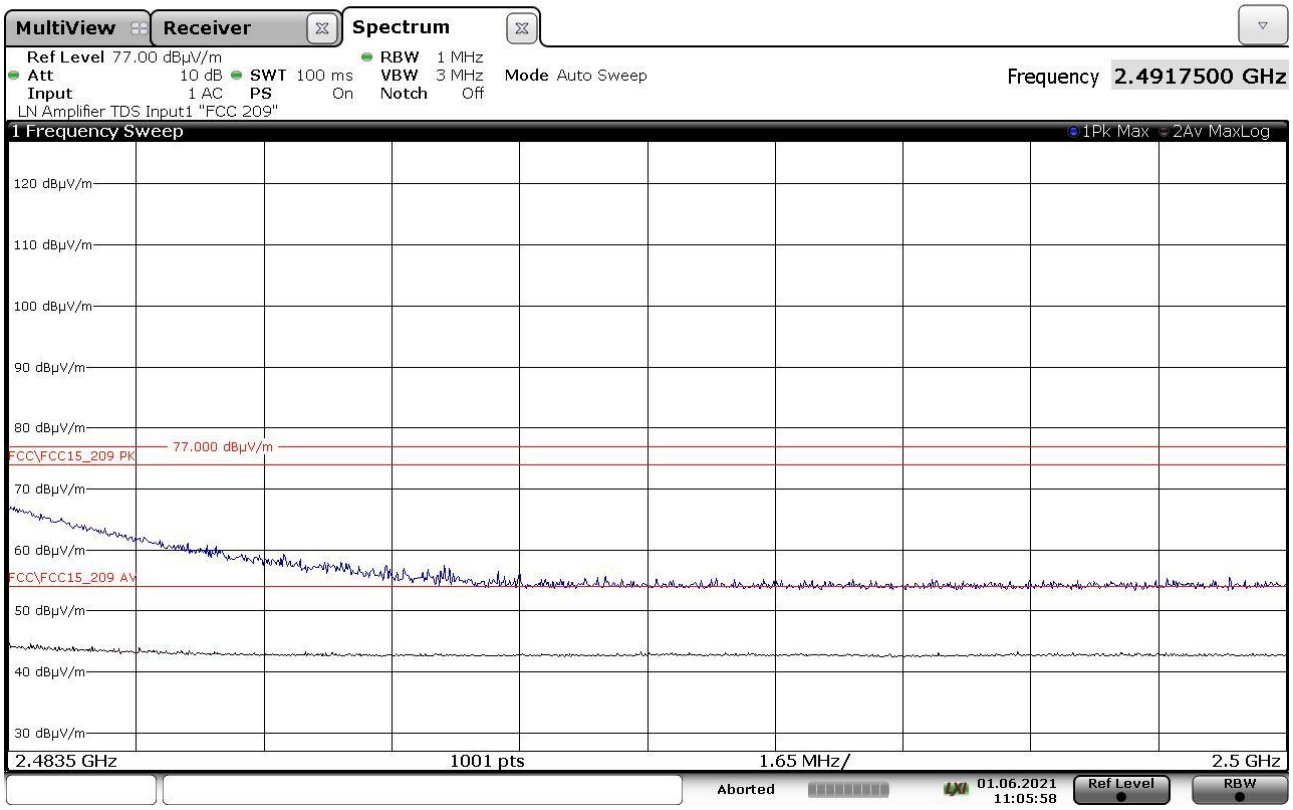

Gandini 21044572

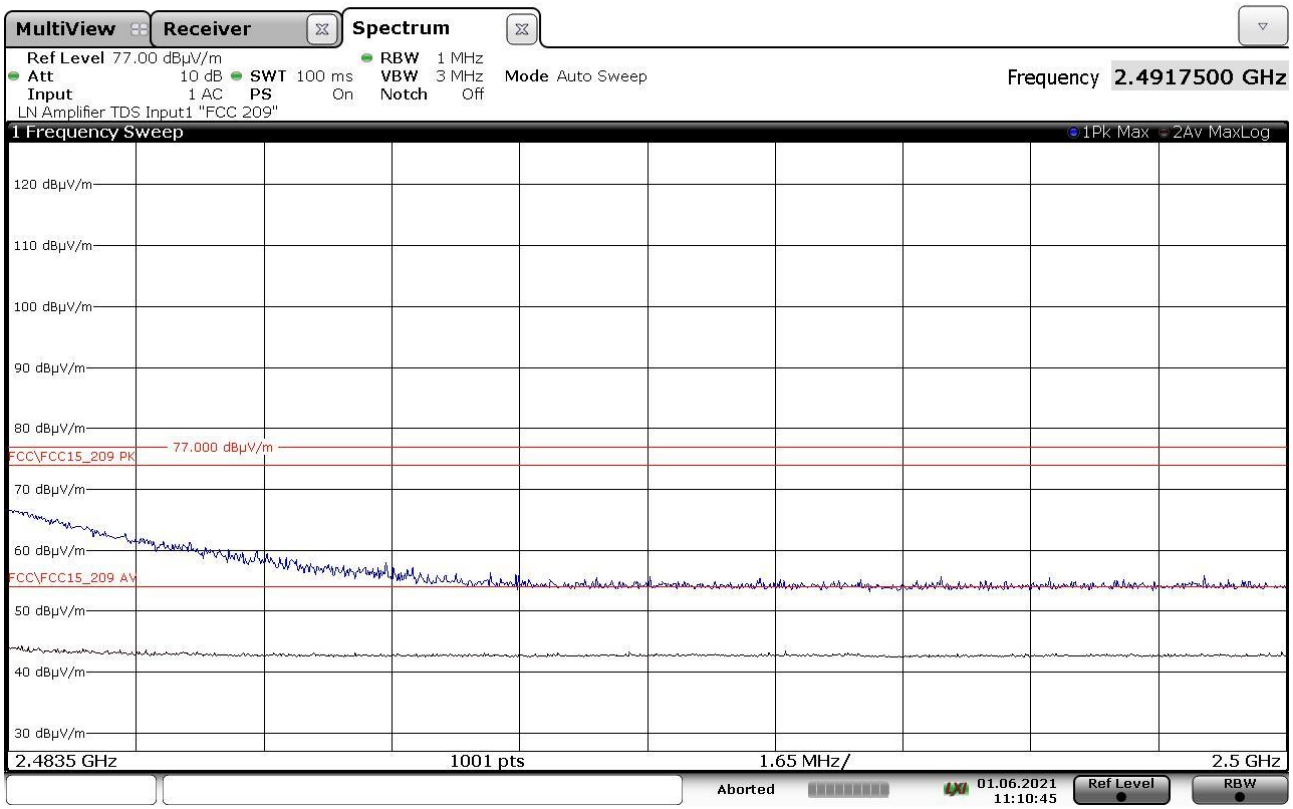

Gandini 21044573

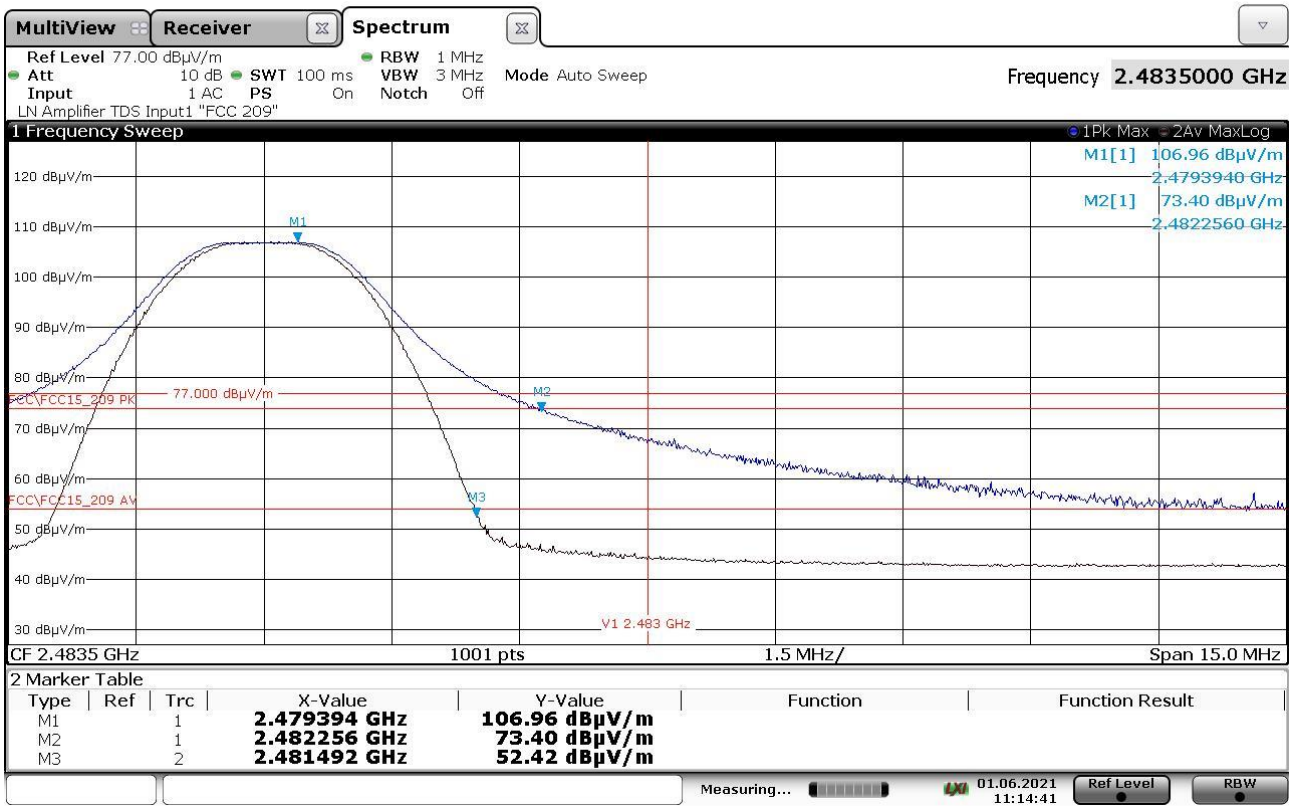

Gandini 21044579

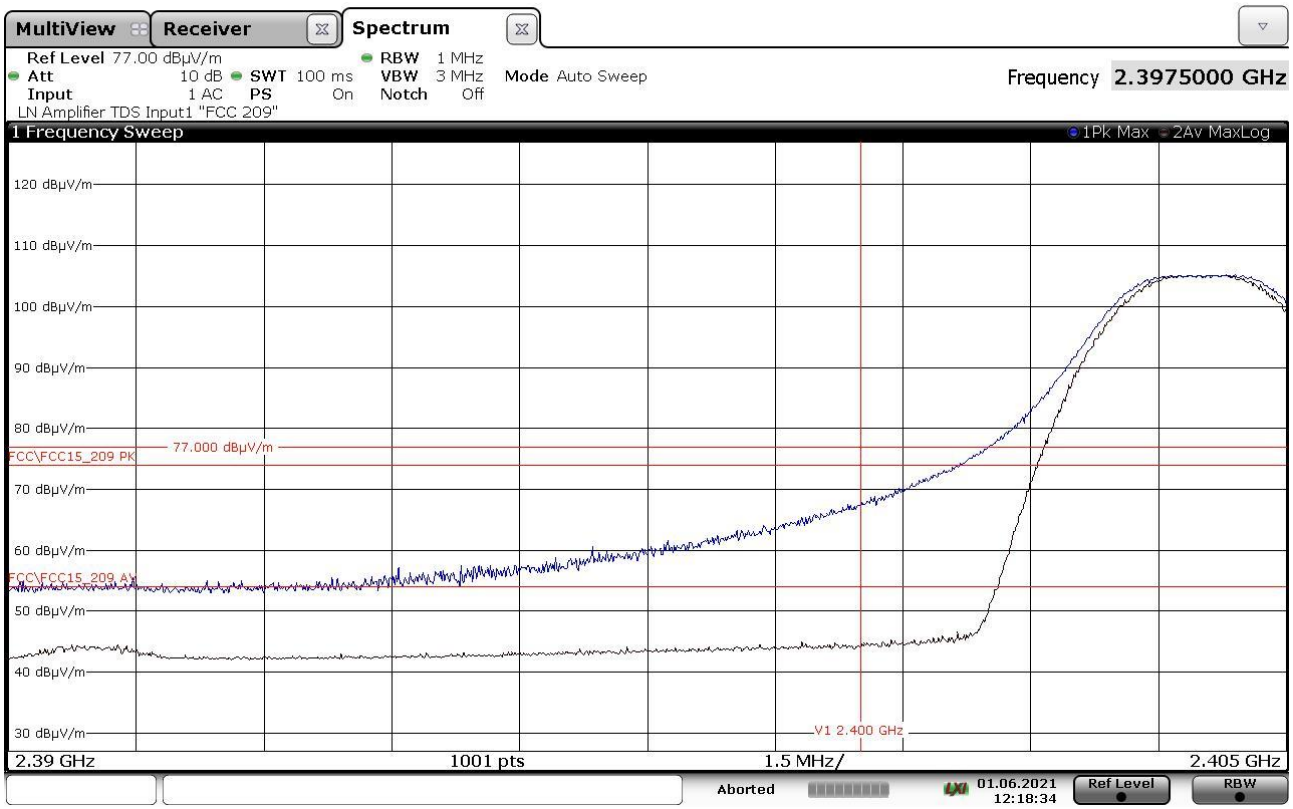

9.6 Fundamental emission output power

Tested by ..... :	G. Gandini
Test date ..... :	12.05.2021
Test location (stand) ..... :	Laboratory
Reference standards ..... :	FCC Rules and Regulation; Titles 47 Part 15.247 (b) (3) ANSI C63.10 cl. 11.9.1.1 KDB 558074 D01 DTS Meas Guidance v05r02 cl. 8.3.1.1
Supplementary test set-up description ..... :	--

Acceptance limits
For systems using digital modulation in the 902–928 MHz, 2400–2483.5 MHz, and 5725–5850 MHz bands: 1 Watt

Test setup

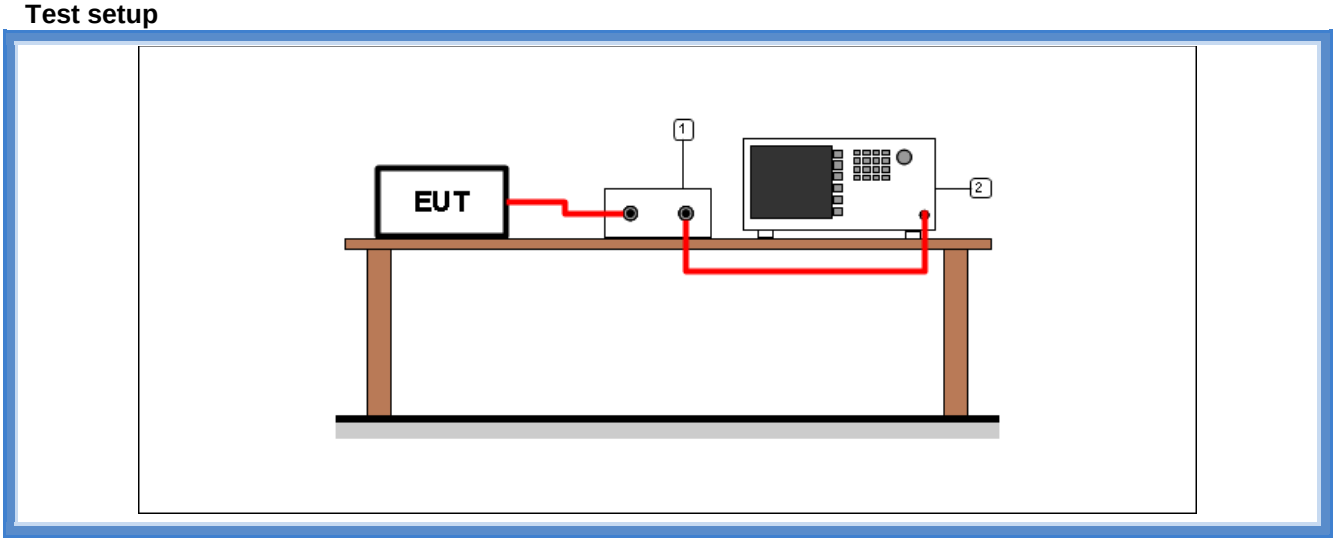

Test setup PR002_01				
Nr.	*Id. Number*	*Manufacturer*	*Model*	*Description*
2	CMC S295	Rohde & Schwarz	FSW43	Spectrum Analyzer 43GHz
1	--	--	--	Cable + attenuator (calibrated before the test)