THINKRIDER

POWER TRAINER A1

INSTRUCTIONS

Please add the personnel of customer service on WeChat for more technical support.

The company reserves the right to interpret the above content.
(Please refer to the relevant content of WeChat official account of ThinkRider)

Wuxi ThinkRider Technology Co.,Ltd.
www.thinkrider.com

1.Product introduction

Thank you for purchasing the ThinkRider A1 Bike Trainer.
Please read the instructions carefully before use.

- Construction: steel triangle type
- Power accuracy : ±3%
- Wireless connection: ANT+(connect to PC), bluetooth 4.0(connect to smartphones and tablets)
- Device system: IOS/Android/Windows
- Drive type: direct drive
- Application: cycling simulation
- Weight: about 15kg
- Simulated slope: fixed 3%
- Maximum resistance power: about 1200 watts
- Noise level :58 db (@1.0m& 30KPH)
- Warranty period:1 year
- Battery: CR 2032

Bicycle adaptation

- Rim size:Road bike:650c /700c, MTB:24"/26"/29"
- Hub type:130/135QR,12x142 and 12x148 thru axle (optional)
- Cassettes:Shimano / SRAM 8,9,10,11 Speed
- Software adaptation:Powerfun,Rouvy,Zwift,PerfPRO,ONELAP,etc.

* Due to the rapid upgrades of third party software,we will not notify you of adaptation changes of third-party software.

2. Product composition

① A1 smart trainer *1

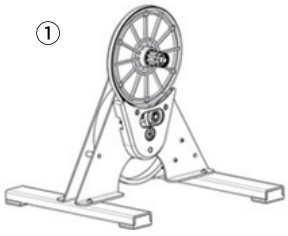

② Quick release level *1

③ Quick release converter *1
(Compatable with 130/135mm Q.R.)

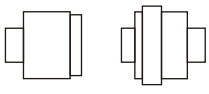

Note:1.Products and accessories may be changed due to different batches. Please refer to the actual products.

2.Please keep the box and foam for future transportation and storage.

3.Trainer Installation

1. Place the trainer on a level surface,install two horizontal feet.
2. Note that the length of the two feet is not the same, left and right direction can not be installed in the opposite direction. Refer to the top view below.
3. There is a freehub on the cycling trainer,which supports the standard shimano and sram 8-11 speed cassettes
4. Install your bike on the trainer,just like install the rear wheel on the bike.
5. The installation method of Q.R./Thru Axle converters is shown below.
6. Make sure your bike is LOCKED to the trainer,in case it comes loose and causes harm.

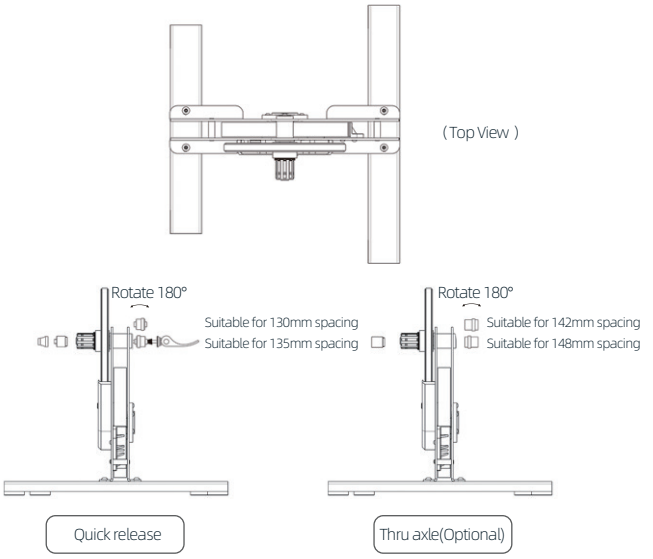

Make sure your bike is LOCKED.

4. Caveat

- Do not let children and pets get close to the bike trainer.
- Please use the trainer on a stable ground.
- Please consult your doctor before starting or modifying any exercise program.
- Do not touch the moving parts of the trainer with your hands or objects.
- The flywheel will generate high temperatures after using for a long time. Do not touch it.
- Do not touch the flywheel or disassemble the bicycle while the flywheel is still rotating.
- Be careful when standing on the trainer.
- Keep the trainer away from fire, water and other obstacles.
- It is strictly forbidden for people with heart or brain diseases and other users who are not suitable for high-intensity exercise to use the trainer.
- Users who are not responsible for their own behavior should not use the trainer.

5.Special remind

1. ThinkRider A1 is a direct-drive trainer of pure power meter. When you're using all kinds of cycling software (Such as Zwift,Powerfun App), on the connect device page,you need to select the connection "power meter" or "power equipment", please don't choose Smart trainer options.
2. A1 trainer don't need calibration.
3. Trainer A1 firmware upgrade tool:

   For iPhone, download the app from the App Store: Thinkrider tools

   For Androids, please download the app from Google Play: Thinkrider tools
4. If the belt skids, it should be tightened according to the videos. (The belt is consumption items,it is recommended to replace it once a year.)
5. Please pay attention when installing the horizontal bracket. There is a difference between front and back and left and right.

6.Warranty

a) The product is guaranteed for one year. If the product fails during the warranty period and the failure is casused by original device quality problem or assembly process,the company will provide free maintenance and spare parts replacement.

b) If it needs to be sent back for repair, the freight shall be borne by the customer. (Please use the original packing materials when you need to ship the package.)

c) Product damage or malfunction caused by the following reasons is not covered by the warranty.

1. Damage caused by use or installation in accordance without the instructions.
2. Product damage caused by human factors or accident.
3. If you have not contacted the company or the dealer to confirm and disassemble the product yourself without authorization.
4. Ingress of water causes equipment failure.
5. Aging and scratches caused by normal use.

* After the expiration of the warranty period, the company will still provide maintenance services, but the corresponding maintenance costs are charged.

FCC Statement

NOTE: This equipment has been tested and found to comply with the limits for a Class B digital device, pursuant to part 15 of the FCC Rules. These limits are designed to provide reasonable protection against harmful interference in a residential installation. This equipment generates uses and can radiate radio frequency energy and, if not installed and used in accordance with the instructions, may cause harmful interference to radio communications. However, there is no guarantee that interference will not occur in a particular installation. If this equipment does cause harmful interference to radio or television reception, which can be determined by turning the equipment off and on, the user is encouraged to try to correct the interference by one or more of the following measures:

- Reorient or relocate the receiving antenna.
- Increase the separation between the equipment and receiver.
-Connect the equipment into an outlet on a circuit different from that to which the receiver is connected.
-Consult the dealer or an experienced radio/TV technician for help

Changes or modifications not expressly approved by the party responsible for compliance could void the user's authority to operate the equipment.

This device complies with Part 15 of the FCC Rules. Operation is subject to the following two conditions:
(1) this device may not cause harmful interference, and (2) this device must accept any interference received, including interference that may cause undesired operation.