SMART BIKE TRAINER X5

THINK RIDER

THINKRIDER

Recommend cycling software:POWERFUN

www.powerfun.com

Wuxi ThinkRider Technology Co.,Ltd.
Made in Wuxi,Jiangsu,China
Tel:0510-85184498
www.thinkrider.com

1.Product introduction

Thank you for purchasing the ThinkRider X5
Please read the instructions carefully before use.

Technical specifications

- Structure: Steel material
- Package size: 565*555*245mm
- Package weight: 23kg
- Resistance type: electromagnetic damping
- Drive type: direct drive
- Maximum simulated slope: 15%
- Wireless connection: ANT+(connect to PC), bluetooth 4.0(connect to smartphones and tablets)
- Maximum resistance power: about 2000 watts
- Power accuracy : ±2%
- Noise level :62 db (@1.0m& 30KPH)
- Power supply: 50-60hz 100-240v ~ 1.5A

Adaptation instruction

- Rim size :Road bike:24/ 650c /700c, MTB:24"/26"/650B/29"
- Hub type:130/135QR(Standard),12x142 and 12x148 thru axle(Optional)
- Cassettes:Shimano / SRAM 8,9,10,11 Speed(XDR/CP optional)
- Software adaptation:Powerfun,Zwift,PerfPRO,etc.

Cycling app recommend

- POWERFUN Cycling app download on: www.powerfun.com

* Due to the rapid upgrades of third party software,we will not notify you of adaptation changes of third-party software.

2. Product composition

X5 Smart bike trainer *1

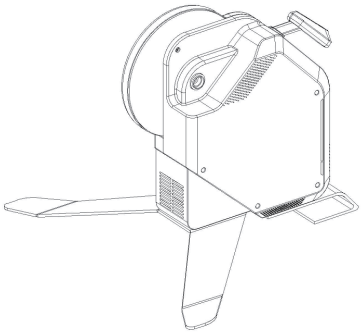

Front wheel pad*1

Power adapter *1

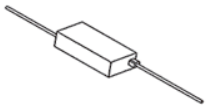

Quick release *1

8-9-10 speed washer *1

Quick release converters*2
(Support 130/135QR)

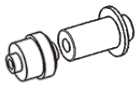

Special note:
The standard accessories don't include the cassette,ANT+ USB receiver,
Thru Axle converters,If you need these,you can buy them separately from your dealer.

3.Trainer Installation

1. Place the trainer on a level surface,ensure that there are no obstacles or dangerous objects around.
2. Install the base and tighten the screws to make sure the trainer is stable.

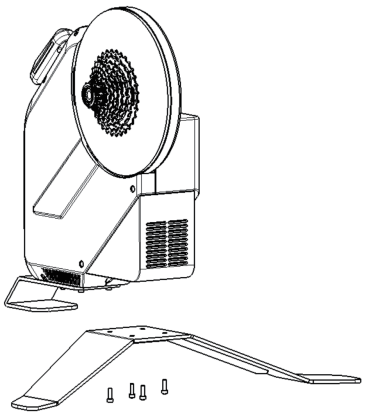

3. Connect the trainer to a standard 110v-220v power outlet with the original power adapter.
4. The standard freehub on the trainer is Shimano HG type,which compatible with the normal Shimano/Sram 8-11 speed cassette.
(NOTE: 11s cassette can be directly installed,8-10s cassette may need the spacer.)
(NOTE: The cassette is not included in the standard accessories.)

5. Please follow the instructions below to install the converters.

NOTICE: The non-drive side converter can be inserted in different directions to suitable for different sizes of axle opening.See the picture below.

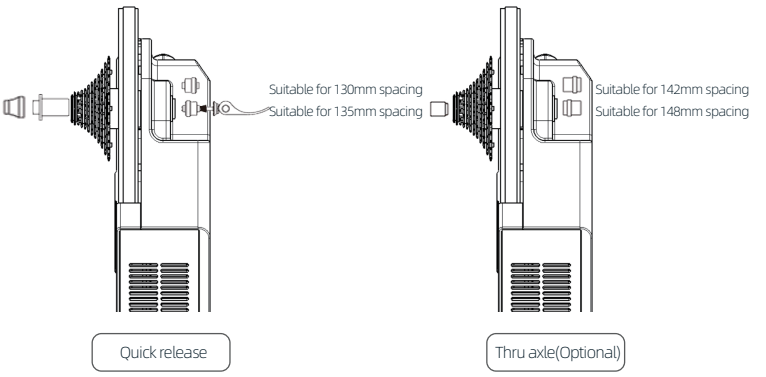

Please make sure the Quick Release level or the Thru Axle is securely locked.

* The 142mm and 148mm Thru Axle converters are not included in the standard accessories,If you use a disc brake bike,you need to purchase the converters separately from your dealer.

* The Campagnolo/XDR freehub is also an optional item that you can purchase from the dealer if you use CP 9-12s or SRAM XDR/XD groupset.

4. Caveat

- Do not let children and pets get close to the bike trainer.
- Please use the trainer on a stable ground.
- Please consult your doctor before starting or modifying any exercise program.
- Do not touch the moving parts of the trainer with your hands or objects.
- The flywheel will generate high temperatures after using for a long time. Do not touch it.
- Do not touch the flywheel or disassemble the bicycle while the flywheel is still rotating.
- Be careful when standing on the trainer.
- Keep the trainer away from fire, water and other obstacles.
- It is strictly forbidden for people with heart or brain diseases and other users who are not suitable for high-intensity exercise to use the trainer.
- Users who are not responsible for their own behavior should not use the trainer.

5.Firmware upgrade and software setting

· The firmware update

The cycling trainer can be firmware upgraded.
For firmware updates, please download the app on your mobile phone: thinkrider tools (please use your smartphone and download the app from the official website.)
(Website: www.thinkrider.com)

ⓘ Special note: during the upgrade, please keep the phone within 1 meter of the cycling trainer.Do not exit the upgrading interface, do not carry out any other operation, and do not turn off the power of the cycling trainer until the firmware upgrade is completed.

· Calibration

The trainer has been calibrated before delivery, so calibration is not necessary for normal use.
If riding more than 5000 km, or if the belt is seriously skidding, please calibrate according to the official video.

· Cycling APP Settings

This trainer is a general equipment, can adapt to most of the standard agreement of third-party cycling software.After downloading and installing the cycling software on your cellphone or computer, switch on the power of the trainer, open the software, find the device connection interface in the software,search and connect the "cycling trainer".

6.Warranty

a) The product is guaranteed for one year. If the product fails during the warranty period and the failure is casused by original device quality problem or assembly process,the company will provide free maintenance and spare parts replacement.

b) Please use the original packing materials when you need to ship the package.

c) Product damage or malfunction caused by the following reasons is not covered by the warranty.

1. Damage caused by use or installation in accordance without the instructions.
2. Product damage caused by human factors or accident.
3. If you have not contacted the company or the dealer to confirm and disassemble the product yourself without authorization.
4. Ingress of water causes equipment failure.
5. Aging and scratches caused by normal use.

* After the expiration of the warranty period, the company will still provide maintenance services, but the corresponding maintenance costs are charged.

FCC Statement

NOTE: This equipment has been tested and found to comply with the limits for a Class B digital device, pursuant to part 15 of the FCC Rules. These limits are designed to provide reasonable protection against harmful interference in a residential installation. This equipment generates uses and can radiate radio frequency energy and, if not installed and used in accordance with the instructions, may cause harmful interference to radio communications. However, there is no guarantee that interference will not occur in a particular installation. If this equipment does cause harmful interference to radio or television reception, which can be determined by turning the equipment off and on, the user is encouraged to try to correct the interference by one or more of the following measures:

- Reorient or relocate the receiving antenna.
- Increase the separation between the equipment and receiver.
-Connect the equipment into an outlet on a circuit different from that to which the receiver is connected.
-Consult the dealer or an experienced radio/TV technician for help

Changes or modifications not expressly approved by the party responsible for compliance could void the user's authority to operate the equipment.

This device complies with Part 15 of the FCC Rules. Operation is subject to the following two conditions:
(1) this device may not cause harmful interference, and (2) this device must accept any interference received, including interference that may cause undesired operation.